**RIVERBEND LANDFILL COMPANY**
13469 SW Highway 18
McMinnville, OR 97128
(503) 472-8788
(503) 434-9770 Fax

December 2, 2014

Mr. Bob Schwarz
Oregon Department of Environmental Quality
Eastern Region
400 E. Scenic Drive, Suite 307
The Dalles, Oregon 97058

**SUBJECT: Submittal of Updated Environmental Monitoring Plan**
**Riverbend Landfill Solid Waste Disposal Site Permit (SWDP) No. 345,**
**Yamhill County, Oregon**

Dear Mr. Schwarz:

Please find enclosed a copy of the update environmental monitoring plan (EMP) for the Riverbend Landfill (RL), prepared by SCS Engineers (SCS), of Portland, Oregon at the request of the Riverbend Landfill Company (RLC). The EMP was updated based on Oregon Department of Environmental Quality's (DEQ's) review comments of the July 30, 2013 EMP that were addressed in SCS's response letter dated June 10, 2014 and subsequently approved by the DEQ in a letter dated October 6, 2014.

If you have any questions related to the contents of the update EMP, please contact me at (602) 757-3352.

Sincerely,
Riverbend Landfill Company

James Denson
Environmental Protection Manager

Enclosure – Riverbend Landfill's Update EMP

Cc (w/enclosure): Audrey Eldridge, DEQ
Louis Caruso, SCS
RL Technical Files

Cc (wo/enclosure): Jeff O'Leary, WM
Mark Verwiel, WM
Tim Watson, WM
Frank Willmann, WM

SCS ENGINEERS









# Environmental Monitoring Plan

**Riverbend Landfill**
**Yamhill County, Oregon**

Prepared for:

Riverbend Landfill Company
13469 SW Highway 18
McMinnville, OR 97128
(503) 472-8788

WASTE MANAGEMENT

Prepared by:

**SCS ENGINEERS**
14945 SW Sequoia Parkway, Suite 180
Portland, OR 97224
(503) 636-9201

December 2, 2014
File No. 04208022.14

**Offices Nationwide**
**www.scsengineers.com**

SCS ENGINEERS



# Environmental Monitoring Plan

**Riverbend Landfill**
**Yamhill County, Oregon**

Prepared for:

Riverbend Landfill Company
13469 SW Highway 18
McMinnville, OR 97128
(503) 472-8788

WASTE MANAGEMENT

Prepared by:

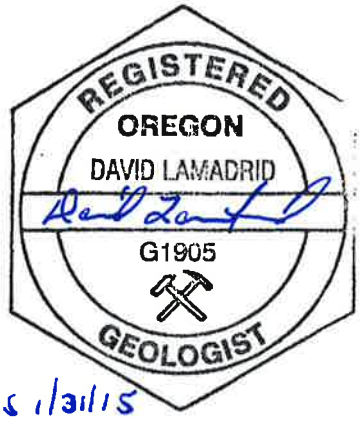


Expires 1/31/15

**SCS ENGINEERS**
14945 Sequoia Parkway, Suite 180
Portland, OR 97224
(503) 639-9201

December 2, 2014
File No. 04208022.14

Offices Nationwide
www.scsengineers.com

**David Lamadrid, R.G.**
**Senior Project Geologist**
**SCS ENGINEERS**

**Louis Caruso**
**Project Director/Vice President**
**SCS ENGINEERS**

# Table of Contents

**Section** **Page**

List of Tables ..... v
List of Figures ..... v
List of Appendices ..... vi
Acronyms and Abbreviations ..... vi
Update Synopsis ..... ix
1.0 Overview ..... 1
1.1 Introduction ..... 1
1.2 Subtitle D Context ..... 1
1.3 State-Specific Regulations, Permits, and Guidance Documents, and Agreements 2
1.3.1 State of Oregon Regulations and Guidance ..... 2
1.3.2 Permits ..... 2
1.4 Report Organization ..... 3
2.0 Hydrogeologic Setting ..... 5
2.1 Introduction ..... 5
2.2 Regional Geology ..... 5
2.3 Site Geology ..... 5
2.3.1 Eocene-Age Deposits ..... 5
2.3.2 Pliocene-Age Deposits ..... 6
2.3.3 Quaternary-Age Deposits ..... 6
2.4 Site Hydrogeology ..... 6
2.4.1 Upper Silt-Clay Water-Bearing Zone ..... 7
2.4.2 Lower Sand-Gravel Water-Bearing Zone ..... 7
2.4.3 Vertical Hydraulic Gradients ..... 8
2.5 Groundwater Chemistry ..... 8
2.5.1 Upper Silt-Clay Water-Bearing Zone ..... 8
2.5.2 Lower Sand-Gravel Water-Bearing Zone ..... 9
2.5.3 Preliminary Assessment Findings ..... 9
3.0 Groundwater Monitoring ..... 11
3.1 Introduction ..... 11
3.2 Monitoring Network ..... 11
3.2.1 Compliance Wells ..... 11
3.2.2 Detection Wells ..... 12
3.2.3 Groundwater Elevation Monitoring Locations ..... 12
3.2.4 Future Modifications to Groundwater Monitoring Network ..... 12
3.3 Historical (Background) Monitoring ..... 13
3.4 Selection of Parameters for long-term compliance monitoring ..... 13
3.4.1 Approach and Objectives ..... 14
3.4.2 Volatile Organic Compounds ..... 15
3.4.3 Site-Specific Leachate Inorganic Parameters ..... 15
3.4.4 Parameter Redundancy ..... 16

3.4.5 Concentration Contrast Between Water Quality (Background) and Leachate .. 17
3.4.6 Parameter Mobility ..... 18
3.4.7 Parameter Persistence ..... 19
3.4.8 Summary of Site-Specific Inorganic Parameters Selected for Long-Term Monitoring ..... 19
3.4.9 Supplemental Geochemical Parameters ..... 19
3.4.10 Five –Year Comprehensive Monitoring Event ..... 20
3.5 Monitoring Schedule ..... 20
4.0 Primary Leachate and Secondary Collection System Liquid Monitoring ..... 22
4.1 Introduction ..... 22
4.2 Primary Leachate and Secondary Collection Systems ..... 22
4.3 LCRS and LSCS Monitoring ..... 23
4.3.1 LCRS Leachate ..... 23
4.3.2 LSCS Liquid ..... 23
4.3.3 Monitoring Locations ..... 23
4.3.4 Monitoring Schedule and Parameters ..... 24
4.4 Leachate Management ..... 24
5.0 Surface Water Monitoring ..... 25
5.1 Introduction ..... 25
5.2 Monitoring Network ..... 25
5.3 Monitoring Schedule and Parameters ..... 25
5.3.1 Surface Water Quality ..... 25
6.0 Stormwater Monitoring ..... 26
7.0 Landfill Gas Monitoring ..... 27
8.0 Air Quality Monitoring ..... 28
9.0 Visual Inspection ..... 29
10.0 Sampling and Analysis Plan ..... 30
11.0 Data Review and Evaluation ..... 31
11.1 Introduction ..... 31
11.2 Review of Laboratory QA/QC Results ..... 31
11.2.1 QA/QC Review ..... 31
11.2.2 Review for Outliers/Anomalies ..... 32
11.3 Groundwater Quality Standards and Data Evaluation for Compliance Monitoring Wells 33
11.3.1 Establishing Concentration Limits for Inorganic Parameters ..... 34
11.3.2 Data Evaluation ..... 36
11.4 Data Evaluation for Detection Monitoring Wells ..... 37
11.5 Action Requirements ..... 37
11.5.1 Verification Resampling ..... 37
11.5.2 Notification of Resampling Results ..... 38
11.5.3 Preliminary Assessment and Assessment Monitoring ..... 38
11.6 Leachate and Secondary Collection System Liquid Data Evaluation ..... 39

11.7 Evaluation of Landfill Gas Monitoring Data ..... 39
12.0 Reporting ..... 40
12.1 Introduction ..... 40
12.2 Annual Environmental Monitoring Report ..... 40
12.2.1 Contents ..... 40
12.2.2 Submittal Requirements ..... 41
12.3 Split-Sampling Information Submittal ..... 42
13.0 References ..... 43

## List of Tables

Table 3-1 Groundwater Monitoring Network Construction Information

Table 3-2 Statistical Summary for Parameters Collected from Leachate and Downgradient Groundwater from Silt-Clay (Shallow) Water-Bearing Zone

Table 3-3 Statistical Summary for Parameters Collected from Leachate and Downgradient Groundwater from Sand and Gravel (Deep) Water-Bearing Zone

Table 3-4 Groundwater Monitoring Schedule and Analytical Parameters

Table 4-1 Primary Leachate and Secondary Collection Systems Monitoring Schedule and Analytical Parameters

Table 5-1 Surface Water Monitoring Schedule and Analytical Parameters

Table 11-1 Statistical and Prescriptive Concentration Limits (PSCLs, ALs, and SSLs) for Compliance Monitoring Wellss

## List of Figures

Figure 1-1 Site Location Map

Figure 1-2 Site Plan and Monitoring Locations

## Appendices

Appendix A Groundwater Monitoring Wells and Piezometers: Exploratory Logs and Construction Details

Appendix B Landfill Gas Monitoring Plan

Appendix C Sampling and Analysis Plan

Appendix D TestAmerica Laboratories, Inc. Oregon Environmental Laboratory Accreditation and Quality Assurance Manual

Appendix E DUMPStat Statistical Analysis Results

**The compact disc (CD) attached to this report includes a complete electronic version (PDF) of this environmental monitoring plan.**

# ACRONYMS AND ABBREVIATIONS

| | |
|---|---|
| ACDP | Air Contaminant Discharge Permit |
| AEMR | annual environmental monitoring report |
| AMSL | above mean sea level |
| AL | action limits |
| As | arsenic |
| ASTM | American Society of Testing and Materials |
| °C | degrees Celsius |
| Ca | calcium |
| CD | compact disk |
| CFR | Code of Federal Regulations |
| Cl | chloride |
| cm/sec | centimeters per second |
| COC | chain of custody |
| COD | chemical oxygen demand |
| Cr | chromium |
| Cu | copper |
| DAF | dilution attenuation factor |
| DEQ | Oregon Department of Environmental Quality |
| DQR | data quality review |
| DUMPStat® | Downgradient Upgradient Monitoring Program Statistics |
| EMP | environmental monitoring plan |
| EPA | U.S. Environmental Protection Agency |
| Fe | iron |
| FSDS | field sampling data sheet |
| FID | flame ionization detector |
| ft/ft | feet per foot |
| ft/yr | feet per year |
| GCCS | gas collection and control system |
| GEM-2000 | CES LandTec® GEM-2000 Landfill Gas Monitor |
| HCl | hydrochloric acid |
| $HCO_3$ | bicarbonate alkalinity |
| HDPE | high-density polyethylene |
| $H_2SO_4$ | sulfuric acid |
| $HNO_3$ | nitric acid |
| IMD | internal management directive |
| IPA | informal preliminary assessment |
| K | potassium |
| LCRS | leachate collection and removal system |
| LEL | lower explosive limit |
| LFG | landfill gas |
| LFGMP | landfill gas monitoring plan |
| LFGTEF | landfill gas to energy facility |
| LGMS | landfill gas management system (database) |

# ACRONYMS AND ABBREVIATIONS (CONTINUED)

| | |
|---|---|
| LSCS | leachate secondary collection system |
| MCL | maximum contaminant level |
| MDL | method detection limit |
| Mg | magnesium |
| µg/L | micrograms per liter |
| µS/cm | microSiemens per centimeter |
| mg/L | milligrams per liter |
| mL/min | milliliter per minute |
| Mn | manganese |
| MS | matrix spike |
| MSE | mechanically stabilized earthen (berm) |
| MSW | municipal solid waste |
| mV | millivolts |
| Na | sodium |
| $Na_2S_2O_3$ | sodium thiosulfate |
| NGQGL | numerical groundwater quality guidance levels |
| NGQRL | numerical groundwater quality reference levels |
| Ni | nickel |
| NPDES | National Pollutant Discharge Elimination System |
| OAR | Oregon Administrative Rule |
| ORP | oxidation-reduction potential |
| ORS | Oregon Revised Statutes |
| OWRD | Oregon Water Resources Department |
| PA | preliminary assessment |
| PQL | practical quantitation limit |
| PSCL | permit-specific concentration limit |
| PVC | polyvinyl chloride |
| QA/QC | quality assurance/quality control |
| QAM | quality assurance manual |
| RI | remedial investigation |
| RL | Riverbend Landfill |
| RLC | Riverbend Landfill Company |
| RPD | relative percent difference |
| SAP | sampling and analysis plan |
| Sb | antimony |
| SCS | SCS Engineers |
| SMCL | secondary maximum contaminant level |
| SOP | standard operating procedures |
| SSL | site-specific concentration limit |
| S.U. | standard units |
| SWDP | solid waste disposal site permit |
| SWPCP | stormwater pollution control plan |
| TAL | TestAmerica Laboratories, Inc. |

## ACRONYMS AND ABBREVIATIONS (CONTINUED)

| | |
|---|---|
| TDS | total dissolved solids |
| TOC | total organic carbon |
| TSS | total suspended solids |
| VOC | volatile organic compound |
| WBZ | water-bearing zone |
| WM | Waste Management |
| Zn | zinc |

## UPDATE SYNOPSIS

This updated environmental monitoring plan (EMP) for the Riverbend Landfill (RL) was prepared by SCS Engineers (SCS) for the Riverbend Landfill Company (RLC) and supersedes the previous version dated December 2007 (Shaw, 2007). Updating the EMP was required by the Oregon Department of Environmental Quality (DEQ) as a condition of approval for constructing the mechanically-stabilized earthen (MSE) berm as noted in its letter dated May 30, 2013 (DEQ, 2013b).

This EMP addresses the following changes to RL's environmental monitoring programs:

- Modifications to the groundwater monitoring network including the following:
  - Installation of piezometers P-05A and P-06A in October 2005 to monitor groundwater quality in the north poplar tree farm irrigation area. A report documenting the drilling and installation activities of P-05A and P-06A was submitted to the DEQ (Shaw, 2005).
  - Decommissioning of detection monitoring well pair MW-7A/B in June 2009 to accommodate construction of landfill Module 8D. Wells MW-7A/B were originally installed as detection monitoring wells to assess groundwater quality downgradient of the former leachate irrigation area and these wells were not part of RL's compliance monitoring network. Consequently, replacement of these detection monitoring wells was not required, as approved by the DEQ. The DEQ approved the report documenting the decommissioning of well pair MW-7A/B in an email correspondence dated February 24, 2010 (DEQ, 2010).
  - Installation of five new monitoring wells (MW-22A, MW-22B, MW-23A, MW-23B, and MW-24A) in the shallow (upper) and deep (lower) water bearing zones (WBZs) and seven piezometers (GT10-1, GT10-11, GT10-12 SA-BH-1, SA-BH-3, SA-BH-5, and SA-BH-6) in the shallow WBZ. These wells were installed in 2010 as part of an additional hydrogeologic characterization of the site. A report documenting the drilling and installation of these wells was submitted to the DEQ in March 2011 (SCS, 2011).
  - Installation of piezometer P-07A in February 2012, in general accordance with a work plan submitted to the DEQ (SCS, 2012a), that was approved by the DEQ on February 2, 2012 (DEQ, 2012a). A report documenting the drilling activities and installation of P-07A was submitted to the DEQ (SCS, 2012b).
  - Decommissioning of piezometers P-04A and P-04B in June 2013 to accommodate construction of a MSE berm, consistent with the well decommissioning work plan submitted to and approved by the DEQ (SCS, 2013). A report documenting the well decommissioning activities was submitted to the DEQ (SCS, 2013c).
- Incorporation of monitoring well MW-22A and piezometers P-05A, P-06A, and P-07A into the detection monitoring program.

- Changes to RL's landfill gas monitoring plan, including modifications to the landfill gas (LFG) monitoring network. A separate LFG monitoring plan is included as an appendix in this EMP.

- Modifications to the monitoring program for RL's leachate management system.

- Updated statistically-derived concentration (prediction) limits using compliance monitoring well background water-quality data that was approved by the DEQ, and intra-well statistical methods consistent with the U.S. Environmental Protection Agency Guidance and DEQ-approved methods and guidance. The selected list of inorganic parameters and concentration limits presented in this EMP were reviewed by the DEQ prior to incorporating them into this EMP. Additionally, permit specific concentrations limits based on the prescriptive State of Oregon groundwater quality standard was established for vinyl chloride in conjunction with the DEQ.

- Modifications to the procedure for reviewing and evaluating analytical data for groundwater samples collected from site detection monitoring wells.

- Change in the submittal date of the annual environmental monitoring report from March 15 to April 30 of each year, consistent with DEQ's approval and addendum to RL's solid waste disposal site permit (DEQ, 2012b).

- Inclusion of the following information in the annual environmental reports: (1) table showing the quantities of liquid pumped from the secondary collection systems, (2) table showing groundwater elevations in paired wells and the vertical gradients at each well pair location, and (3) maintenance and inspection issues related to the MSE berm.

# 1.0 OVERVIEW

## 1.1 INTRODUCTION

Riverbend Landfill (RL) is owned and operated by Riverbend Landfill Company, Inc. (RLC), a wholly owned subsidiary of Waste Management (WM). It is located in Yamhill County, Oregon, at 13469 SW Highway 18, approximately three miles southwest of McMinnville, Oregon (Figure 1-1). Occupying approximately 85 acres, RL is bordered to the north, east, and west by agricultural land and buildings and to the south by the South Yamhill River. Figure 1-2 shows natural features, the landfill boundaries, landfill modules, and environmental monitoring locations (e.g., monitoring wells, piezometers, surface water, leachate, and landfill gas monitoring probes).

RL operates under Solid Waste Disposal Site Permit No. 345 (SWDP), issued by the Oregon Department of Environmental Quality (DEQ) on December 3, 1999, to accept municipal solid waste (MSW) and approved special waste. In accordance with Oregon Revised Statutes (ORS) 459.245(2), the SWDP is in effect until December 1, 2009. Although the SWDP has an expiration date of December 1, 2009, it has been administratively extended by the DEQ in compliance with Oregon Administrative Rule (OAR) 340-093-0070(6)(b)(C) (DEQ, 2012b).

Environmental monitoring is required by several permits. It is performed to evaluate the performance of engineered environmental control systems (e.g., liners, leachate and gas control systems) and to assess potential environmental impacts and public health and safety risks from any potential contaminant releases. The SWDP requires that RL maintain and periodically update the facility's environmental monitoring plan (EMP). This EMP has been updated pursuant to Section 13.0 of the SWDP, and as part of the DEQ's conditions of approval for the mechanically stabilized earthen (MSE) berm as noted in the its letter dated May 30, 2013 (DEQ, 2013b).

## 1.2 SUBTITLE D CONTEXT

The monitoring and reporting programs presented in this document are designed to comply with the Solid Waste Facility Criteria (and revisions) in 40 Code of Federal Regulations (CFR) 258 (Subtitle D), which was initially promulgated on October 9, 1991, and includes requirements for the location, design, and installation of monitoring systems and sampling and analysis standards.

## 1.3 STATE-SPECIFIC REGULATIONS, PERMITS, AND GUIDANCE DOCUMENTS, AND AGREEMENTS

Oregon, a U.S. Environmental Protection Agency (EPA)-approved state for administering environmental monitoring programs, has incorporated parts of 40 CFR 258 (Subtitle D) into its state regulations. This EMP also complies with the regulations, permits, and guidance documents described in the following sections.

### 1.3.1 State of Oregon Regulations and Guidance

- OAR 340-040 (Groundwater Quality Protection Rules).
- OAR 340-93-0130 (Site Characterization).
- OAR 340-94-0010 (Adoption of EPA's Subtitle D Rules).
- OAR 340-94-0040 (Operating Criteria).
- OAR 340-94-060 (Design Criteria).
- OAR 340-94-080 (Groundwater Monitoring and Corrective Action).
- OAR 690, Division 240 (Construction, Maintenance, and Decommissioning of Monitoring Wells, Geotechnical Holes, and Other Holes in Oregon) (OWRD, 1994).
- DEQ Internal Management Directive (IMD) for developing concentrations limits at permitted solid waste and water quality facilities, February 2011 (DEQ, 2011).

### 1.3.2 Permits

- The following relevant sections of the current (effective) SWDP:
  - Section 13.0, Environmental Monitoring Plan.
  - Section 14.0, Environmental Sampling Requirements.
  - Section 15.0, Establishing Permit-Specific Concentration Limits.
  - Section 16.0, Environmental Monitoring Standards.
  - Section 17.0, Record Keeping and Reporting Environmental Monitoring.
  - Section 18.0, Environmental Monitoring Network.
- National Pollutant Discharge Elimination System (NPDES) Stormwater Discharge Permit No. 1200-Z.
- Title V Permit No. 36-0011-TV-01, issued by DEQ on March 5, 2010 and effective through December 1, 2014.

## 1.4 REPORT ORGANIZATION

The remainder of the EMP is organized as follows:

- **Section 2** summarizes the regional and site geological and hydrogeologic settings.
- **Section 3** describes the groundwater monitoring network and historical and detection-monitoring programs, and presents the technical basis for selecting parameters for long-term compliance monitoring.
- **Section 4** describes the monitoring of the leachate in the collection pond and the primary leachate collection and removal systems (LCRSs) and liquid in the leachate secondary collection systems (LSCSs).
- **Section 5** describes the surface water monitoring network and program.
- **Section 6** provides reference to the NPDES stormwater monitoring program.
- **Section 7** provides reference to RL's landfill gas monitoring plan (LFGMP) included as an appendix in this EMP.
- **Section 8** provides reference to Title V permit and the associated air compliance monitoring program.
- **Section 9** describes facility observations for changes in the environment, such as distressed vegetation, that could indicate a potential release from the landfill and the monitoring device inspection program.
- **Section 10** provides a reference to the sampling and analysis plan (SAP) included as an appendix in this EMP.
- **Section 11** describes quality control/quality assurance (QA/QC) review procedures, data evaluation approach and procedures, (including the use of the computer program DUMPStat® to establishment of statistical concentration limits), verification sampling and response actions, and notification requirements.
- **Section 12** summarizes the reporting requirements, including an annual environmental monitoring report (AEMR) and split-sampling report.

Supporting documentation is attached in the following:

- Appendix A: Exploratory boring logs and construction details for monitoring wells and piezometers that comprise the current monitoring network.
- Appendix B: LFGMP.

- Appendix C: SAP that describes the sampling procedures, field and laboratory QA/QC procedures, analyte reporting limits, and analytical methods.

- Appendix D: Test America Laboratories, Inc. (TAL) Oregon Environmental Laboratory Accreditation and Quality Assurance Manual (QAM).

- Appendix E: Statistical analysis results of background groundwater quality data generated using the software program DUMPStat® to establishing prediction limits.

# 2.0 HYDROGEOLOGIC SETTING

## 2.1 INTRODUCTION

Numerous local and regional hydrogeological investigations have been performed in the vicinity of RL. In general, the investigations included topographic map interpretation, soil borings, installation of monitoring wells, geophysical testing (including surface and subsurface methods), collection and analysis of soil, groundwater, and leachate samples, and hydraulic parameter analyses. These studies provide the foundation for hydrogeologic interpretations and the technical basis for the environmental monitoring strategy presented in this EMP.

## 2.2 REGIONAL GEOLOGY

Four regional geologic units in the vicinity of RL are important from a hydrogeologic perspective. From oldest to youngest, they are as follows:

- Nestucca Formation (upper Eocene-age).
- Pliocene-age sands and gravels, which overlie the Nestucca Formation and underlie more recent alluvial sediments.
- Alluvial Willamette Silt (early to middle Quaternary-age) associated with the Willamette River and its tributaries. The Willamette Silt composes the upper and lower river terraces near RL.
- Late alluvium (Quaternary-age) associated with the recent floodplain of the South Yamhill River.

## 2.3 SITE GEOLOGY

Most of the site geologic interpretive information was obtained from previous RL studies, in particular the additional hydrogeologic investigation by EMCON (1994). Additional geologic information was collected during drilling of the boreholes for the site compliance well pairs in 1995 and 1996 (MW-12A/B, former monitoring well pair MW-13A/B, MW-14A/B, MW-15A/B, MW-16A/B) (EMCON, 1995; 1996) and six background and detection monitoring wells in 2000 (MW-17A, MW-18A, MW-18B, MW-19A, MW-20A, and MW-20B) used to monitor the new poplar tree management area in the southwest part of the site, and during drilling of soil borings SB-17B and SB-19B (CH2M Hill, 2000). Monitoring wells were not installed in the SB-17B and SB-19B boreholes because the target water-bearing zone (the lower sand-gravel water-bearing zone [WBZ]) was not encountered at these locations. Monitoring well locations are shown in Figure 1-2. Exploratory boring logs compiled during drilling of these wells are included in Appendix A.

### 2.3.1 Eocene-Age Deposits

The bedrock that underlies RL is composed predominantly of late Eocene-age Nestucca Formation basaltic lava flows and localized occurrences of marine siltstones and sandstones. Marine sedimentary

rocks were encountered in the monitoring well borings for MW-8B, MW-9B, and former monitoring well MW-11B, in the southeast and north-central parts of RL, and in soil borings SB-17B and SB-19B in the southwest part of RL. The depth to bedrock ranges from 34.6 feet bgs at MW-9B(R) to greater than 69.0 feet bgs at MW-10B, and generally decreases from west to east and from northwest to southeast across the site. Consistent with the variation in depth of the bedrock is a variation in the thickness of the overlying Pliocene-age sediments. Bedrock under the RL correlates well with basalts and sedimentary rocks that outcrop west of RL. The localized occurrences of marine sedimentary rocks produce geochemical variations in the groundwater, which are discussed further in Section 2.5.

### 2.3.2 Pliocene-Age Deposits

Overlying the Eocene bedrock deposits is a laterally continuous Pliocene-age unit consisting mostly of sandy gravels and gravelly sands, with localized interbeds of clayey and silty gravels and clay and silt lenses. The sand-and-gravel constituents are generally well-graded, angular to subrounded, and in places, cemented. The gravel consists primarily of fine-grained volcanic and marine sedimentary rocks. Silty and clayey sands and gravels of variable thickness occur near or at the top of the unit.

The elevation of the top of the sand-gravel unit is relatively uniform across RL, ranging from 90 to 112 feet above mean sea level (AMSL). The overall thickness of the unit, however, varies in relation to variations in the elevation of the underlying bedrock surface. The thickest deposits occur in the northwest part of RL, near MW-10B, where the estimated thickness is 43.5 feet. The unit thins in the southeast part of RL, to approximately 7 feet at MW-5B, 11.5 feet at MW-6B, and 15.5 feet at the former MW-8B location, and in the southwest part of RL at SB-19B, where only 2 feet of the sand-and-gravel interval was encountered (CH2M Hill, 2000). In the extreme southwest part of the site at SB-17B, the sand-gravel unit was not encountered (CH2M Hill, 2000).

### 2.3.3 Quaternary-Age Deposits

Two quaternary-age alluvial units are present at RL: Early to middle Quaternary-age Willamette Silt and Late Quaternary-age silt-clay. The materials in both units are similar and consist of bedded silts, clays, clayey silts, and silty clays. The deposits range in thickness from 17 feet near MW-21A, at the lower terrace south of RL, to 63 feet near SB-17B, in the extreme southwest part of the site (CH2M Hill, 2000).

## 2.4 SITE HYDROGEOLOGY

Near RL, groundwater flows from higher elevations, in the foothills west and northwest of RL, to lower elevations, near the South Yamhill River Valley. At RL, groundwater occurs in two target WBZs:

- Upper silt-clay alluvial deposits (both the Willamette Silt and the late-quaternary alluvium).
- Lower sand-gravel Pliocene deposits.

Groundwater elevations measured in on-site groundwater monitoring wells and piezometers since January 1993 have been used to evaluate the hydraulic parameters and flow characteristics of both WBZs, as further discussed below.

### 2.4.1 Upper Silt-Clay Water-Bearing Zone

Across most of RL, the groundwater flow direction and gradient in the upper silt-clay WBZ show minor seasonal and spatial variability, typically in response to variations in precipitation. The direction of groundwater flow in the upper silt-clay WBZ is generally south-southeast, toward the South Yamhill River. In the extreme southwest part of the site, groundwater flow is predominantly toward the east. The historical seasonal range of groundwater gradients is 0.005 to 0.01 foot per foot (ft/ft).

Average groundwater flow velocities in the upper silt-clay WBZ were calculated to range from 0.1 to 24.2 feet per year (ft/yr), using an average seasonal gradient of 0.0075 ft/ft, hydraulic conductivity values ranging from 2.08 x 10-7 to 4.68 x 10-4 centimeters per second (cm/sec) as determined from slug tests performed as part of the additional hydrogeologic investigation (EMCON, 1994), and an effective porosity of 15 percent.

Slug testing of wells installed in October 2000 to monitor the new poplar tree management area in the southwest corner of the site indicate that higher hydraulic conductivities (mean value of 6.8 x 10-3 cm/sec) occur in this area. Seams of coarser-grained sediments (i.e., silty sand, fine sand) were encountered at various depth intervals in the upper silt-clay WBZ, which probably accounts for the elevated hydraulic conductivity values in the area.

Historical groundwater-level data for monitoring wells MW-5A and MW-12A, screened in the upper silt-clay WBZ near the South Yamhill River, indicate that minor temporal fluctuations likely occur in response to seasonal changes in river stage. In general, groundwater elevations measured in these wells are higher than the river elevation, indicating that the groundwater in the upper silt-clay WBZ discharges to the river. The relationship between the South Yamhill River and groundwater indicates that the South Yamhill River acts as a hydraulic boundary to groundwater flow in the upper silt-clay WBZ.

### 2.4.2 Lower Sand-Gravel Water-Bearing Zone

The groundwater flow direction and gradient in the lower sand-gravel WBZ does not vary significantly as a result of seasonal changes in precipitation. In most areas of RL, groundwater flows toward the southeast in the direction of the South Yamhill River and shifts southward as it approaches the river. The historical seasonal range of groundwater gradients is 0.0088 to 0.012 ft/ft.

Average groundwater flow velocities in the lower sand-gravel WBZ were calculated to be 124 ft/yr using an average seasonal gradient of 0.01 ft/ft, a hydraulic conductivity value of 3.6 x 10-3 cm/sec, as determined from a variable discharge pumping test performed as part of the additional hydrogeologic investigation (EMCON, 1994), and an effective porosity of 30 percent.

Interpretation of RL stratigraphic information indicates that recharge to the lower sand-gravel WBZ is limited in the vicinity of RL due to the presence of the overlying silt-clay WBZ, which has a relatively

low hydraulic conductivity. Furthermore, as the lower sand-gravel stratigraphic unit partially transects the river, the river likely represents a hydraulic barrier for groundwater in the lower sand-gravel zone. Historically, groundwater elevations measured in wells screened in the lower sand-gravel WBZ near the South Yamhill River (at wells MW-5B and MW-12B) were consistently higher than the river elevation. These differences in elevation suggest that groundwater in the lower sand-gravel WBZ was discharging to the river during those months.

RL has a production well (PW-1), located near the facility entrance. The well is completed in and pumps water from the lower sand-gravel WBZ. There are also two production wells (MB-1 and MB-2) on the former Bernards' property on the east side of the RL entrance. MB-1 is active, but MB-2 has been disconnected. During the dry season when PW-1 and MB-1 are used most frequently.

### 2.4.3 Vertical Hydraulic Gradients

Trends in water-level elevations between the upper and lower WBZs, exhibited by adjacent piezometers and monitoring well pairs designated A and B (see Section 3.2 for a description of the monitoring network), are generally similar, with periods of high and low elevations occurring at the same time of the year. The highest water levels in the upper silt-clay and lower sand-gravel WBZs generally occur in the spring, while the lowest elevations occur in the fall. Although seasonal trends are similar in the two WBZs, the magnitude of the water-level fluctuations varies significantly between the zones. Water levels in wells screened in the shallow WBZ exhibit the largest fluctuations in water levels directly in response to precipitation. Consequently, vertical groundwater gradients typically change from upward to downward during the course of a year. That variability indicates a low degree of hydraulic connection between the upper and lower WBZs.

## 2.5 GROUNDWATER CHEMISTRY

### 2.5.1 Upper Silt-Clay Water-Bearing Zone

Groundwater chemistry in the upper silt-clay WBZ is characterized by the predominance of calcium (Ca), magnesium (Mg), and bicarbonate alkalinity ions ($HCO_3$), and a pH generally less than 8.0. Sulfate shows little variability, suggesting that it does not contribute significantly to changes in the chemical composition of groundwater. Groundwater in the upper silt-clay WBZ is generally classified as moderately hard to hard.

Manganese (Mn) is routinely detected above the secondary regulatory standard (0.05 milligrams per liter [mg/L]) in groundwater collected from most upgradient and downgradient monitoring wells screened in the silt-clay WBZ. Iron (Fe) is commonly detected in groundwater samples collected from the upper WBZ. Fe is found at concentrations above the secondary standard detected (0.3 mg/L) in samples collected from a few upgradient and downgradient wells.

While the relative concentrations of inorganic parameters in groundwater samples collected from the silt-clay WBZ are generally consistent between wells, some parameter concentrations vary spatially, with higher concentrations detected in both upgradient and downgradient wells (e.g., Fe). The variability can be attributed to the lithologic heterogeneity of the upper silt-clay WBZ. The spatial

variability also reflects potential variations in hydraulic conductivity, which may serve to increase groundwater residence time in localized zones across RL.

The most common metals detected in groundwater samples from the silt-clay WBZ are arsenic (As), barium (Ba), chromium (Cr), copper (Cu), and zinc (Zn), each of which occurs naturally in soil (EMCON, 1994). The metals are widely distributed and have been detected in samples collected from both upgradient and downgradient wells. The general distribution of total metals and high levels of total suspended solids (TSS) indicates that the detected metals represent naturally occurring elements in the fine-grained soils. Higher concentrations are most likely related to high concentrations of particulates in unfiltered samples.

### 2.5.2 Lower Sand-Gravel Water-Bearing Zone

Groundwater chemistry in the sand-gravel WBZ is characterized by the predominance of Ca, Mg, and $HCO_3$ ions. Groundwater in the lower sand-gravel WBZ is generally harder than in the upper silt-clay WBZ, and is classified as hard to very hard (EMCON, 1994).

Groundwater samples collected from all upgradient and downgradient monitoring wells screened in the lower sand-gravel WBZ contain Mn at concentration above the secondary standard. Fe is commonly detected in groundwater samples collected from the lower WBZ. Fe is detected at concentrations above the secondary standard in a few upgradient and downgradient wells. In addition, chloride (Cl) and total dissolved solids (TDS) were detected above their secondary drinking water standards (250 and 500 mg/L, respectively) in groundwater collected from former upgradient well MW-8B and compliance well MW-12B. RL performed additional investigations (as discussed in Section 2.5.3) that showed the higher concentrations of inorganic constituents in groundwater samples collected from compliance well MW-12B were representative of natural groundwater conditions influenced by the vertical flow from the underlying bedrock (marine sedimentary rocks).

Eleven metals have previously been detected at low-to-trace concentrations in groundwater samples collected at RL from the sand-gravel WBZ. The most commonly detected metals are Ba, cobalt, Cu, nickel, vanadium, and Zn. The presence of these metals in unfiltered samples from upgradient wells demonstrates that they occur naturally in this WBZ.

### 2.5.3 Preliminary Assessment Findings

Evaluations conducted subsequent to the additional hydrogeologic investigation (EMCON, 1994) further support the occurrence of spatial and temporal variability in groundwater chemistry, and provide a rationale for the testing of trace metals at the site. Most notable were preliminary assessments (PAs) performed to address water-quality issues in selected downgradient compliance monitoring wells.

In 1997, a PA was performed to address water-quality conditions in several compliance monitoring wells screened in both the silt-clay and sand-gravel WBZs (USAW, 1997). The PA results indicate that elevated concentrations of inorganic parameters at the site (TDS and pH) occur naturally in the sand-gravel WBZ and relate, in part, to the influence of groundwater from the marine sedimentary bedrock aquifers that underlie the site. The DEQ concurred with this position (DEQ, 1998). The 1997

PA also indicated that the detections of low concentrations of certain trace metals (in the silt-clay WBZ) appear to be associated with laboratory false-positive detections and were not associated with landfill operations.

From January through April 2001, an informal preliminary assessment (IPA) was performed to address detections of Fe, Mn, and TDS above secondary water-quality standards in groundwater samples collected from MW-12B in May 2000 (HWA, 2001). The results of the IPA showed that elevated concentrations of Fe, Mn, and TDS detected in MW-12B groundwater are naturally occurring and are likely the result of mineralized (or connate) groundwater derived from the underlying marine sediments of the Nestucca Formation mixing with groundwater in the sand-gravel WBZ. The IPA results indicated that the elevated concentrations are not the result of landfill activities, but are rather representative of naturally occurring background conditions. The IPA results also indicated that the degree of spatial and temporal variation of groundwater chemistry in the sand-gravel WBZ beneath the site is significant.

# 3.0 GROUNDWATER MONITORING

## 3.1 INTRODUCTION

Groundwater monitoring is performed to identify a potential release from the landfill. This section describes the groundwater monitoring network and the historical (background) and detection-monitoring programs, including the sampling schedules and monitoring parameters.

This section also provides an evaluation of the historical groundwater and leachate analytical data to establish background water-quality, assess variability of the groundwater geochemistry at the site and determine site-specific leachate chemistry. The purpose is to establish a reliable list of long-term, site-specific compliance-monitoring parameters that is technically justified and that will effectively identify a potential release from the facility, while minimizing the false-positive and false-negative error rate.

## 3.2 MONITORING NETWORK

The groundwater monitoring network, illustrated in Figure 1-2, consists of the following (based on terminology in Solid Waste Guidance, Municipal Solid Waste Landfills; DEQ, 1996):

- Compliance wells
- Detection wells.
- Groundwater elevation monitoring locations (wells and piezometers).

The wells and piezometers designated with an "A" are screened in the upper silt-clay unit (Quaternary-age) and those designated with a "B" are screened in the lower sand-gravel unit (Pliocene-age), except for MW-1A and MW-1B, which are reversed. Monitoring wells and piezometers with no designation (e.g., MW-2, P-01) are all screened in the upper silt-clay unit.

Construction details and survey data for the active groundwater monitoring wells (and piezometers) are listed in Table 3-1. Exploratory boring logs and well construction details are found in Appendix A.

To eliminate the potential for cross-contamination during sampling, each compliance and detection-monitoring well is equipped with a dedicated QED® bladder pump. The pump intakes are located approximately in the middle of the well screens.

### 3.2.1 Compliance Wells

Groundwater compliance wells are located downgradient of existing landfill modules and the leachate pond to provide early detection of a potential release. The point-of-compliance monitoring network consists of compliance well pairs MW-12A/B, MW-14A/B, MW-15A/B, MW-16A/B, and MW-21A/B (see Figure 1-2). Former compliance monitoring well pair MW-13A/B was decommissioned in May 2001 to accommodate construction of the leachate pond, as approved by the

DEQ (DEQ, 2001). A new compliance monitoring well pair MW-21A/B was installed in October 2000 to replace MW-13A/B.

The groundwater compliance monitoring network was designed to obtain representative samples and data for intrawell statistical analysis (discussed in detail in Section 11.3.1). By using an intrawell statistical approach for evaluating data, upgradient monitoring wells are not required to develop statistical limits for individual monitoring locations.

### 3.2.2 Detection Wells

Nine detection wells (MW-5A, MW-5B, MW-19A, MW-20A, MW-20B, MW-22A, P-05A, P-06A, and P-07A; see Figure 1-2) will be monitored for the following purposes:

- MW-5A is used to monitor for volatile organic compounds (VOCs) in groundwater because of its association with past landfill gas effects in the vicinity of this well.
- MW-5B is used to monitor VOCs in groundwater within the lower (sand-gravel) WBZ beneath MW-5A.
- MW-19A, MW-20A, MW-20B, P-05A, P-06A, and P-07A are monitored to assess changes in groundwater quality related to leachate irrigation activities in the 43.6-acre poplar tree management area.
- MW-22A is used to monitor groundwater in the shallow WBZ south of the leachate pond.

Former wells MW-7A and MW-7B were used to monitor groundwater quality downgradient of the former 13.2-acre poplar tree (leachate) management area. However, RLC suspended water-quality monitoring of these wells beginning in 2004 in response to terminating spray irrigation activities in the former poplar tree area in September 2002. DEQ approved this change to the monitoring program in letter dated December 1, 2004 (DEQ, 2004). Wells MW-7A/B were decommissioned in June 2009 to accommodate construction of landfill Module 8D in the former leachate irrigation area of RL.

### 3.2.3 Groundwater Elevation Monitoring Locations

In addition to data collected from the site compliance and detection-monitoring wells, groundwater elevation data will be collected during each sampling event from the following monitoring wells and piezometers: MW-1A/B, MW-2, MW-3A/B, MW-4A/B, MW-6A/B, MW-9A/B(R), MW-10A/B, MW-17A, MW-18A/B, MW-22B, MW-23A/B, MW-24, P-01, P-02, P-03, SA-BH-1, SA-BH-3, SA-BH-5, SA-BH-6, GT10-1, GT10-11, and GT-10-12. Groundwater elevations are also measured in the RL production well PW-1 and inactive production well MB-2.

### 3.2.4 Future Modifications to Groundwater Monitoring Network

Future modifications to the groundwater monitoring network will be made in accordance with OAR 690, Division 240, and the DEQ's Groundwater Monitoring Well Drilling, Construction, and Decommissioning Guidance (DEQ, 1992) and will be consistent with the SWDP. DEQ must approve any modification to the monitoring network before it is implemented.

## 3.3 HISTORICAL (BACKGROUND) MONITORING

The purpose of historical (background) groundwater monitoring is to determine representative parameter concentrations for unimpacted groundwater at each new monitoring location. Unimpacted historical data are intended to account for changes in groundwater chemistry (e.g., seasonal variability) that are not attributable to the monitored facility.

After sufficient samples have been collected from an individual well to determine the unimpacted historical (background) concentration ranges (see requirement in Section 15.2 of the SWDP), the data will be evaluated in conjunction with leachate data to select parameters for long-term detection monitoring (as discussed in this section) and to establish statistically derived concentration limits.

Two conditions were considered in establishing the historical (background) database:

- A sufficient number of samples were collected from each monitoring well to provide a basis for statistical analysis. DEQ typically requires at least nine samples, which is generally consistent with the statistical method used by WM (DUMPStat®), which requires a minimum of eight samples (but as many as 13 samples may be required if the detection frequency of a specific inorganic parameter is less than 25 percent).

- Seasonal (temporal) variability must be incorporated. Quarterly sampling incorporates the statistical effects of seasonality on water chemistry.

## 3.4 SELECTION OF PARAMETERS FOR LONG-TERM COMPLIANCE MONITORING

After a sufficient number of acceptable historical analytical results have been obtained from a monitoring well (typically 9 to 13 samples, depending on the detection frequency and statistical method used to analyze the data), compliance well groundwater quality monitoring can transition from historical (background) to long-term compliance monitoring.

A critical component in this transition is to select appropriate site-specific compliance monitoring indicator parameters from the list of parameters analyzed during historical monitoring. This section presents the criteria used for selecting the site-specific indicator parameters to be used for long-term compliance monitoring. The parameter selection procedure described in this section was originally presented in the 2007 EMP (Shaw, 2007) and approved by the DEQ. Additional modifications were discussed with and reviewed by the DEQ during preparation of this updated EMP, as discussed in Section 3.4.7.

### 3.4.1 Approach and Objectives

Using large, generic lists of constituents, such as those analyzed during historical (background) monitoring, is ineffective for long-term compliance monitoring because many of the constituents:

- Typically are not present in the source materials;
- Are not mobile;
- Attenuate through chemical or physical processes; or
- Are not easily detected at concentrations that contrast significantly with background groundwater chemistry.

For example, trace metals, which historically had been used in many groundwater monitoring programs at solid waste facilities, generally do not provide the earliest indication of a release to groundwater. This is because trace metal concentrations in landfill leachate often are low. In addition, metals tend to be strongly attenuated by sorption and precipitation.

The number of monitoring constituents has a profound effect on the statistical power (i.e., the ability to detect real contamination) of the groundwater monitoring program. The larger the number of analyzed parameters, the greater the statistical limit must be to avoid excessive false-positive statistical decisions based on the built-in error rate (e.g., 0.05 [5 percent], or 0.01 [1 percent]). For example, if a detection-monitoring program consists of five monitoring wells and 20 monitoring parameters (i.e., 100 statistical decisions per sample event), even a very low analytical error rate (e.g., 0.01 or 1.0 percent) would yield one false-positive result for every sampling event.

As the number of constituents decreases, so does the size of the prediction limit or control chart limit necessary to meet the required site-wide false-positive rate. Hence, a reduction of parameters will directly decrease the false-negative error rate. The smallest number of detection-monitoring constituents that provide a clear signal of a potential release should be the only constituents routinely evaluated statistically.

This monitoring approach is consistent with the guidelines established under 40 CFR 258.54(a)(1) and the DEQ's February 2011 IMD (DEQ, 2011). In determining the alternate constituent list at solid waste facilities, 40 CFR 258.54(a)(1) allows 40 CFR 258 Appendix I constituents to be deleted if it can be shown that the removed constituents are not reasonably expected to be in or derived from the waste contained in the unit. Title 40 CFR 258(a)(2) allows approved states, such as Oregon, to establish an alternate list of inorganic parameters in lieu of all or some of the heavy metals (constituents 1-14 in Appendix I to Part 258), if the alternative constituents will provide a reliable indication of inorganic releases from the waste unit to groundwater.

Therefore, based on the above considerations, the selection of effective compliance monitoring parameters for RL considers the physical and chemical characteristics of the source material, the surrounding hydrogeologic regime, and site-specific geochemistry. The overall objectives of the selection process are to:

- Reduce the number of monitoring constituents to only those found or expected to be found or derived from site-specific source materials. This will reduce the number of false-positive results.

- Monitor constituents that contrast significantly with groundwater. This will eliminate those constituents that could lead to false-positive results due merely to temporal or spatial variability in the natural groundwater chemistry.

- Enhance the statistical power (or effectiveness) of the monitoring program (Gibbons, 1994; EPA, 2009) to reduce the false-positive and false-negative rates by making fewer statistical comparisons.

### 3.4.2 Volatile Organic Compounds

VOCs are excellent parameters for providing an early indication of a potential release from a landfill because they are (1) rarely detected in background groundwater samples, (2) detected more frequently than any other class of organic compounds in solid waste landfill leachate (Cravy et al., 1990; Plumb, 1991), and (3) easy to detect and relatively mobile in groundwater. As a result, analysis of VOCs will remain an integral part of future monitoring at RL.

Because VOCs are rarely detected in background groundwater samples, establishing monitoring well-specific limits for VOCs is generally not an option. Therefore, detection decision rules based on laboratory-specific practical quantitation limits (PQLs) are used. The PQL is the lowest level that can be reliably achieved within specified limits of precision and accuracy during routine laboratory conditions. They are used to establish reporting limits of applicable low-detection analytes, especially VOCs. The EPA developed the PQL concept to address the issue of analytical variability for compliance with the Safe Drinking Water Act.

As discussed in the QAM (Appendix D), TAL has established PQLs for each analytical parameter. The PQLs are based on initially establishing laboratory-specific method detection limits (MDLs), which are generally three to five times lower than the corresponding PQLs. Matrix interference might prevent the PQLs from being met. These situations are resolved on a case by case basis.

### 3.4.3 Site-Specific Leachate Inorganic Parameters

Site-specific inorganic parameters for statistical analysis of compliance well groundwater-quality data have been developed using the performance-based approach described below. The assessment included a thorough characterization of leachate quality, and the establishment of background groundwater quality at the site using historic water-quality data for samples collected from the site compliance wells. The DEQ concurred that downgradient monitoring well analytical data are representative of "background" conditions because the data do not indicate leachate has impacted site groundwater (DEQ, 2006b). A significant amount of leachate and background (downgradient) groundwater quality data has been collected at RL. Therefore, the use of a site-specific detection-monitoring parameter list (for use in statistics) is technically justified.

In accordance with 40 CFR 258.54(a)(2) and consistent with DEQ guidance (DEQ, 2011), the selection of inorganic parameters for long-term compliance monitoring at RL was based on the following three performance criteria:

- Elimination of analytical redundancies.
- The types and concentrations of constituents in the site-specific source material (leachate), and the contrast between these constituents and background (downgradient) groundwater quality.
- The mobility and persistence of the parameters through porous media.

A discussion of each criterion in this parameter optimization approach is presented below.

### 3.4.4 Parameter Redundancy

The first step in developing a set of effective indicator parameters involved eliminating analytical redundancies resulting from discrete ions inherent in a parameter's chemical makeup. Inorganic parameters historically monitored in groundwater samples collected from RL monitoring wells that exhibit water-quality characteristic redundancies include TDS, specific conductance, $HCO_3$, total alkalinity, and total hardness, as described below:

- TDS and specific conductance both provide a quantitative measurement of the dissolved mineral content of a water sample. To minimize redundancies in the monitoring program, TDS analysis was retained, and specific conductance analysis was eliminated from the routine long-term monitoring program. It is important to note that specific conductance is measured in the field during purging before groundwater samples are collected from the wells.
- A similar relationship also exists for $HCO_3$ and total alkalinity. The bicarbonate ion represents the predominant form of alkalinity in groundwater at the site. Prediction limits (mean concentrations and standard deviations) calculated using the computer program DUMPStat®, which were presented in the 2007 EMP (Shaw, 2007), were identical or nearly identical for $HCO_3$ and total alkalinity. Consequently, monitoring for total alkalinity was redundant. Therefore, $HCO_3$ was included in the routine long-term monitoring program and total alkalinity was eliminated.
- Total hardness is not an empirical measure of any single constituent. Ca and Mg cations (complexed with carbonate or $HCO_3$ anions) are the major contributors to total hardness in natural waters. Since the concentrations of Ca, Mg, and $HCO_3$ ions are routinely analyzed, total hardness was considered redundant. Therefore, total hardness was eliminated from the routine long-term monitoring program.

### 3.4.5 Concentration Contrast Between Water Quality (Background) and Leachate

The next step in the parameter selection process involved comparing the concentrations of the parameters in leachate (which have the potential to impact groundwater) to those detected in background groundwater samples. This approach significantly improved the effectiveness of the compliance monitoring program since only those parameters that have high enough concentrations in leachate are evaluated. This step identified the primary constituents of landfill leachate which have the potential to impact groundwater and compares them with those detected in background groundwater samples. For this evaluation, downgradient monitoring well analytical data were considered to be representative of "background" conditions because the data do not indicate leachate has impacted site groundwater, as approved by the DEQ (DEQ, 2006b). This conclusion is supported by an evaluation of historic groundwater analytical data for groundwater samples collected from monitoring well pairs MW-12A/B, MW-14A/B, and MW-21A/B, as provided in the 2007 EMP (Shaw, 2007, Appendix H).

Background (downgradient) parameter concentrations were analyzed statistically (using DUMPStat) to develop statistical prediction limits for each constituent. Results of this statistical analysis were provided in the 2007 EMP (Shaw, 2007). These values were then contrasted to the historical (maximum) leachate concentrations. The concentration of a specific parameter in the site leachate must be sufficiently high to produce a clear contrast with background concentrations in order to identify a potential release. Sufficient contrast is assumed when the maximum leachate concentration is sufficiently higher than the upgradient prediction limit (assumed to be a minimum of ten times higher), to account for the effects of dilution and attenuation. Use of a dilution attenuation factor (DAF) of 10 is considered conservative based on EPA guidance, which identifies typical DAFs of between 10 and 20 (EPA, 1996), and American Society of Testing and Materials (ASTM) guidelines (ASTM, 2004). Therefore, use of the maximum leachate concentration in this evaluation was considered conservative. If insufficient contrast exists for a specific analyte (e.g., leachate concentration is consistently at or below the background groundwater prediction limit), then that parameter is eliminated from further consideration for detection monitoring.

To obtain the most effective site-specific monitoring parameters, statistical (prediction) limits were calculated for selected Group 1b, 2a, and 2b inorganic constituents in groundwater collected from downgradient monitoring wells screened in the upper silt-clay WBZ (wells MW-12A, MW-14A, MW-15A, MW-16A, and MW-21A) and lower sand-gravel WBZ (wells MW-12B, MW-14B, MW-15B, MW-16B, and MW-21B). The following inorganic parameters were not included in the evaluation:

- Parameters which exhibit analytical redundancies (specific conductivity, total alkalinity, and hardness).

- Carbonate, chemical oxygen demand (COD), and TSS because the DEQ previously approved eliminating those parameters from the statistical evaluation program (DEQ, 2000).

- The following constituents with detection frequencies less than 50 percent in site leachate samples since they are not consistently detected at or above their method reporting limits: nitrate (as nitrogen), beryllium, cadmium, selenium, silver, and thallium). Parameter detection frequencies in leachate are provided in Tables 3-2 and 3-3.

The calculated prediction limits of inorganic parameters in background (downgradient) groundwater are presented in 2007 EMP (Shaw, 2007, Appendix C) and summarized in Tables 3-2 and 3-3. These were contrasted with the maximum concentration of each inorganic constituent detected in leachate samples collected from the LCRS since 1996 (see Tables 3-2 and 3-3). Results of the comparison indicated that the following inorganic constituents exhibited sufficient contrast between leachate concentrations and upgradient groundwater prediction limits (see attached Tables 3-2 and 3-3):

- **Shallow (silt-clay) compliance wells:** total organic carbon (TOC), TDS, ammonia, $HCO_3$, Cl, Fe, Mg, potassium (K), sodium (Na), and Zn.

- **Deep (sand-gravel) compliance wells:** TOC, TDS, ammonia, $HCO_3$, sulfate, Mg, K, Na, antimony (Sb), arsenic (As), nickel (Ni), and Zn.

### 3.4.6 Parameter Mobility

The parameter selection process also considered parameter (chemical) mobility. Parameter mobility describes the ease with which a given constituent can migrate through the hydrogeologic regime. Generally, the parameters selected in the first two steps are all fairly mobile in the subsurface environment, with the exception of the trace metals (Sb, As, Ni, and Zn).

Several processes interact to influence the transport of metals through porous media, including complexation reactions, oxidation/reduction processes, and reactions that result in the removal of metal ions from liquid, such as adsorption and mineral precipitation. It is widely recognized that, due to the positive charge of metal ion species, adsorption of metals onto negatively charges clay minerals or organic matter is an important limiting process with respect to metals mobility in groundwater. A cation with a greater valence state is adsorbed more strongly than a cation with a lower valence state (e.g. $Cr_3$+ versus $Cr_2$+), and for a given valence state, a cation with a smaller radius is adsorbed more strongly than a cation with a larger radius (e.g. $Cr_3$+ versus $Fe_3$+). Trace metals, therefore, can be expected to be adsorbed more strongly than the major metals, such as sodium, potassium, calcium, and magnesium, all of which possess relatively large atomic radii and relatively low valence states.

The stratigraphic sequence of geologic material that comprise the shallow and deep WBZs beneath the RL include lithologies with abundant fine-grained sediments that would be effective at retarding the transport of trace metals. These include the predominant silt/clay-bearing shallow WBZ and the deep sand-gravel WBZ that contains fine-grained matrix material and silt-clay interbeds.

Based on the above considerations, trace metals are unlikely to provide an effective or early indication of a potential release from the waste management units at the facility. As determined by contrasting leachate chemistry with background groundwater prediction limits, there are several primary indicator parameters (along with VOCs) that should provide a much higher probability of early detection of a potential release. Hence, Sb, Ba, As, Ni, and Zn were removed from the list of routine detection

monitoring parameters. The full suite of trace metals will be tested for every five years (as part of the five year comprehensive monitoring event described in Section 3.4.10), or if an identified change in water quality warrants trace metal testing. The DEQ approved reducing the monitoring frequency for trace metals to one event every five years in its December 1, 2004 letter (DEQ, 2004).

### 3.4.7 Parameter Persistence

During the process of updating this EMP, time-concentrations diagrams were reviewed for the long-term monitoring parameters in conjunction with the DEQ. Through this process, it was determined that parameter persistence should be considered as a criterion to further eliminate two additional parameters (Fe and ammonia), which were retained as part of the previous parameter optimization documented in the 2007 EMP (Shaw, 2007). Persistence is defined as the ability of a given parameter to migrate through the subsurface without degrading to non-detectable concentrations or to other by-products. A parameter's persistence can be further defined by its ability to remain nearly constant (under natural conditions) through time demonstrating a lack of significant temporal variability.

Review of time-concentration diagrams for Fe and ammonia in compliance well groundwater collected since 2007 showed that these parameters exhibit a significant degree of temporal variability, likely in response to geochemical processes, including complexation reactions and oxidation/reduction processes (see time-concentration diagrams provided in Appendix E). Consequently, prior to submittal of this EMP, it was determined appropriate to exclude Fe and ammonia from the list of long-term monitoring parameters for which statistically derived concentration limits will be established. Fe and ammonia will be tested for every five years (as part of the five year comprehensive monitoring event described in Section 3.4.10), or if an identified change in water quality warrants testing of these parameters.

### 3.4.8 Summary of Site-Specific Inorganic Parameters Selected for Long-Term Monitoring

The long-term monitoring parameters developed for RL, using the parameter optimization approach described in the previous sections, are summarized in Table 3-4. Statistically-derived concentration limits were established for these site-specific inorganic parameters (as described in Section 11.3.1). As additional groundwater and leachate data are generated throughout the course of landfill operations, the long-term monitoring parameter list will be reevaluated periodically and updated, if appropriate and necessary. If parameters are added to the routine detection-monitoring list, background concentrations will be determined using appropriate statistical methods, and added to the long-term monitoring program after the changes are approved by the DEQ.

### 3.4.9 Supplemental Geochemical Parameters

In addition to VOCs and the proposed site-specific leachate indicator parameters, RL also proposes to incorporate analysis of supplemental geochemical parameters (cations, anions, and nitrate) into the routine (semiannual and annual) monitoring program. The additional geochemical parameters are proposed to augment the site-specific detection monitoring parameters, such that the general chemical nature of groundwater can be further characterized and potential mechanisms affecting water quality (both natural and man-made) can be better understood and evaluated. The supplemental parameters

will not be evaluated statistically. However, they can provide critical information for evaluating data reliability and potential changes in groundwater quality without affecting the site-wide false-positive or false-negative error rate.

Routine analysis of dissolved cations and anions in groundwater samples collected from the site compliance and detection monitoring wells will be used for: (1) calculating cation-anion balances, (2) geochemical analysis using Piper (trilinear) diagrams and Stiff plots, and (3) general groundwater quality trend analysis. Methods for evaluating supplemental geochemical parameter data are discussed in Section 11.3.

### 3.4.10 Five –Year Comprehensive Monitoring Event

RL also proposes performing a comprehensive (site-wide) monitoring event to verify that water-quality conditions monitored in both background (upgradient) and compliance monitoring have not significantly changed. The comprehensive (site-wide) monitoring event will be performed every five years (previously conducted as part of the second quarter [Spring] 2013 monitoring event) and will include the following components (see Table 3-4):

- Analysis of groundwater samples collected from the site compliance monitoring wells for those parameters not monitored on a routine basis. These include the complete list of parameters specified in Table 3-4, including leachate indicator parameters and trace metals.

- Analysis of groundwater samples collected from detection monitoring wells MW-19A, MW-20A, and MW-20B for those parameters not monitored on a routine basis. These include the complete list of parameters specified in Table 3-4, including VOCs and trace metals.

- Collection and analysis of groundwater samples from the following site upgradient (background) wells for the complete list of parameters specified in Table 3-4: MW-1B, MW-2, MW-10A, MW-17A, and MW-18A screened in the upper silt-clay WBZ and MW-1A, MW-10B and MW-18B screened in the lower sand-gravel WBZ).

Methods for evaluating supplemental groundwater quality data are discussed in Section 11.3.

## 3.5 MONITORING SCHEDULE

Table 3-4 summarizes the groundwater monitoring schedule and the parameters for the site compliance and detection monitoring wells. Routine (semiannual) compliance monitoring events will be performed in the second quarter (spring) between April 1 and May 31 and in the fourth quarter (fall) between October 1 and November 30. Annual monitoring events are performed in the second quarter (spring) between April 1 and May 31.

Routine monitoring of detection monitoring wells installed within and downgradient of the poplar tree management area will be performed semiannually in upper WBZ wells MW-19A and MW-20A, and annually in shallow WBZ piezometers P-05A, P-06A, and P-07A, as well as MW-20B screened in the

lower WBZ adjacent to MW-20A (according to the semiannual and annual scheduled described in the previous paragraph and summarized in Table 3-4). Monitoring of shallow detection monitoring well MW-22A installed south of the leachate pond will be performed annually, as summarized in Table 3-4.

DEQ will be notified in writing at the following address at least 10 working days before any groundwater sampling event:

Oregon Department of Environmental Quality
Eastern Region Manager, Solid and Hazardous Waste Programs
400 East Scenic Drive, Suite 307
The Dalles, Oregon 97058
(541) 298-7255

Split-sampling events will be performed in accordance with the schedule and list of monitoring points requested by the DEQ. All split sample events must be scheduled at least 45 days before the sampling event with the DEQ laboratory at the following address:

Oregon Department of Environmental Quality Laboratory
3150 NW 229th Avenue, Suite 150
Hillsboro, Oregon 97214
(503) 693-4999

# 4.0 PRIMARY LEACHATE AND SECONDARY COLLECTION SYSTEM LIQUID MONITORING

## 4.1 INTRODUCTION

This section describes the monitoring networks, the associated sampling schedules, and analytical parameters for the primary leachate collection and removal systems (LCRSs) and the leachate secondary collection systems (LSCSs).

Leachate samples from the LCRSs are monitored to (1) comply with the requirements of the SWDP, (2) provide comparative data for interpreting monitoring data collected from the secondary collection systems, and (3) provide a basis for the selection of groundwater monitoring parameters (discussed in Section 3.4).

Liquid samples from the LSCSs are monitored to (1) detect and, if present, characterize the liquid in the LSCS and (2) determine whether the detected liquid consists of leachate from the primary liner or liquid from other sources.

## 4.2 PRIMARY LEACHATE AND SECONDARY COLLECTION SYSTEMS

The LCRSs remove leachate from landfill modules and route the leachate to a double-lined collection pond. The LSCSs are used to detect and contain potential leaks from the primary LCRSs.

Leachate in Modules 1 to 5, which encompass approximately 39.0 acres (see Figure 1-2), drains to a primary leachate sump (Sump 1/5 P) on the south side of Module 4. This sump was constructed with dual sideslope risers and is equipped with a dedicated submersible pump that discharges to a leachate header leading to the south side of the leachate pond. Leachate in Modules 6 and 7, which total approximately 15.2 acres in size (see Figure 1-2), drains to a primary leachate sump (Sump 6/7 P) on the south side of the modules. Sump 6/7 P is equipped with a dedicated submersible pump that discharges to a separate leachate header leading to the south side of the leachate pond. Leachate in Module 8, which covers approximately 30.9 acres (see Figure 1-2), drains to a primary leachate sump (Sump 8P) located in the northeast corner of this module. Sump 8 P is equipped with a dedicated submersible pump that discharges into a header that discharges into the east side of the leachate pond. Each LCRS pumping system is equipped to allow for calculating flow volume.

Modules 4 and 5 are constructed with a LSCS that drains to a secondary collection sump (Sump 4/5 S). This sump is located below the primary leachate sump in Module 4 (Sump 1/5 P). Modules 6 and 7 are constructed with an LSCS that drains to a secondary collection sump (Sump 6/7 S) located below the primary leachate sump in Module 6 (Sump 6/7 P). Module 8 is constructed with an LSCS that drains to a secondary collection sump (Sump 8S) located below the primary leachate sump in Module 8 (Sump 8P). The LSCS sumps are constructed with sideslope risers and are equipped with dedicated submersible pumps that discharge to the corresponding primary leachate sumps. Each LSCS pumping system is equipped to allow for calculating flow volume.

## 4.3 LCRS AND LSCS MONITORING

### 4.3.1 LCRS Leachate

Leachate samples from the LCRSs are monitored to:

- Provide comparative data for interpreting LSCS monitoring data.
- Provide a basis for the selection of groundwater monitoring parameters (discussed in Section 3.4.5).

### 4.3.2 LSCS Liquid

Liquid samples from the LSCSs are monitored to:

- Detect and characterize the liquid in the LSCS.
- Determine whether the detected liquid consists of leachate leaking through the primary liner or liquid from other sources.

Liquid in a LSCS could be due to the following:

- Leakage through the composite primary liner.
- Water released during consolidation of the overlying low-permeability soil component of the composite primary liner.
- Groundwater infiltration into the LSCS when the groundwater table is elevated.

It is important to note that the LCRSs and the LSCSs together comprise integrated leachate collection and removal systems. Therefore, the presence of liquid in an LSCS is not necessarily an environmental issue because of the following reasons: (1) the LSCSs are separated from the upper WBZ by an engineered high-density polyethylene (HDPE) liner, (2) sources of liquid other than leachate (e.g., consolidation water, shallow groundwater) can enter into those systems, and (3) liquid collected by the LSCSs is collected and managed like leachate.

### 4.3.3 Monitoring Locations

The LCRSs and LSCSs will be sampled at the following eight locations (shown in Figure 1-2):

- Leachate pond.
- Leachate pond secondary collection system.
- Sump 1/5P sideslope riser.
- Sump 6/7P sideslope riser.

- Sump 8P sideslope riser.
- Sump 4/5S sideslope riser.
- Sump 6/7S sideslope riser.
- Sump 8S sideslope riser.

### 4.3.4 Monitoring Schedule and Parameters

The LCRS and LSCS monitoring schedules are summarized in Table 4-1. RL monitors and records liquid levels in the LCRSs and LSCSs daily during normal business days. The SWDP requires RL to monitor and record discharge volumes from each LCRS (i.e., Sump 1/5P, Sump 6/7P, and Sump 8) and LSCS (i.e., Sump 4/5S, Sump 6/7S, and Sump 8S) monthly. Each monitoring location is sampled annually during the second quarter (spring) event between April 1 and May 31 for the parameters listed in Table 4-1.

## 4.4 LEACHATE MANAGEMENT

Leachate is temporarily stored in the leachate pond, located southwest of the landfill modules (see Figure 1-2). The leachate pond has a capacity of approximately 20 million gallons, excluding a 3-foot free-board allowance. Natural evaporation of leachate from the pond occurs during warm, dry periods of the year. Based on the area of the existing leachate pond, pan evaporation values, and average climatic conditions for the site, an estimated 1.5 to 2 million gallons of leachate evaporates annually between April 1 and October 1.

RLC is currently evaluating options, in conjunction with the DEQ, for the long-term management of leachate collected by the LCRSs beneath the landfill modules. RL currently disposes of leachate by truck haul to several off-site wastewater-treatment facilities.

# 5.0 SURFACE WATER MONITORING

## 5.1 INTRODUCTION

Surface water monitoring is not required by RL's SWDP and is performed for informational purposes. Surface water monitoring is performed to assess general South Yamhill River water quality upstream and downstream of RL.

## 5.2 MONITORING NETWORK

The primary surface water bodies in the vicinity of the site include (1) the South Yamhill River to the south, (2) the Unnamed Creek along northeastern and eastern portions of the site, and (3) the Unnamed Drainage that transects the western and central portion of the site. The Unnamed Creek and Unnamed Drainage discharge into the South Yamhill River (see Figure 1-2).

Surface water is sampled from the South Yamhill River at the following locations (see Figure 1-2):

- SYR SW-1 located upstream of the RL operations.
- SYR SW-2 located downstream of the RL operations.

## 5.3 MONITORING SCHEDULE AND PARAMETERS

### 5.3.1 Surface Water Quality

Surface water quality of the South Yamhill River is monitored annually. Surface water samples are collected in accordance with the SAP (Appendix C, Section 2.6, *Surface Water Sampling Procedures*). Surface water samples are analyzed for the constituents listed in Table 5-1. Surface water data are not analyzed statistically because of the significant temporal and spatial variability in surface water chemistry.

# 6.0 STORMWATER MONITORING

Stormwater monitoring and reporting for RL will be performed consistent with and per the requirements of the facility's NPDES 1200-Z industrial stormwater permit and stormwater pollution control plan (SWPCP) (SCS, 2012d). Stormwater monitoring data is reported using the DEQ-approved discharge monitoring report (DMR) form, and therefore is not included in the AEMR.

# 7.0 LANDFILL GAS MONITORING

The landfill gas (LFG) monitoring program and procedures will be performed in accordance with RL's LFGMP (provided in Appendix B). A previous updated version of the LFGMP dated July 2012 (SCS, 2012c) was submitted to the DEQ.

The LFGMP summarizes the regulatory requirements for LFG monitoring, presents the LFG monitoring program and network (including probe construction information), and outlines data evaluation and reporting procedures. The LFGMP is consistent with EPA regulations for MSW Landfills (Subtitle D) (40 CFR, Part 258), and LFG monitoring requirements specified in RL's SWDP.

# 8.0 AIR QUALITY MONITORING

RL has an active landfill gas collection and control system (GCCS) designed to manage LFG emissions while efficiently collecting methane for electrical energy generation by the landfill gas to energy facility (LFGTEF). The GCCS includes various gas collection devices, temporary and intermediate cover over parts of the landfill, the LFGTEF, and a flare. The flare has a 4,500-cubic-feet-per-minute rated capacity and is typically used to destroy excess LFG that is not combusted by the LFGTEF. The flare also serves as a backup device in the event that one or more engines at the LFGTEF shut down.

Air quality monitoring and reporting will be performed consistent with RL's Title V Operating Permit. Air quality monitoring data and results will be submitted as required by the DEQ.

# 9.0 VISUAL INSPECTION

In addition to the analytical-based monitoring described in Sections 3 to 8, visual inspection is also used to identify physical evidence of a release not detected by monitoring and to determine the condition of the monitoring devices (see Appendix C, Section 2.1). Visual inspection is routinely performed typically in conjunction with groundwater monitoring and includes making observations related to the following:

- Unexplained stress in biological communities.
- Visible signs of leachate migration.
- Monitoring device condition, including legibility of identification numbers, condition of security locks, and accessibility of the device location.

In addition to these inspections, landfill personnel should inspect the entire perimeter of the landfill during days when the landfill is in operation. Particular attention is essential during periods of heavy or prolonged precipitation.

Visual observations will be included in RL's AEMRs (see Section 12.1 of this EMP).

# 10.0 SAMPLING AND ANALYSIS PLAN

The SAP for site-specific methods to be used to collect and analyze groundwater, surface water, leachate, and liquid in the LSCSs at RL is provided in Appendix C. The SAP includes sampling documentation requirements, sampling procedures, field QA/QC procedures, sample handling, laboratory QA/QC procedures, analytical methods, and data record-keeping requirements.

The SAP is designed to produce data of acceptable and defensible quality by using appropriate and consistent methods (standard operating procedures) for sample collection, handling, and analysis. The purpose of the SAP is to present appropriate sampling protocols that will provide representative, systematic, and consistent analytical data for all sampled media. When new sampling methods (protocol, equipment, or procedures) are identified, they may be incorporated into this SAP. Requests to change sampling methods will be submitted to the DEQ for review and comment. Changes will be implemented only after the DEQ approves a specific request.

# 11.0 DATA REVIEW AND EVALUATION

## 11.1 INTRODUCTION

This section presents the following information:

- QA/QC procedures for determining the usability of the laboratory data, outlined in the QAM and discussed in Section 11.2, to be performed before the data are evaluated.
- Procedures for reviewing and evaluating field and laboratory analytical data for groundwater, leachate, and LSCS fluid samples to be performed after each sampling event. The procedures include the following:
  - Identifying outliers or anomalies (Section 11.2.2).
  - Comparing routine compliance well analytical results with parameter-specific concentration (prediction) limits, established using statistical analysis of historical compliance well analytical data, and prescriptive concentration limits (Sections 11.3.1).
  - Performing statistical trend and geochemical analysis (Section 11.3.3.3).
- Action requirements that will be followed if a significant change or statistical exceedance(s) is identified (Section 11.4).
- Methods for evaluating leachate and LSCS liquid analytical results (Section 11.5) and LFG monitoring results (Section 11.6).

These processes are generally consistent with (1) Sections 15 and 16 of the SWDP, (2) Section 10.13 of the DEQ's Solid Waste Guidance Document (DEQ, 1996), (3) OAR 340-040 (Groundwater Quality Protection Rules), and (4) DEQ's 2011 IMD (DEQ, 2011).

Statistical evaluation of laboratory data will be performed using the statistical software program DUMPStat®. The DUMPStat® statistical analysis program was used for establishing concentration limits for inorganic parameters using historical background data for groundwater samples collected from the site compliance wells, as described in Section 11.3. DUMPStat also automatically analyzes laboratory results for potential outliers using Dixon's Test (see Section 11.2.2) and performs trend analysis using Sen's Test (see Section 11.3.3.2).

## 11.2 REVIEW OF LABORATORY QA/QC RESULTS

### 11.2.1 QA/QC Review

Each laboratory analytical report contains internal laboratory QA/QC information as well as the sample-specific analytical data. The intent of the QA/QC check is to confirm that the laboratory data meet certain minimum QA/QC standards described in the QAM (see Appendix D) and EPA QA/QC requirements. The reviews will be generally consistent with applicable portions of EPA procedures

(EPA, 1999; 2000) and with appropriate laboratory and method-specific guidelines (EPA, 1986; SM, 1992)

Review of the laboratory data will include the following:

- Cross-checking analyses requested in the chain-of-custody (COC) documentation against analyses listed as performed in the laboratory report.
- Checking computerized data entries.
- Checking the adequacy of reporting limits.
- Calculating cation-anion balances.
- Reviewing field and laboratory QA/QC results, including method blanks, matrix spike samples, and relative percent differences for duplicate sample analysis.

### 11.2.2 Review for Outliers/Anomalies

As part of the data review process, the analytical results for each parameter will be compared with the corresponding historical time-series data using DUMPStat® to identify outliers or anomalies. Outliers or anomalies are inconsistent small or large concentrations that may result from improper sampling, handling, laboratory analytical methods, transcription errors, or chance alone.

If an outlier or anomaly is detected, a data quality review (DQR) will be submitted to the laboratory to determine whether laboratory error is the cause. A DQR is a request submitted to the laboratory to formally review results that differ from historical results or that exceed certain permit requirements or QC criteria. It is the first line of investigation after an anomalous result is detected. The laboratory is required to prepare a formal written response to each DQR, explaining the discrepancy. In addition, the field sampling documentation will be checked to assess whether the outlier or anomaly was associated with the sampling process.

If no cause for an outlier or anomaly is found, the parameter concentration will be checked during the next sampling event or after a reasonable period of time to ensure sample independence (minimum of 6 weeks), unless the concentration meets the criteria for a significant change in groundwater quality (as defined in Section 11.3). In those cases, verification resampling is typically performed consistent with requirements described in Sections 11.4.1 and 11.4.2.

If an outlier or anomaly is confirmed based on subsequent sampling data, the outlier or anomalous result will be excluded from future statistical evaluations and the resample data will be used instead for statistical evaluations. The inclusion of outliers or anomalies in the database used for statistical evaluations could cause misinterpretation of the data set (i.e., high false-positive [an indication of a release when none exists] or false-negative [concluding there is no release when one exists] conclusions) and erroneous statistical limits.

## 11.3 GROUNDWATER QUALITY STANDARDS AND DATA EVALUATION FOR COMPLIANCE MONITORING WELLS

The long-term groundwater monitoring program for RL's site compliance wells is comprised of the following evaluation criteria:

- Establishing permit-specific concentration limits (PSCLs), action limits (ALs), and site-specific limits (SSLs) for selected inorganic and organic parameters appropriate for long-term monitoring (developed using the parameter optimization procedure discussed in Section 3.4).

- Comparing parameter concentrations in groundwater samples collected from each well during each semiannual sampling event to the DEQ-approved concentration limits.

- Performing trend and geochemical analysis.

Consistent with the DEQ's IMD for Developing Groundwater Concentration Limits at Permitted Solid Waste Facilities dated February 2011(DEQ, 2011) and prior agreements and approvals with the DEQ, concentration limits were established as follows:

(1) PSCLs were defined for parameters that have health-based primary standards (vinyl chloride) based on prescriptive regulatory standards (maximum contaminant levels [MCLs] or numerical groundwater quality reference levels [NGQRLs listed in Tables 1 and 2 of OAR 340-040-0020]). Exceedance of a single PSCL not previously reported and explained to the DEQ will trigger verification resampling, and if confirmed, additional action requirements, as described in Section 11.5.

(2) ALs were established for VOCs detected at concentrations above their respective PQLs. Exceedance of a single AL not previously reported and explained to the DEQ will trigger verification resampling, and if confirmed, additional action requirements, as described in Section 11.5.

(3) SSLs were established for the site-specific inorganic parameters[1] classified as basic non-hazardous water quality indicators and that may have secondary MCLs or numerical groundwater quality guidance levels (NGQGLs listed in Table 3 of OAR 340-040-0020). SSLs were established using statistical analysis of background water quality data and methods generally consistent with the DEQ's April 2011 IMD (DEQ, 2011b), as described in Section 11.3.1. Exceedance of three or more SSLs during the same monitoring event in a single well may constitute a significant change in groundwater quality triggering verification resampling, and if confirmed, additional action requirements, as described in Section 11.5.

[1] This includes the inorganic parameters selected for long-term monitoring using the parameter optimization process detailed in Section 3.4 and summarized in Tables 3-2 and 3-3.

### 11.3.1 Establishing Concentration Limits for Inorganic Parameters

#### 11.3.1.1 *Statistically-Derived Site-Specific Concentration Limits*

Statistically derived concentration (prediction) limits (i.e., SSLs) for a given parameter(s) and well(s) represent the concentration(s) above which a potential release from the facility would be indicated. Parameter and well-specific prediction limits were calculated for the approved list of long-term inorganic monitoring parameters (see Tables 3-2 and 3-3) using an intra-well statistical approach and the statistical software program DUMPStat® consistent with methods described in the DEQ's February 2011 IMD (DEQ, 2011).

The intra-well statistical approach uses the historical analytical data for each compliance well to establish prediction limits. Intra-well analysis is more effective than interwell (upgradient-to-downgradient) analysis at RL because it eliminates the spatial variability of natural groundwater chemistry. Application of well-specific background water quality data for establishing concentration limits using intra-well statistical methods is consistent with Subtitle D (Subsection 258.51 [a][1][i]).

Using water-quality data collected from RL's compliance monitoring wells and evaluating the data using intra-well statistical methods for establishing prediction limits is also allowed under the DEQ's April 2011 IMD (DEQ, 2011) if the water-quality data are representative of pre-existing (or unimpacted) groundwater conditions. Evaluations of the RL compliance well background groundwater quality data were performed as part of the development of the 2007 EMP (Shaw, 2007, Appendix H), and the DEQ agreed, in its approval of the 2007 EMP, that the background water-quality data for the compliance wells could be evaluated using intra-well statistical methods (DEQ, 2006a), consistent with DEQ guidance (DEQ, 2003).

The prediction limit is defined as the upper limit of the statistical interval that represents the concentration range computed for a specific analytical parameter from a background dataset that is designed to estimate the characteristics of the parent population. In groundwater monitoring, statistical intervals offer a convenient and statistically valid way to test for significant differences between background and compliance point groundwater measurements. As such, the prediction limit is one of the procedures recommended by the DEQ for formal detection monitoring at permitted solid waste and water-quality facilities in Oregon (DEQ, 2011). Prediction limits for detection monitoring purposes are also recommended in ASTM (2004a; 2005) and EPA (1989; 1992; 2009) guidance and protocols.

A prediction limit was established for each monitoring parameter and monitoring well using a defined background data set unique to that well/parameter (i.e., an intra-well prediction limit). Both WM and the DEQ evaluated the compliance well background data to identify statistical outliers and anomalous data that should be excluded in the statistical analysis process. The well-specific background water quality data used to calculate prediction limits for the site-specific inorganic parameters were reviewed by the DEQ prior to performing the statistical analysis. Well and parameter specific analytical data used to calculate each prediction limit is provided in Appendix E.

In calculating prediction limits, DUMPStat® performs a distributional analysis to determine the appropriate statistic (i.e., parametric normal/lognormal versus nonparametric) (see Appendix E). DUMPStat® requires at a minimum of 8 background data points for parametric prediction limits and 13 background data points for nonparametric prediction limits in order to achieve an adequate

confidence level, assuming a "pass one of one" discrete retest (i.e., verification resampling) procedure. For a dataset with a nonparametric distribution, the prediction limit was established at the second highest detected value in the background data set (except for K in MW-14A groundwater), consistent with the guidelines DEQ's IMD (DEQ, 2011). For parametric-based prediction limits, DUMPStat® calculates a 95percent prediction limit, adjusting for multiple future comparisons, using the following formula:

$$\bar{x} + t_{[n-1,\alpha]}\, s \sqrt{1 + \frac{1}{n}}$$

Where:

$$\bar{x} = \sum_{i-1}^{n} \frac{x_i}{n}$$

$$s = \sqrt{\sum_{i=1}^{n} \frac{(x_i - \bar{x})^2}{n-1}}$$

$\alpha$ = false positive rate for each individual test ($\alpha$ = 0.01 is selected for most applications).

$t_{[n-1,\alpha]}$ = one-sided (1-$\alpha$) 100% point of Student's t distribution on $n$-1 degrees of freedom.

$n$ = number of background measurements.

The results of the DUMPStat® statistical analysis and related information for calculating well-specific predictions limits for the long-term monitoring parameters are provided in Appendix E. A summary of the prediction limits for each compliance well is presented in Table 11-1.

Future groundwater quality data for samples collected from the site compliance monitoring wells will be combined with the historical data to calculate new intra-well statistical prediction limits in conjunction with the permit review and permit renewal schedule (to be determined once the new permit is issued) provided there has been no indication of a significant change in groundwater quality. This process typically improves the statistical power of the monitoring program by decreasing data variance.

#### 11.3.1.2 *Prescriptive Concentration Limits*

Prescriptive concentration limits (PSCLs and ALs) have been established for parameters that have health-based primary standards per the requirements of the DEQ as follows:

(1) A PSCL for vinyl chloride was established at regulatory standard (MCL or NGQRL) of 2 micrograms per liter (µg/L) for all compliance well groundwater.

(2) ALs were also established for the VOCs at the parameter-specific laboratory-derived PQL for all compliance well groundwater.

### 11.3.2 Data Evaluation

An evaluation of routine (semiannual) groundwater analytical data for compliance well groundwater samples will be performed to determine whether a parameter(s) has been detected at a concentration(s) that indicates a potentially significant change in groundwater quality. A potentially significant change in groundwater quality based on routine compliance monitoring analytical results may be indicated by one or more of the following criteria:

- Confirmed detection of vinyl chloride at concentrations above the prescriptive concentrations limits (listed in Table 11-1) in any compliance well groundwater sample (exceedance of a PSCL during a monitoring event).

- Confirmed detections of three or more SSLs (listed in Table 11-1) in a single groundwater sample collected from any compliance well during a single monitoring event.

- Confirmed detection of one or more VOCs above an AL (established at the PQL) analyzed using EPA Method 8260B and 8011. Since VOCs typically do not occur naturally in groundwater, any VOC detected and verified at a concentration above the PQL would be considered potentially significant.

If a potentially significant change in groundwater quality is identified, follow-up actions described in Section 11.5 will be performed.

In addition to the statistical triggers and the VOC analytical and evaluation program outlined above, trend analysis using Sen's Test will also be performed on groundwater analytical data collected from the site compliance monitoring wells (for the routine parameters specified in Table 3-4) to assess more gradual or longer-term water quality changes. The DUMPStat® statistical program will be used to generate intra-well time series graphs of all inorganic chemical parameters routinely analyzed in groundwater samples collected from the site compliance wells, including the supplemental geochemical parameters (as described in Section 3.4.9). The analytical results for each parameter will also be compared with the corresponding historical time-series data to assess anomalously high results and gross concentration variations not attributable to spatial variability. This combined visual and statistical data evaluation approach will facilitate identification of a change in groundwater quality should one occur. Piper (trilinear) and Stiff diagrams will also be prepared and reviewed to assess groundwater geochemical conditions.

Analytical results for the 5-year full-parameter scan of groundwater samples collected from the site compliance, and upgradient monitoring wells, as described in Section 3.4.10 and summarized in Table 3-4, will be evaluated to determine whether any parameter concentrations have increased significantly compared with historical concentrations.

## 11.4 DATA EVALUATION FOR DETECTION MONITORING WELLS

Consistent with DEQ guidance, statistically-derived concentration limits are not required to be established for groundwater samples collected from the site detection monitoring wells. Instead, changes in detection monitoring well groundwater quality will be evaluated using the following methods:

- Identification of significant increasing trends in any inorganic parameter. The analytical results for each parameter will be compared with the corresponding historical time-series data to assess statistically significant trends using Sen's Test (as previously described for the compliance monitoring wells).

- Identification of a significant change in concentration of any inorganic parameter. A significant change would be identified if a parameter is detected at a concentration an order of magnitude higher than historical values.

Analytical results for the 5-year full-parameter scan of groundwater samples collected from the site detection monitoring wells, as described in Section 3.4.10 and summarized in Table 3-4, will be evaluated to determine whether any parameter concentrations have increased significantly compared with historical concentrations.

## 11.5 ACTION REQUIREMENTS

This section describes actions that will be taken if the evaluation criteria defining a significant change in groundwater quality presented in Section 11.3.2 (i.e., exceedance of a PSCL, exceedances of three or more SSLs, or detection of one or more VOCs above an AL [PQL]) are met. The response actions are consistent with those specified in OAR 340-40-030(5) and the DEQ's IMD (DEQ, 2011).

### 11.5.1 Verification Resampling

Resampling is an integral part of the statistical methodology described in the DEQ's IMD (DEQ, 2011). Without resampling, much larger statistical limits would be required to achieve site-wide false-positive rates of 5 percent or less. The resulting false-negative rate would also be greatly increased.

A significant change in groundwater quality defined by (1) exceendance of a PSCL (for vinyl chloride), (2) exceedances of three of more SSLs in a single groundwater sample, or (3) detection of any VOC above the AL will trigger a confirmation resampling event if the significant change has not been previously reported to the DEQ, and is not attributable to sample handling or laboratory contamination. In such cases, DEQ will be notified in writing within 10 days of the receipt of verified laboratory data, and verification resampling/reanalysis for the constituent(s) of concern will be performed at the appropriate monitoring location(s) within seven days of notifying the DEQ. If the parameter(s) represents a known change in water quality previously confirmed in writing to DEQ, resampling may not be performed.

### 11.5.2 Notification of Resampling Results

The resampling results will be reviewed and evaluated using the same procedures previously discussed in Section 11.2. If the resampling results confirm the significant change in groundwater quality, RLC will notify the DEQ within 10 days of receipt of final laboratory analytical data or within 60 days of the date of resampling, whichever comes sooner. The notification will identify the monitoring well and associated parameter(s). If the resampling results do not confirm that a significant change in groundwater quality occurred, then routine compliance monitoring will be resumed and the data from both the routine and the resampling events will be discussed in the next annual environmental monitoring report.

### 11.5.3 Preliminary Assessment and Assessment Monitoring

If resampling results confirm the exceedance or significant change in groundwater quality, and if the change in groundwater quality cannot be explained after reviewing the original laboratory data, QA/QC reports, sampling protocols, and the resampling results, the following actions will be taken:

- If a PSCL is exceeded, RLC will submit a PA work plan within 30 days after the DEQ is notified, unless another schedule is approved by the DEQ. The PA work plan will explain the action RLC is taking to assess the source and extent of the constituent of concern, present a schedule for implementing the PA activities, and recommend further action, if necessary. Any further action will be consistent with OAR 340-40-030(5).

  In accordance with Subtitle D and DEQ guidance (DEQ, 1995), the PA may involve a demonstration by RLC to determine if the source of the identified significant change in groundwater quality is from the monitored facility, an alternative off-site source, or natural variability of the groundwater zone(s) being monitored. Further evaluation may include an assessment of changes in (1) water levels, hydraulic gradients, and other applicable hydrogeologic conditions or (2) facility operations. In addition, the overall groundwater chemistry (cation/anion composition) at the site may also be evaluated through a geochemical mixing analysis using Piper and Stiff diagrams. These plots may be used to compare groundwater quality differences both temporally and spatially, and to help differentiate between natural background variation and potential contaminant sources. The intent of this additional geochemical analysis is to provide further evidence for identifying the source of the change in groundwater quality, and thus minimize the potential for false conclusions. A report documenting the finding of the PA will be submitted to the DEQ.

- If an AL or three or more SSLs are exceeded, RLC will submit an IPA work plan within 30 days after the DEQ is notified, unless another schedule is approved by the DEQ. The IPA work plan will explain the action being taken by RLC to assess the source, extent, and potential migration of the constituent(s) of concern, present a schedule for implementing the IPA activities, and recommend further action, if necessary.

If the PA or IPA is successful and indicates that the source of the change in groundwater quality is not attributed to the landfill, the site will resume the routine compliance monitoring program. If a successful PA demonstration is not made within 90 days, then RLC will submit a remedial

investigation (RI) work plan for DEQ approval, which describes how the objectives of OAR 340-40-040(3) will be met by the RI. RLC will also implement an assessment monitoring program, developed in conjunction with and approved by the DEQ, to determine whether risk-based water quality criteria (ecological assessment values specified in OAR 340-041, Table 20, and DEQ Ecological Screening Levels) are being influenced by the significant change in groundwater quality.

## 11.6 LEACHATE AND SECONDARY COLLECTION SYSTEM LIQUID DATA EVALUATION

Analytical results of liquid samples collected from the LCRSs and LSCSs will be reviewed to determine that it meets QA/QC protocols and to identify outliers and anomalies. Periodic leachate sampling is important for selecting appropriate inorganic indicators parameters to be used for long-term groundwater compliance monitoring, as discussed in Section 3.4.5, and to characterize the organic and inorganic chemistry of site leachate. The results will not be analyzed statistically.

Analytical results of liquid detected in the LSCSs will be reviewed to assess its origin. The evaluation will involve comparing the LSCS analytical results with historical parameter concentrations and site-specific leachate chemistry, and may include determining the geochemical signature of the LSCS liquid samples and leachate (using trilinear diagrams, Stiff plots, or similar analyses). The evaluation will also include reviewing and comparing LCRS and LSCS pumping volumes. If the results of the evaluation indicate that the source of the LSCS liquid may be from leachate, it will be resampled to verify the results. The results will be reported to DEQ within 60 days after the verification samples are collected. If the resampling results indicate that leachate has entered the LSCS, RLC will work in conjunction with the DEQ to determine the significance of the results and what further actions may be appropriate.

## 11.7 EVALUATION OF LANDFILL GAS MONITORING DATA

LFG monitoring data collected from each probe and facility structure monitoring location will be compared with the historical data and with regulatory limits. If a reading appears abnormal, the monitoring will be repeated to confirm the result. If a regulatory limit is exceeded, DEQ will be notified, an entry will be made in the operating record, and appropriate measures will be taken to mitigate and monitor the situation including, if appropriate, an increased monitoring frequency, as described in the LFGMP (see Appendix B).

# 12.0 REPORTING

## 12.1 INTRODUCTION

This section presents the requirements for reporting environmental monitoring data, consistent with Section 17 of the SWDP, including the AEMR, Annual Leachate Treatment Report, Annual Landfill Gas System Report, and split sampling information.

## 12.2 ANNUAL ENVIRONMENTAL MONITORING REPORT

### 12.2.1 Contents

The AEMR will include the following, consistent with Sections 12.1 to 17.4 of the SWDP and additional requirements requested by the DEQ (DEQ, 2012b; 2013b):

- Executive summary.
- Review of all significant events that occurred at RL during the reporting year.
- Review of monitoring network performance and recommendations for improvement, if applicable.
- Summary of monitoring data collected in the reporting year
- Summary of data problems, such as QA/QC failures, flagged data, or switched samples.
- Documentation of any activities resulting from the exceedance of a relevant standard or significant change in groundwater quality, such as resampling, submittal of a preliminary assessment work plan, or implementation of assessment monitoring.
- Piezometric maps from each sampling event for both WBZs.
- Table showing groundwater elevations in paired wells and the vertical gradients at each well pair location.
- Maintenance and inspection issues related to the MSE berm.[2]
- Monthly volume of leachate removed from each LCRS sump.
- Monthly volume of liquid removed from each LSCS sump.
- Monthly volume of leachate disposed of by each leachate treatment method.

[2] The maintenance and inspection program and activities for the MSE berm are included in an updated version of RL's operations plan (RLC, 2013) that was submitted under separate cover in response to the DEQ conditions of approval of the MSE berm presented in its May 30, 2013 letter (DEQ, 2013b).

- Time-concentration plots for groundwater constituents monitored on a routine basis.
- Stiff and Piper diagrams for select cations and anions.
- Anion-cation balance for each sampling event, where applicable.
- Discussion of the results of the reporting year's data and evaluation.
- Copies of applicable information, including field data, laboratory analytical reports, and COC forms.
- Compact disk (CD) containing electronically formatted (Adobe Acrobat™) laboratory reports (including laboratory QA/QC documentation) for groundwater, surface water, leachate, and LSCS liquid samples collected in each monitoring year.

### 12.2.2 Submittal Requirements

The AEMR will summarize the monitoring activities for the previous year and will be signed and stamped by either an Oregon Registered Geologist, an Oregon Registered Engineer, or an Oregon Registered Engineering Geologist with experience in hydrogeological investigations. The report will contain an executive summary that:

- Compares the analytical results with the relevant monitoring standards.
- States whether a significant change in water quality occurred.

The AEMR will be double-sided copied (where applicable) and submitted to the DEQ by April 30 of each year. One copy of the AEMR will be submitted to the following DEQ offices and personnel, unless requested otherwise in the future by the DEQ.

Mr. Bob Schwarz
Manager
Oregon Department of Environmental Quality
Eastern Region, Solid and Hazardous Waste Programs
400 East Scenic Drive, Suite 307
The Dalles, Oregon 97058
(541) 298-7255

Ms. Audrey Eldridge
Senior Hydrogeologist
Oregon Department of Environmental Quality
Western Region, Solid Waste Program
221 Stewart Avenue Suite 201
Medford, Oregon 97501
(541)776-6010

Ms. Holly Pence
Solid Waste Permit Coordinator
Oregon Department of Environmental Quality
Northwest Region, Solid Waste Program
2020 SW Fourth Avenue, Suite 400
Portland, OR 97201
(503) 229-5263

## 12.3 SPLIT-SAMPLING INFORMATION SUBMITTAL

A copy of the following information is required to be submitted within 90 days after each split-sampling event, consistent with Sections 17.8 and 17.9 of the SWDP:

- All information pertinent to the sample collection, handling, transport, and storage, including field notes.
- All laboratory analytical reports.
- All laboratory QA/QC reports.
- Groundwater contour map.
- Any other data or reports requested by DEQ.

The split-sampling report will be sent to the following address:

Oregon Department of Environmental Quality Laboratory
3150 NW 229th Avenue, Suite 150
Hillsboro, Oregon 97214
(503) 693-4999

# 13.0 REFERENCES

American Society for Testing and Materials (ASTM). 2004. *Standard Guide for Optimization of Ground Water Monitoring Constituents for Detection Monitoring Programs for RCRA Waste Disposal Facilities*. D7045-04. ASTM. June.

American Society for Testing and Materials (ASTM). 2005, *Standard guide for developing appropriate statistical approaches for groundwater detection monitoring programs*. West Conshohocken. PA. ASTM International.

CH2M Hill. 2000. Technical memorandum (re: Installation of eight new monitoring wells at Riverbend Landfill) to G. Duvendack, Riverbend Landfill, from B. Long, CH2M Hill, Portland, Oregon. November 21.

Cravy, T. D., P. McIsaac, and R. D. Gibbons. 1990. Evaluation of organic indicator parameters using an Appendix VII/IX Database: presented at Waste Tech '90, Landfill Technology: Back to Basics. San Francisco, California.

Oregon Department of Environmental Quality (DEQ). 1992. *Groundwater Monitoring Well Drilling, Construction, and Decommissioning*. Guidance document. DEQ. August 24.

Oregon Department of Environmental Quality (DEQ). 1995. Proposed guidance for significant increases of monitored constituents in groundwater at permitted solid waste disposal facilities and preliminary assessment report requirements. Draft memorandum. DEQ. October 31.

Oregon Department of Environmental Quality (DEQ). 1996. *Solid Waste Guidance, Municipal Solid Waste Landfills*. DEQ. September 1.

Oregon Department of Environmental Quality (DEQ). 1998. Letter (re: response to preliminary assessment at Riverbend Landfill) to R. North, Riverbend Landfill Co., Inc., USA Waste, from C. Donaldson, DEQ, Salem, Oregon. February 27.

Oregon Department of Environmental Quality (DEQ). 2000. Letter (re: 1999 annual environmental monitoring report, Riverbend Landfill; SW Project No. 1352) to D. Wilson, Riverbend Landfill Co., Inc., from M. Morshed, DEQ, Salem, Oregon. May 12.

Oregon Department of Environmental Quality (DEQ). 2001. Letter (re: review of 2000 annual environmental monitoring report and well decommissioning report, Riverbend Landfill) to D. Wilson, Riverbend Landfill, McMinnville, Oregon, from R. S. Barrows, DEQ, Salem, Oregon. June 26.

Oregon Department of Environmental Quality (DEQ). 2003. *Internal Management Directive (IMD): Monitoring Background Groundwater Quality for Regulating Permitted Operations under OAR 340-040-0030*. DEQ. July 29.

Oregon Department of Environmental Quality (DEQ). 2004. Letter (re: Riverbend Landfill, Yamhill County; Solid Waste Disposal Permit No. 214) to G. Duvendack, Waste Management, McMinnville, Oregon, from R. H. Larsen, DEQ, Portland, Oregon. December 1.

Oregon Department of Environmental Quality (DEQ). 2006a. E-Mail (re: RE: Riverbend EMP) to J. Obereiner, Waste Management, Inc., from R. Weick, DEQ, Portland, Oregon. October 9.

Oregon Department of Environmental Quality (DEQ). 2006b. E-Mail (re: RE: Riverbend EMP) to J. Obereiner, Waste Management, Inc., from R. Weick, DEQ, Portland, Oregon. October 16.

Oregon Department of Environmental Quality, 2010, Email (re: Riverbend Landfill), to J. Obereiner, Waste Management, Inc., from A. Eldridge, Oregon Department of Environmental Quality, Portland, Oregon, February 24.

Oregon Department of Environmental Quality (DEQ). 2011. *Internal Management Directive (IMD): Developing concentrations limits at permitted solid waste and water quality facilities*. February.

Oregon Department of Environmental Quality (DEQ), 2012a, Email (re: Work plan for installation of P-07A, sampling) to J. Obereiner, Waste Management, Gold River, California, from B. Schwarz, DEQ, The Dalles, Oregon, February 2.

Oregon Department of Environmental Quality (DEQ), 2012b, Letter (re: 2011 Riverbend Annual Environmental Monitoring Report, Yamhill County SWDP #345), to L. Pierce, Riverbend Landfill Company, McMinnville, Oregon, from A. Eldridge, DEQ, Medford, Oregon, November 13.

Oregon Department of Environmental Quality (DEQ), 2013a, Letter (re: NPDES 1200-Z Industrial Stormwater Permit Renewal, Riverbend Landfill, File No. 106959) to P. Burns, Riverbend Landfill, McMinnville, Oregon, from K. Jacobsen, DEQ, Eugene, Oregon, June 13.

Oregon Department of Environmental Quality (DEQ), 2013b, Letter (re: Approval of Mechanically Stabilized Earthen Berm, Riverbend Landfill, Solid Waste Permit No. 345, Yamhill County) to F. Willmann, Waste Management, Bainbridge Island, Washington, from E. Druback, DEQ, The Dalles, Oregon, May 30.

EMCON. 1994. *Additional Hydrogeologic Investigation Report*, Riverbend Landfill, Yamhill County, Oregon. Prepared for Riverbend Landfill Co., Inc., by EMCON Northwest, Inc., Portland, Oregon. July 29.

EMCON. 1995. Letter (re: Riverbend Landfill, installation of monitoring wells MW-12A and MW-12B) to D. Wilson, Riverbend Landfill Company, Inc., McMinnville, Oregon, from L. Caruso and C. Fanshier, EMCON, Portland, Oregon. August 22.

EMCON. 1996. Installation of new compliance boundary monitoring wells and decommissioning of monitoring wells MW-8A and MW-8B. EMCON, Portland, Oregon.

Gibbons, R. D. 1994. *Statistical Methods for Groundwater Monitoring*. New York: John Wiley and Sons.

HWA GeoSciences, Inc. (HWA). 2001. Letter (re: informal preliminary assessment to address water-quality issues in MW-12B, Riverbend Landfill) to R. North, Waste Management, Inc., Portland, Oregon, from L. Caruso and K. Mathiot, HWA, Lake Oswego, Oregon. April 13.

Plumb, R.H. 1991. The occurrence of Appendix IX organic constituents in disposal site groundwater: Groundwater Monitoring Review 11 (2):157-164.

Riverbend Landfill Company, Inc. (RLC). 2013. *Operations Plan* (Revised), Riverbend Landfill, McMinnville, Oregon. Prepared by RLC, McMinnville, Oregon. July 29.

SCS Engineers (SCS), 2011, Letter(re: Report of drilling and piezometer/monitoring well Installations for hydrogeologic site characterization in support of landfill expansion permitting, Riverbend Landfill, McMinnville, Oregon), prepared for Riverbend Landfill Company, Inc., McMinnville, Oregon, by SCS, Portland, Oregon, March.

SCS Engineers (SCS), 2012a, Letter(re: Work plan to install additional piezometer and collect groundwater quality data: Riverbend Landfill, McMinnville, Oregon), prepared by SCS, Portland, Oregon for Waste Management, Gold River, California. January 26.

SCS Engineers (SCS), 2012b, Letter(re: *Report of piezometer P-07A installation: Riverbend Landfill, McMinnville, Oregon),* prepared for Waste Management, Gold River, California, by SCS, Portland, Oregon, March 9.

SCS Engineers, 2012c, *Landfill Gas Monitoring Plan*, Riverbend Landfill, Yamhill County, Oregon, prepared for Riverbend Landfill Company, Inc., McMinnville, Oregon, by SCS Engineers, Portland, Oregon, July 30.

SCS Engineers (SCS), 2012d, *Stormwater Pollution Control Plan, Riverbend Landfill, McMinnville, Oregon*, prepared by SCS, Portland, Oregon for the Riverbend Landfill Company, McMinnville, Oregon, October.

SCS Engineers (SCS), 2013a, Letter (re: Work plan to decommission piezometers P-04A/P-04B and landfill gas probe PGP-05 and install new probe CGP-8R, Riverbend Landfill, McMinnville, Oregon), prepared by SCS, Portland, Oregon for Waste Management, Portland, Oregon, June 13.

SCS Engineers (SCS), 2013b, Letter (re: Report documenting piezometer and gas probe decommissioning and gas probe installation, Riverbend Landfill, McMinnville, Oregon,) prepared by SCS, Portland, Oregon for Waste Management, Portland, Oregon, July 24.

Shaw Environmental, Inc. (Shaw), 2005, Letter (re: Installation report for temporary monitoring wells P-05A and P-06A, Riverbend Landfill, McMinnville, Oregon), prepared for Riverbend Landfill Company, McMinnville, Oregon, by Shaw, Portland, Oregon, November 10.

Shaw Environmental, Inc. (Shaw). 2007. *Environmental Monitoring Plan*, Riverbend Landfill, Yamhill County, Oregon. Prepared for Waste Management, Inc, by Shaw, Portland, Oregon. December.

SM. 1992. Standard methods for the examination of water and wastewater. 18th edition.

USA Waste, Inc. (USAW). 1997. *Preliminary Assessment Report*, Riverbend Landfill, Yamhill County, Oregon. Prepared for Riverbend Landfill Co., Inc., by USAW, San Rafael, California. December 30.

U.S. Environmental Protection Agency (EPA). 1986. Test methods for evaluating solid waste: physical/chemical methods. EPA, Office of Solid Waste and Emergency Response. EPA-530/SW-846. September (update 1, July 1992; update 2a, August 1993; update 2, September 1994; update 2b, January 1995).

U.S. Environmental Protection Agency (EPA). 1989. *Statistical analysis of ground-water monitoring data at RCRA facilities: Interim Final Guidance*. Washington, D.C. EPA, Office of Solid Waste.

U.S. Environmental Protection Agency (EPA). 1999. EPA contract laboratory program, national functional guidelines for organic data review. EPA, Office of Emergency and Remedial Response. EPA 540/R-99/008. October.

U.S. Environmental Protection Agency (EPA). 2000. EPA contract laboratory program, national functional guidelines for inorganic data review. EPA, Office of Emergency and Remedial Response. EPA 540/R-04-004. October.

U.S. Environmental Protection Agency (EPA). 2009. *Statistical Analysis Groundwater Monitoring Data at RCRA Facilities, Unified Guidance*, Office of Resource Conservation and Recovery Program Implementation and Information Division, EPA 530-R-09-007, March.

Oregon Water Resources Department (OWRD). 1994. *Administrative Rules for Construction and Maintenance of Monitoring Wells and Other Holes in Oregon*. OWRD. January.

# TABLES

# Table 3-1
## Groundwater Monitoring Network Construction Information
## Riverbend Landfill

| Well Designation | Hydro-stratigraphic Unit Screened | Date Installation Completed | Eastings[a] | Northings[a] | Ground Elevation[a] (ft-msl) | TOC Elevation[a] (ft-msl) | Boring Depth (ft-bgs) | Boring Diameter (inches) | Well Diameter (inches) | Well Screen Interval (ft-bgs) | Sand Pack Interval (ft-bgs) | Well Seal Interval (ft-bgs) |
|---|---|---|---|---|---|---|---|---|---|---|---|---|
| ***Monitoring Wells*** | | | | | | | | | | | | |
| MW-1A | Sand-Gravel | 6-Sep-89 | 3999.9 | 4210.2 | 153.40 | 155.30 | 61.5 | 10 | 2 | 50.0 to 60.0 | 48.0 to 61.5 | 3.0 to 48.0 |
| MW-1B | Silt-Clay | 8-Sep-89 | 4001.1 | 4214.5 | 153.40 | 155.00 | 26.5 | 10 | 2 | 15.0 to 25.0 | 13.0 to 26.5 | 3.0 to 13.0 |
| MW-2 | Silt-Clay | 26-Jan-81 | 5123.7 | 4126.2 | 146.30 | 148.30 | 40.0 | NA | 2 | NA | NA | NA |
| MW-5A | Silt-Clay | 8-Sep-92 | 5490.7 | 2069.0 | 132.00 | 138.73 | 28.0 | 10 | 2 | 18.0 to 28.0 | 16.0 to 28.0 | 3.0 to 16.0 |
| MW-5B | Sand-Gravel | 9-Mar-92 | 5481.2 | 2073.1 | 132.80 | 138.88 | 44.7 | 10 | 2 | 42.0 to 45.0 | 40.0 to 45.0 | 3.0 to 40.0 |
| MW-9A | Silt-Clay | 21-Oct-93 | 6486.5 | 3663.2 | 128.10 | 128.42 | 24.5 | 8 | 2 | 14.3 to 23.8 | 27.0 to 40.0 | 2.0 to 11.0 |
| MW-9BR | Sand-Gravel | 24-Aug-94 | 5903.2 | 3760.8 | 124.76 | 127.40 | 36.5 | 10 | 2 | 28.2 to 33.7 | 27.0 to 37.5 | 2.0 to 26.0 |
| MW-10A | Silt-Clay | 28-Oct-93 | 3501.0 | 3805.0 | 150.75 | 153.21 | 28.3 | 8 | 2 | 17.3 to 26.8 | 14.0 to 28.3 | 2.2 to 14.0 |
| MW-10B | Sand-Gravel | 27-Oct-93 | 3492.5 | 3795.5 | 150.76 | 152.87 | 69.0 | 10 | 2 | 44.3 to 53.8 | 40.9 to 55.3 | 2.0 to 40.9 |
| MW-12A | Silt-Clay | 19-Jul-95 | 5650.8 | 1676.5 | 123.80 | 126.00 | 25.5 | 10 | 2 | 15.3 to 24.8 | 12.0 to 25.5 | 0.5 to 15.3 |
| MW-12B | Sand-Gravel | 19-Jul-95 | 5643.6 | 1676.5 | 124.00 | 126.54 | 49.9 | 10 | 2 | 34.3 to 43.8 | 31.0 to 45.0 | 0.5 to 31.0 |
| MW-14A | Silt-Clay | 16-Oct-96 | 4863.8 | 1652.6 | 118.80 | 121.87 | 21.0 | 10 | 2 | 10.7 to 20.2 | 7.8 to 21.0 | 2.2 to 7.8 |
| MW-14B | Sand-Gravel | 15-Oct-96 | 4854.1 | 1653.7 | 119.10 | 123.32 | 42.0 | 10 | 2 | 31.7 to 41.2 | 2.85 to 42.0 | 2.2 to 28.5 |
| MW-15A | Silt-Clay | 21-Oct-96 | 6385.5 | 2209.1 | 126.00 | 130.07 | 22.8 | 10 | 2 | 12.5 to 22.0 | 10.0 to 22.8 | 2.0 to 10.0 |
| MW-15B | Sand-Gravel | 21-Oct-96 | 6393.5 | 2214.7 | 126.00 | 129.73 | 44.0 | 10 | 2 | 33.2 to 42.7 | 30.2 to 44.0 | 2.0 to 30.2 |
| MW-16A | Silt-Clay | 23-Oct-96 | 7010.7 | 2675.6 | 126.30 | 128.89 | 23.5 | 10 | 2 | 13.5 to 23.0 | 11.0 to 23.5 | 1.5 to 11.0 |
| MW-16B | Sand-Gravel | 23-Oct-96 | 7004.3 | 2670.7 | 126.30 | 128.95 | 45.0 | 10 | 2 | 34.8 to 44.3 | 31.6 to 45.0 | 2.0 to 31.6 |
| MW-17A | Silt-Clay | 26-Sep-00 | 1221.4 | 1431.4 | 151.12 | 153.83 | 24.5 | 10 | 2 | 14.0 to 24.0 | 11.5 to 24.5 | 0.5 to 11.5 |
| MW-18A | Silt-Clay | 26-Sep-00 | 2612.9 | 2938.0 | 146.77 | 148.77 | 26.0 | 10 | 2 | 13.5 to 23.5 | 11.0 to 24.0 | 0.5 to 11.0 |
| MW-18B | Sand-Gravel | 26-Sep-00 | 2621.6 | 2931.1 | 146.58 | 148.57 | 62.0 | 10 | 2 | 47.0 to 53.0 | 45.0 to 53.0 | 0.5 to 45.0 |
| MW-19A | Silt-Clay | 27-Sep-00 | 2537.0 | 1437.0 | 149.05 | 151.27 | 30.0 | 10 | 2 | 18.0 to 28.0 | 18 .5 to 28.5 | 0.5 to 16.5 |
| MW-20A | Silt-Clay | 26-Sep-00 | 3776.2 | 2490.1 | 127.20 | 129.92 | 21.0 | 10 | 2 | 10.0 to 20.0 | 8.5 to 21.0 | 0.5 to 8.5 |
| MW-20B | Sand-Gravel | 26-Sep-00 | 3759.5 | 2491.2 | 127.10 | 129.72 | 40.0 | 10 | 2 | 29.0 to 34.0 | 26.5 to 95.3 | 0.5 to 26.5 |
| MW-21A | Silt-Clay | 26-Sep-00 | 4645.5 | 1945.3 | 116.18 | 120.02 | 13.0 | 10 | 2 | 8.0 to 13.0 | 7.0 to 23.0 | 0.5 to 7.0 |
| MW-21B | Sand-Gravel | 26-Sep-00 | 4631.3 | 1941.6 | 116.56 | 119.53 | 34.0 | 10 | 2 | 21.0 to 26.0 | 18.5 to 27.0 | 0.5 to 18.5 |
| MW-22A | Silt-Clay | 23-Sep-10 | 4105.3 | 1578.5 | 123.50 | 125.38 | 22.5 | 10 | 2 | 10.0 to 20.0 | 8.0 to 21.0 | 2.0 to 8.0 |
| MW-22B | Sand-Gravel | 23-Sep-10 | 4110.8 | 1584.6 | 123.50 | 125.43 | 38.0 | 10 | 2 | 27.0 to 37.0 | 25.0 to 38.0 | 2.0 to 25.0 |
| MW-23A | Silt-Clay | 18-Aug-10 | 3281.9 | 1515.9 | 129.00 | 131.79 | 28.0 | 10 | 2 | 16.0 to 26.0 | 14.0 to 28.0 | 2.0 to 14.0 |
| MW-23B | Sand-Gravel | 17-Aug-10 | 3290.0 | 1516.5 | 129.00 | 131.60 | 42.0 | 10 | 2 | 36.5 to 41.5 | 34.5 to 42.0 | 2.0 to 34.5 |
| MW-24A | Silt-Clay | 20-Aug-10 | 2140.0 | 984.2 | 147.50 | 149.93 | 26.0 | 10 | 2 | 15.0 to 25.0 | 13.0 to 26.0 | 2.0 to 13.0 |
| ***Piezometers*** | | | | | | | | | | | | |
| MW-3A | Silt-Clay | 23-Jun-93 | 4430.9 | 2493.9 | 138.20 | 140.81 | 35.0 | 8 | 2 | 24.0 to 34.0 | 21.0 to 35.0 | 2.2 to 21.0 |
| MW-3B | Sand-Gravel | 28-Jun-93 | 4415.6 | 2496.3 | 137.80 | 140.57 | 63.5 | 10 | 2 | 45.0 to 55.0 | 42.0 to 56.0 | 36.8 to 42.0 |
| MW-4A | Silt-Clay | 25-May-93 | 4798.0 | 2238.7 | 139.46 | 142.31 | 36.0 | 8 | 2 | 26.0 to 36.0 | 22.5 to 36.0 | 2.0 to 22.5 |
| MW-4B | Sand-Gravel | 10-Jun-93 | 4805.5 | 2239.4 | 139.24 | 141.81 | 72.0 | 10 | 2 | 52.0 to 62.0 | 49.0 to 63.0 | 47.0 to 49.0 |
| MW-6A | Silt-Clay | 24-May-93 | 6043.5 | 2437.7 | 127.00 | 128.95 | 22.5 | 8 | 2 | 11.5 to 21.5 | 8.5 to 22.5 | 2.0 to 8.5 |
| MW-6B | Sand-Gravel | 9-Jun-93 | 6054.4 | 2443.0 | 127.00 | 128.59 | 56.0 | 8 | 2 | 36.0 to 46.0 | 34.2 to 47.0 | 2.5 to 34.2 |

# Table 3-1
## Groundwater Monitoring Network Construction Information
## Riverbend Landfill

| Well Designation | Hydro-stratigraphic Unit Screened | Date Installation Completed | Eastings[a] | Northings[a] | Ground Elevation[a] (ft-msl) | TOC Elevation[a] (ft-msl) | Boring Depth (ft-bgs) | Boring Diameter (inches) | Well Diameter (inches) | Well Screen Interval (ft-bgs) | Sand Pack Interval (ft-bgs) | Well Seal Interval (ft-bgs) |
|---|---|---|---|---|---|---|---|---|---|---|---|---|
| ***Piezometers (continued)*** | | | | | | | | | | | | |
| P-01 | Silt-Clay | 21-Dec-92 | 5482.1 | 2038.3 | 123.20 | 125.93 | 19.0 | 8 | 2 | 8.0 to 18.0 | 5.9 to 19.0 | 2.0 to 5.9 |
| P-02 | Silt-Clay | 22-Dec-92 | 5498.5 | 1994.0 | 121.10 | 123.88 | 18.0 | 8 | 2 | 6.8 to 16.8 | 5.0 to 18.0 | 1.0 to 5.0 |
| P-03 | Silt-Clay | 23-Jun-93 | 5601.9 | 1754.2 | 120.90 | 123.63 | 19.5 | 8 | 2 | 9.0 to 19.0 | 7.3 to 19.5 | 2.0 to 9.3 |
| P-05A | Silt-Clay | 13-Oct-05 | 3612.4 | 2875.1 | 138.60 | 140.74 | 20.0 | 3.5 | 1 | 9.7 to 19.5 | 7.5 to 20.0 | 0.5 to 7.5 |
| P-06A | Silt-Clay | 13-Oct-05 | 3363.7 | 2566.2 | 129.30 | 131.58 | 20.0 | 3.5 | 1 | 9.7 to 19.5 | 7.5 to 20.0 | 0.5 to 7.5 |
| P-07A | Silt-Clay | 3-Feb-12 | 3804.2 | 2168.8 | 145.70 | 147.90 | 31.0 | 10 | 2 | 16.0 to 26.0 | 14.0 to 26.5 | 2.0 to 14.0 |
| GT10-1 | Silt-Clay | 10-Sep-10 | 3444.2 | 3211.7 | 143.80 | 145.56 | 66.5 | 5.9 | 2 | 15.0 to 25.0 | 13.0 to 30.0 | 2.0 to 13.0/ 30.0 to 65.0 |
| GT10-11 | Silt-Clay | 9-Sep-10 | 2518.1 | 1781.3 | 149.30 | 150.08 | 61.0 | 5.9 | 2 | 15.0 to 25.0 | 13.0 to 30.0 | 2.0 to 13.0 / 30.0 to 60.0 |
| GT10-12 | Silt-Clay | 14-Sep-10 | 1736.5 | 1971.4 | 150.60 | 152.41 | 55.0 | 5.9 | 2 | 15.0 to 25.0 | 13.0 to 30.0 | 2.0 to 13.0/ 30.0 to 65.0 |
| SA-BH-1 | Silt-Clay | 24-Aug-10 | 716.6 | 3175.5 | 152.80 | 155.21 | 23.0 | 10 | 2 | 12.0 to 22.0 | 10.0 to 23.0 | 2.0 to 10.0 |
| SA-BH-3 | Silt-Clay | 24-Aug-10 | 813.1 | 1679.7 | 152.80 | 155.07 | 26.5 | 10 | 2 | 12.0 to 22.0 | 10.0 to 23.5 | 2.0 to 10/ 23.5 to 25.0 |
| SA-BH-5 | Silt-Clay | 23-Aug-10 | 1773.0 | 586.9 | 148.60 | 151.01 | 28.5 | 10 | 2 | 18.0 to 28.0 | 15.5 to 28.5 | 2.0 to 15.5 |
| SA-BH-6 | Silt-Clay | 29-Sep-10 | 2895.0 | 597.7 | 123.80 | 125.93 | 25.0 | 10 | 2 | 14.0 to 24.0 | 12.0 to 25.0 | 2.0 to 12.0 |
| ***Decommissioned Monitoring Wells and Piezometers*** | | | | | | | | | | | | |
| MW-7A[b] | Silt-Clay | 26-May-93 | 4359.8 | 3103.9 | 146.70 | 149.56 | 32.5 | 8 | 2 | 16.0 to 26.0 | 13.0 to 27.0 | 2.5 to 13.0 |
| MW-7B[b] | Sand-Gravel | 17-Jun-93 | 4369.0 | 3105.4 | 146.50 | 149.34 | 82.6 | 8 | 2 | 49.0 to 59.0 | 47.2 to 60.0 | 2.0 to 47.2 |
| MW-11A[c] | Silt-Clay | 21-Oct-93 | 5340.9 | 3362.8 | 143.10 | 146.33 | 29.0 | 8 | 2 | 16.3 to 25.8 | 13.0 to 27.0 | 2.0 to 13.0 |
| MW-11B[c] | Sand-Gravel | 2-Nov-93 | 5330.6 | 3357.7 | 143.10 | 146.25 | 73.8 | 10 | 2 | 41.3 to 50.8 | 38.1 to 51.7 | 2.0 to 38.1 |
| MW-13A[d] | Silt-Clay | 17-Oct-96 | 4341.2 | 2093.9 | 146.60 | 149.66 | 44.0 | 10 | 2 | 33.7 to 43.2 | 31.5 to 44.0 | 2.0 to 31.5 |
| MW-13B[d] | Sand-Gravel | 17-Oct-96 | 4348.6 | 2089.7 | 146.50 | 149.45 | 65.5 | 10 | 2 | 55.2 to 64.7 | 52.1 to 65.5 | 2.0 to 52.1 |
| P-04A[e] | Silt-Clay | 28-Oct-93 | 4067.0 | 2530.1 | 139.00 | 141.15 | 32.5 | 8 | 2 | 19.3 to 28.8 | 15.9 to 29.8 | 2.0 to 15.9 |
| P-04B[e] | Sand-Gravel | 10-Nov-93 | 4078.5 | 2531.9 | 139.00 | 141.65 | 75.8 | 10 | 2 | 42.3 to 51.8 | 39.0 to 52.4 | 2.0 to 39.0 |

NOTE:

NA = not available; TOC = top of casing; ft-msl = feet mean sea level; ft-bgs = feet below ground surface.

[a] All monitoring wells and piezometers were re-surveyed in July 2013.

[b] MW-7A and MW-7B were decommissioned in June 2009 to accommodate construction of landfill Module 8D.

[c] MW-11A and MW-11B were decommissioned in May 2012 to accommodate construction of landfill Module 8A.

[d] MW-13A and MW-13B were decommissioned in May 2001 to accommodate construction of the leachate pond.

[e] P-04A and P-04B were decommissioned in June 2013 to accommodate construction of the mechanically stabilized earthen (MSE) berm.

# Table 3-2
# Statistical Summary for Parameters Collected from Leachate and Downgradient Groundwater from Silt-Clay (Shallow) Water-Bearing Zone
# Riverbend Landfill

| Parameter | Leachate Detection Frequency % | Leachate Maximum Concentration[a] (mg/L) | Downgradient Groundwater Prediction Limit[b] (Silt-Clay WBZ) (mg/L) | Contrasting Criteria[c] |
|---|---|---|---|---|
| ***Group 1b: Laboratory Indicators Parameters*** | | | | |
| TOC | 100 | 2,510 | 5.8 | **Yes** |
| TDS | 100 | 11,600 | 608 | **Yes** |
| ***Group 2a: Anions*** | | | | |
| Ammonia | 100 | 2,370 | 0.3 | **Yes** |
| Bicarbonate | 100 | 6,360 | 379 | **Yes** |
| Chloride | 100 | 2,300 | 110 | **Yes** |
| Nitrate-Nitrite as N[d] | 28.6 | 1.9 | 2.4 | N/A |
| Silicon, Total | 100 | 63.5 | 40.0 | No |
| Sulfate | 71.4 | 1,200 | 202 | No |
| ***Group 2a: Cations (dissolved)*** | | | | |
| Calcium | 100 | 399 | 68 | No |
| Iron | 100 | 32.3 | 1.9 | **Yes** |
| Magnesium | 100 | 530 | 30 | **Yes** |
| Manganese | 100 | 12.5 | 4.9 | No |
| Potassium | 100 | 580 | 3.3 | **Yes** |
| Sodium | 100 | 1,900 | 83.0 | **Yes** |
| ***Group 2b: Trace Metals (total)*** | | | | |
| Antimony | 80 | 0.071 | 0.013 | No |
| Arsenic | 100 | 0.32 | 0.081 | No |
| Barium | 100 | 1.4 | 0.75 | No |
| Beryllium[d] | 11.5 | 0.0009 | 0.003 | N/A |
| Cadmium[d] | 11.5 | 0.067 | 0.001 | N/A |
| Chromium | 100 | 0.240 | 0.027 | No |
| Cobalt | 92.3 | 0.067 | 0.025 | No |
| Copper | 82.6 | 0.14 | 0.06 | No |
| Lead | 53.8 | 0.0150 | 0.0250 | No |
| Nickel | 100 | 0.20 | 0.03 | No |
| Selenium[d] | 46.2 | 0.061 | 0.083 | N/A |
| Silver[d] | 3.8 | 0.0034 | 0.0060 | N/A |
| Thallium[d] | 7.7 | 0.0003 | 0.0800 | N/A |
| Vanadium | 100 | 0.37 | 0.05 | No |
| Zinc | 75 | 3.8 | 0.2 | **Yes** |

a Based on site leachate data collected from the leachate sumps 1/5P, 6/7P, and 8P between 4Q 1997 and 2Q 2006

b Based on the shallow ground water data collected from the following downgradient monitoring wells between Jan 1989 and June 2006: MW-12A, MW-14A, MW-15A, MW-16A, MW-19A, MW-20A, MW-21A.

c Comparison between groundwater statistical prediction limit calculated from pooled downgradient wells shown in note b. and maximum leachate concentrations for each inorganic constituent detected in leachate samples. Sufficient contrast is assumed when the maximum leachate concentration is at least 10 times higher than the groundwater prediction limit based on pooled downgradient data, in order to account for the effects of dilution and attenuation. Use of a dilution attenuation factor (DAF) 10 is considered conservative based on USEPA guidance, which identifies typical DAFs of between 10 and 20 (USEPA, 1996). N/A = not applicable because of low detection frequency in leachate (see note d.)

d Not retained for long-term monitoring because the detection frequency in site leachate samples was less than 50 percent. Parameters with such low detection frequencies in leachate are unlikely to exist in sufficient mass in the leachate-soil-groundwater system to meet the performance standard of early indication of a potential release.

# Table 3-3
# Statistical Summary for Parameters
# Collected from Leachate and Downgradient
# Groundwater from Sand and Gravel (Deep) Water-Bearing Zone
# Riverbend Landfill

| Parameter | Leachate Detection Frequency % | Leachate Maximum Concentration[a] (mg/L) | Downgradient Groundwater Prediction Limit[b] (Sand-Gravel WBZ) (mg/L) | Contrasting Criteria[c] |
|---|---|---|---|---|
| ***Group 1b: Laboratory Indicators Parameters*** | | | | |
| TOC | 100 | 2,510 | 4.1 | **Yes** |
| TDS | 100 | 11,600 | 917 | **Yes** |
| ***Group 2a: Anions*** | | | | |
| Ammonia | 100 | 2,370 | 0.7 | **Yes** |
| Bicarbonate | 100 | 6,360 | 502 | **Yes** |
| Chloride | 100 | 2,300 | 340 | No |
| Nitrate-Nitrite as N[d] | 28.6 | 1.9 | 0.26 | N/A |
| Silicon, Total | 100 | 63.5 | 53.0 | No |
| Sulfate | 71.4 | 1,200 | 25.0 | **Yes** |
| ***Group 2a: Cations (dissolved)*** | | | | |
| Calcium | 100 | 399 | 140 | No |
| Iron | 100 | 32.3 | 8.7 | No |
| Magnesium | 100 | 530 | 42.0 | **Yes** |
| Manganese | 100 | 12.5 | 3.70 | No |
| Potassium | 100 | 580 | 1.2 | **Yes** |
| Sodium | 100 | 1,900 | 80 | **Yes** |
| ***Group 2b: Trace Metals (total)*** | | | | |
| Antimony | 80 | 0.071 | 0.006 | **Yes** |
| Arsenic | 100 | 0.32 | 0.005 | **Yes** |
| Barium | 100 | 1.4 | 0.10 | **Yes** |
| Beryllium[d] | 11.5 | 0.0009 | 0.0010 | N/A |
| Cadmium[d] | 11.5 | 0.067 | 0.0005 | N/A |
| Chromium | 100 | 0.240 | 0.044 | No |
| Cobalt | 92.3 | 0.067 | 0.023 | No |
| Copper | 82.6 | 0.140 | 0.028 | No |
| Lead | 53.8 | 0.0150 | 0.0090 | No |
| Nickel | 100 | 0.20 | 0.015 | **Yes** |
| Selenium | 46.2 | 0.061 | 0.006 | N/A |
| Silver[d] | 3.8 | 0.0034 | 0.0030 | N/A |
| Thallium[d] | 7.7 | 0.0003 | 0.0031 | N/A |
| Vanadium | 100 | 0.37 | 0.05 | No |
| Zinc | 75 | 3.80 | 0.18 | **Yes** |

a Based on site leachate data collected from the leachate sumps 1/5P, 6/7P, and 8P between 4Q 1997 and 2Q 2006

b Based on the deep ground water data collected from the following downgradient monitoring wells between Jan 1989 and June 2006: MW-12B, MW-14B, MW-15B, MW-16B, MW-20B, MW-21B. Outliers were excluded from calculations.

c Comparison between groundwater statistical prediction limit calculated from pooled downgradient wells shown in note b. and maximum leachate concentrations for each inorganic constituent detected in leachate samples. Sufficient contrast is assumed when the maximum leachate concentration is at least 10 times higher than the groundwater prediction limit based on pooled downgradient data, in order to account for the effects of dilution and attenuation. Use of a dilution attenuation factor (DAF) 10 is considered conservative based on USEPA guidance, which identifies typical DAFs of between 10 and 20 (USEPA, 1996). N/A = not applicable because of low detection frequency in leachate (see note d.)

d Not retained for long-term monitoring because the detection frequency in site leachate samples was less than 50 percent. Parameters with such low detection frequencies in leachate are unlikely to exist in sufficient mass in the leachate-soil-groundwater system to meet the performance standard of early indication of a potential release.

# Table 3-4
# Groundwater Monitoring
# Schedule and Analytical Parameters
# Riverbend Landfill

| Parameter | Laboratory Analytical Method[i] | Annual and Semiannual Monitoring[a, b, c] | | | Five-Year[b, c, d] Comprehensive Monitoring Parameters |
|---|---|---|---|---|---|
| | | Statistical Parameters[e] | | Supplemental[h] Parameters | |
| | | Silt-Clay WBZ[f] (Shallow "A" Wells) | Sand-Gravel WBZ[g] (Deep "B" Wells) | | |
| ***Group 1a: Field Indicators*** | | | | | |
| Specific Conductance | --- | --- | --- | X | X |
| Dissolved Oxygen | --- | --- | --- | X | X |
| pH | --- | --- | --- | X | X |
| ORP | --- | --- | --- | X | X |
| Temperature | --- | --- | --- | X | X |
| ***Group 1b: Laboratory Indicators*** | | | | | |
| TOC | 9060 | X | X | --- | X |
| TDS | 160.1 or 2540C | X | X | --- | X |
| TSS | 160.2 or 2540D | --- | --- | --- | X |
| ***Group 2a: Anions*** | | | | | |
| Ammonia | 350.1 | --- | --- | X | X |
| Bicarbonate | 310.2 or 2320B | X | X | --- | X |
| Chloride | 9251 or 300.0 | X | --- | X | X |
| Nitrate+Nitrite | 353.2 or 300.0 | --- | --- | X | X |
| Silicon | 370.1 or 6010B | --- | --- | --- | X |
| Sulfate | 9038 or 300.0 | --- | X | X | X |
| ***Group 2a: Cations (dissolved)*** | | | | | |
| Calcium | 6010B or 6020 | --- | --- | X | X |
| Iron | 6010B or 6020 | --- | --- | X | X |
| Magnesium | 6010B or 6020 | X | X | --- | X |
| Manganese | 6010B or 6020 | --- | --- | X | X |
| Potassium | 6010B or 6020 | X | X | --- | X |
| Sodium | 6010B or 6020 | X | X | --- | X |
| ***Group 2b: Trace Metals (total)***[j] | | | | | |
| Antimony | 6010B or 6020 | --- | --- | --- | X |
| Arsenic | 6010B or 6020 | --- | --- | --- | X |
| Barium | 6010B or 6020 | --- | --- | --- | X |
| Beryllium | 6010B or 6020 | --- | --- | --- | X |
| Cadmium | 6010B or 6020 | --- | --- | --- | X |
| Chromium | 6010B or 6020 | --- | --- | --- | X |
| Cobalt | 6010B or 6020 | --- | --- | --- | X |
| Copper | 6010B or 6020 | --- | --- | --- | X |
| Lead | 6010B or 6020 | --- | --- | --- | X |
| Nickel | 6010B or 6020 | --- | --- | --- | X |
| Selenium | 6010B or 6020 | --- | --- | --- | X |
| Silver | 6010B or 6020 | --- | --- | --- | X |
| Thallium | 6010B or 6020 | --- | --- | --- | X |
| Vanadium | 6010B or 6020 | --- | --- | --- | X |
| Zinc | 6010B or 6020 | --- | --- | --- | X |

# Table 3-4
# Groundwater Monitoring
# Schedule and Analytical Parameters
# Riverbend Landfill

| Parameter | Laboratory Analytical Method[i] | Annual and Semiannual Monitoring[a, b, c] | | | Five-Year[b, c, d] Comprehensive Monitoring Parameters |
|---|---|---|---|---|---|
| | | Statistical Parameters[e] | | | |
| | | Silt-Clay WBZ[f] (Shallow "A" Wells) | Sand-Gravel WBZ[g] (Deep "B" Wells) | Supplemental[h] Parameters | |
| ***Group 3: VOCs***[k] | | | | | |
| VOCs | 8260B/8011/524.2 | --- | --- | X[l] | X |

NOTE:

--- = not applicable; WBZ = water-bearing zone; ORP = oxidation-reduction potential; VOCs = volatile organic compounds.

a Semiannual monitoring events are performed in the second quarter (spring) between April 1 and May 31 and in fourth quarter (fall) between October 1 and November 30. Annual monitoring events are performed in the second quarter (spring) between April 1 and May 31.

b Obtain field duplicate sample once per day or once every 10 samples whichever is most frequent.

c Obtain field blank sample once per day or once every 10 samples whichever is most frequent.

d Five-year comprehensive monitoring to be performed in the Spring 2018. Groundwater samples will be collected from compliance wells MW-12A/B, MW-14A/B, MW-15A/B, MW-16A/B, and MW-21A/B; detection wells MW-19A, MW-20A, and MW-20B; and upgradient wells MW-1A/B, MW-2, MW-10A/B, MW-17A, and MW-18A/B.

e Statistical limits were established using methods described in Section 11.3.1.

f Includes the following compliance and detection monitoring wells: MW-12A, MW-14A, MW-15A, MW-16A, MW-19A, MW-20A, and MW-21A. Detection monitoring well MW-22A and piezometers P-05A, P-06A, and P-07A will be sampled annually in the second quarter (spring) event.

g Includes the following compliance monitoring wells: MW-12B, MW-14B, MW-15B, MW-16B, and MW-21B. Detection monitoring well MW-20B will be sampled annually in the second quarter (spring) event.

h Data will be evaluated using methods described in Sections 11.3.2 and 11.4.

i In many instances, there are equivalent methods for the same analyte published by different authorities on method development; e.g. the EPA Office of Water, EPA Office of Solid Waste, Standard Methods, and ASTM. Analytical methods provided in this EMP may be substituted provided that the alternate methods are approved for use by the DEQ, provide technically defensible data, and are appropriate for the media being tested. The use of alternative approved methods is considered an acceptable deviation from the prescribed methods in this EMP and should not be considered a violation of the requirements of the EMP.

j Obtain both unfiltered and filtered samples for Group 2b Trace Metals. If TSS is > or = to 100 mg/L also analyze filtered samples for dissolved trace metals.

k All VOCs must include a library search to identify any unknown compounds.

l Detection monitoring well MW-5A will be sampled for VOCs semiannually in the second quarter (spring) and fourth quarter (fall) events, and detection monitoring well MW-5B will be sampled annually in the second quarter (spring) event. Piezometers P-05A, P-06A, and P-07A will not be sampled for VOCs.

# Table 4-1
# Primary Leachate and Secondary Collection Systems
# Monitoring Schedule and Parameters
# Riverbend Landfill

| Parameter | Laboratory Analytical Method[d] | Annual and Semiannual Monitoring[a, b, c] | |
|---|---|---|---|
| | | Semiannual Leachate Pond and LPS | Annual LCRS and LSCS Sumps[e] |
| ***Group 1a: Field Indicators***[f] | --- | X | X |
| ***Group 1b: Laboratory Indicators*** | | | |
| Total Alkalinity | 2320B | X | X |
| Total Hardness (as $CaCO_3$) | 2340C | X | X |
| Laboratory pH | 9040B | X | X |
| Specific Conductance | 9050A | X | X |
| Chemical Oxygen Demand | 9060 or 410.4 | X | X |
| Total Kjeldahl Nitrogen | 351.2 | X | --- |
| Total Organic Carbon | 9060 | X | X |
| Total Dissolved Solids | 160.1 or 2540C | X | X |
| Total Suspended Solids | 160.2 or 2540D | X | X |
| ***Group 2a: Anions*** | | | |
| Ammonia | 350.1 | X | X |
| Bicarbonate | 310.2 or 2320B | X | X |
| Carbonate | 310.2 or 2320B | X | X |
| Chloride | 300.0 or 9251 | X | X |
| Nitrate+Nitrite | 300.0 or 353.2 | X | X |
| Silicon | 370.1 or 6010B | X | X |
| Sulfate | 300.0 or 9038 | X | X |
| ***Group 2a: Cations*** | | | |
| Calcium | 6010B or 6020 | X | X |
| Iron | 6010B or 6020 | X | X |
| Magnesium | 6010B or 6020 | X | X |
| Manganese | 6010B or 6020 | X | X |
| Potassium | 6010B or 6020 | X | X |
| Sodium | 6010B or 6020 | X | X |
| ***Group 2b: Trace Metals (total)***[g] | 6010B or 6020 | X | X |
| ***Group 3: Volatile Organic Compounds (VOCs)***[h] | | | |
| VOCs | 8260B/8011/524.2 | X | X |

NOTE:

LPS = leachate pond secondary; LCRS = leachate collection and removal system; LSCS = leachate secondary collection system;

--- = not applicable.

a Semiannual monitoring events are performed in the second quarter (spring) between April 1 and May 31 and in fourth quarter (fall) between October 1 and November 30. Annual monitoring events are performed in the second quarter (spring) between April 1 and May 31.

b Obtain field duplicate sample once per day or once every 10 samples whichever is most frequent.

c Obtain field blank sample once per day or once every 10 samples whichever is most frequent.

d In many instances, there are equivalent methods for the same analyte published by different authorities on method development; e.g. the EPA Office of Water, EPA Office of Solid Waste, Standard Methods, and ASTM. Analytical methods provided in this EMP may be substituted provided that the alternate methods are approved for use by the DEQ, provide technically defensible data, and are appropriate for the media being tested. The use of alternative approved methods is considered an acceptable deviation from the prescribed methods in this EMP and should not be considered a violation of the requirements of the EMP.

e Sump monitoring locations include: 1/5 P, 4/5 S, 6/7 P, 6/7 S, 8 P, and 8S.

f Field indicators include: pH, temperature, specific conductance, dissolved oxygen, and oxidation-reduction potential.

g Group 2b trace metals include: antimony, arsenic, barium, beryllium, cadmium, chromium, cobalt, copper, lead, nickel, selenium, silver, thallium, vanadium, and zinc.

h All VOCs include a library search to identify any unknown compounds.

# Table 5-1
# Surface Water Monitoring Schedule and Parameters
# Riverbend Landfill

| Parameter | Laboratory Analytical Method[a] | Annual Monitoring | |
|---|---|---|---|
| | | SYR SW-1 (Upstream) | SYR SW-2 (Downstream) |
| ***Group 1a: Field Indicators***[b] | --- | X | X |
| ***Group 1b: Laboratory and Supplemental Indicators*** | | | |
| Total Alkalinity | 2320B | X | X |
| Total Hardness ( as $CaCO_3$) | 2340C | X | X |
| Laboratory pH | 9040B | X | X |
| Specific Conductance | 9050A | X | X |
| Chemical Oxygen Demand | 9060 or 410.4 | X | X |
| Biological Oxygen Demand | 5210B | X | X |
| Fecal Coliform | 9223B | X | X |
| *E. coli* | 9223B | X | X |
| Total Kjeldahl Nitrogen | 351.2 | X | X |
| Total Organic Halogens | 9020B | X | X |
| Total Phosphorus | 365.1 | X | X |
| Orthophosphate | 365.1 | X | X |
| Total Organic Carbon | 9060 | X | X |
| Total Dissolved Solids | 160.1 or 2540C | X | X |
| Total Suspended Solids | 160.2 or 2450D | X | X |
| ***Group 2a: Anions*** | | | |
| Ammonia | 350.1 | X | X |
| Bicarbonate | 310.2 or 2320B | X | X |
| Carbonate | 310.2 or 2320B | X | X |
| Chloride | 300.0 or 9251 | X | X |
| Nitrate+Nitrite | 300.0 or 353.2 | X | X |
| Silicon | 370.1 or 6010B | X | X |
| Sulfate | 300.0 or 9038 | X | X |
| ***Group 2a: Cations*** | | | |
| Calcium, Total | 6010B or 6020 | X | X |
| Iron, Total | 6010B or 6020 | X | X |
| Magnesium, Total | 6010B or 6020 | X | X |
| Manganese, Total | 6010B or 6020 | X | X |
| Potassium, total | 6010B or 6020 | X | X |
| Sodium, Total | 6010B or 6020 | X | X |
| ***Group 3: Volatile Organic Compounds (VOCs)***[c] | | | |
| VOCs | 8260B/8011/524.2 | X | X |

NOTE:

SYR = South Yamhill River; --- = not applicable; X = parameter analyzed.

[a] In many instances, there are equivalent methods for the same analyte published by different authorities on method development; e.g. the EPA Office of Water, EPA Office of Solid Waste, Standard Methods, and ASTM. Analytical methods provided in this EMP may be substituted provided that the alternate methods are approved for use by the DEQ, provide technically defensible data, and are appropriate for the media being tested. The use of alternative approved methods is considered an acceptable deviation from the prescribed methods in this EMP and should not be considered a violation of the requirements of the EMP.

[b] Field indicators include: pH, temperature, specific conductance, dissolved oxygen, and oxidation-reduction potential.

[c] All VOCs include a library search to identify any unknown compounds.

# Table 11-1
# Statistical and Prescriptive Concentration Limits (PSCLs, ALs, and SSLs) for Compliance Monitoring Wells
# Riverbend Landfill

| | PSCL | AL | SSLs | | | | | | | |
|---|---|---|---|---|---|---|---|---|---|---|
| Monitoring Well | Vinyl Chloride[a] (mg/L) | VOCs[b] | Bicarbonate Alkalinity (mg/L) | Chloride (mg/L) | Magnesium Dissolved (mg/L) | Potassium Dissolved (mg/L) | Sodium Dissolved (mg/L) | Sulfate (mg/L) | Total Dissolved Solids (mg/L) | Total Organic Carbon (mg/L) |
| MW-12A | 0.002 | (see Note 1) | 81.3 | 63.4 | 11.5 | 1.20 | 21.8 | --- | 240 | 3.2 |
| MW-12B | 0.002 | (see Note 1) | 291 | --- | 38.8 | 1.27 | 67.8 | 6.8 | 1,020 | 1.9 |
| MW-14A | 0.002 | (see Note 1) | 148 | 33.4 | 16.5 | 0.85 | 15.6 | --- | 282 | 3.1 |
| MW-14B | 0.002 | (see Note 1) | 230 | --- | 16.1 | 0.85 | 43.0 | 16.8 | 329 | 3.2 |
| MW-15A | 0.002 | (see Note 1) | 135 | 19.5 | 12.7 | 1.00 | 29.5 | --- | 349 | 2.2 |
| MW-15B | 0.002 | (see Note 1) | 372 | --- | 36.3 | 0.68 | 42.2 | 10.7 | 543 | 2.1 |
| MW-16A | 0.002 | (see Note 1) | 460 | 14.8 | 32.0 | 0.88 | 59.6 | --- | 505 | 5.2 |
| MW-16B | 0.002 | (see Note 1) | 388 | --- | 44.2 | 0.93 | 81.6 | 8.6 | 771 | 2.8 |
| MW-21A | 0.002 | (see Note 1) | 211 | 16.0 | 19.9 | 0.91 | 60.9 | --- | 446 | 4.7 |
| MW-21B | 0.002 | (see Note 1) | 325 | --- | 26.4 | 1.40 | 46.6 | 21.7 | 372 | 5.9 |

NOTE:

mg/L = milligrams per liter; --- = not applicable; VOCs = volatile organic compounds; not applicable.

Note 1: Detection of a VOC above the laboratory derived practical quantitation limit (PQL).

PSCL: Permit-Specific Concentration Limit; exceedance of a single PSCL not previously reported and explained to the DEQ will trigger verification resampling. Verification of a PSCL exceedance would require follow-up actions, consistent with Section 11.5.3 of this Environmental Monitoring Plan (EMP).

AL: Action Limit; exceedance of a single AL not previously reported and explained to the DEQ will trigger verification resampling. Verification of an AL exceedance would require follow-up actions, consistent with Section 11.5.3 of this EMP.

SSL: Site-Specific Limit (statistically-derived); exceedance of three or more SSLs in a single compliance monitoring well during a monitoring event not previously reported and explained to the DEQ will trigger verification resampling. Verification of three or more SSL exceedances would require follow-up actions consistent with Section 11.5.3 of this EMP.

[a] PSCL for vinyl chloride in all compliance wells established at the numerical groundwater quality reference level (NGWQRL) of 0.002 mg/L (specified in Table 2 of the Oregon Administrative Rule [OAR] 340-40).

[b] VOCs by U.S. Environmental Protection Agency (EPA) Method 8260B and 8011 except for vinyl chloride which was defined as a PSCL.

# FIGURES

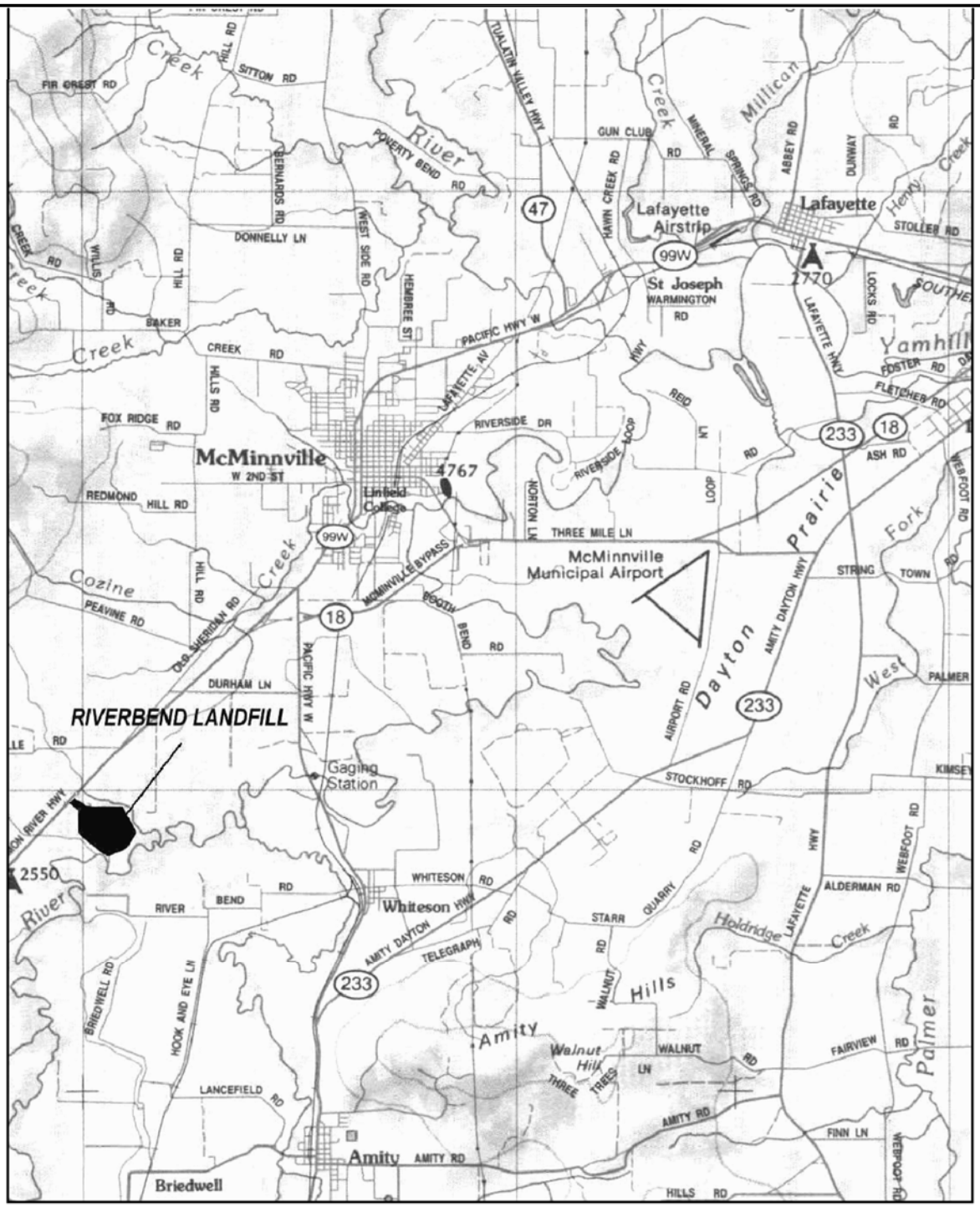


| | | | | |
|---|---|---|---|---|
| SCS ENGINEERS<br>Environmental Consultants and Contractors<br>14945 SW Sequoia Parkway, Suite 180<br>Portland, Oregon 97224<br>(503) 639-9201 FAX: (503) 684-6948 | PROJECT NO.<br>04208022.14 | DES BY<br>D.L. | SITE LOCATION MAP<br>ENVIRONMENTAL MONITORING PLAN<br>RIVERBEND LANDFILL<br>McMINNVILLE, OREGON | DATE<br>DECEMBER 2014 |
| | SCALE<br>AS SHOWN | CHK BY<br>D.L. | | FIGURE<br>1-1 |
| | CAD FILE<br>FIGURE 1-1 | APP BY<br>L.C. | | |

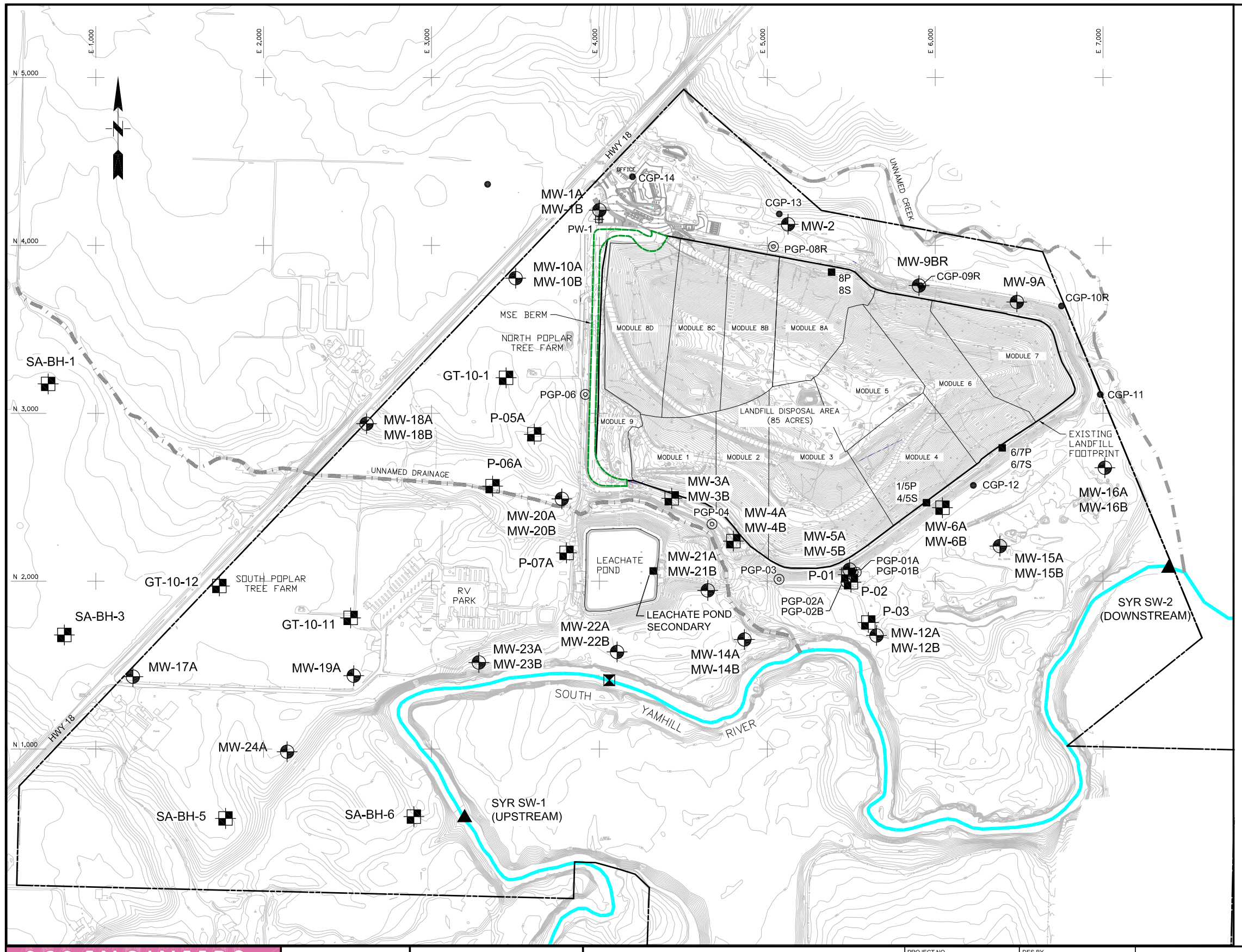


LEGEND:

- Topographic Contours (Surveyed)
- Topographic Contours (USGS)
- Property Boundary
- Flow Line - Yamhill River
- Flow Line - Tributary Stream
- MW-19A — Groundwater Monitoring Well
- P-05A — Piezometer
- MB-2 — On-Site Water Well
- South Yamhill River Gauging Station
- CGP-11 — Compliance Landfill Gas Monitoring Probe
- PGP-06 — Performance Evaluation Landfill Gas Monitoring Probe
- 6/7P 6/7S — LCRS and LSCS Monitoring Location
- SYR SW-1 — South Yamhill River Sampling Location (Approximate)

SOURCE:

1) Existing contours based on aerial topography provided by Miller Creek Aerial Mapping, date of photograph March 22, 2014. Contours are based on NAVD 88.

2) Horizontal Datum: Assumed
Iron pipe at scale house = N4000.000 E4000.000
Iron pipe at maintenance building = N2825.685 E4000.000

NOTES:

1) Monitoring wells and piezometers with "A" designation are screened in the shallow (Silt-Clay) water-bearing zone, and monitoring wells and piezometers with "B" designation are screened in the deeper (Sand-Gravel) water-bearing zone.

2) Piezometers with "GT" and "SA-BH" designations are screened in the shallow (Silt-Clay) water-bearing zone.

3) Leachate Collection and Removal System (LCRS) monitoring locations are identified by a "P" designation and Leachate Secondary Containment System (LSCS) monitoring locations are identified with a "S" designation.

4) Phase IA of the mechanically stabilized earthen (MSE) berm (approximate southern half) is completed. Phase IB of the MSE berm (approximate northern half) is currently under construction.

SCS ENGINEERS
Environmental Consultants and Contractors
14945 SW Sequoia Parkway, Suite 180
Portland, Oregon 97224
(503) 639-9201 FAX: (503) 684-6948

WASTE MANAGEMENT

0 600 1200
SCALE IN FEET

| | |
|---|---|
| PROJECT NO. 04208022.14 | DES BY D.L. |
| SCALE AS SHOWN | CHK BY D.L. |
| CAD FILE FIGURE 1-2 | APP BY L.C. |

SITE PLAN AND MONITORING LOCATIONS
ENVIRONMENTAL MONITORING PLAN
RIVERBEND LANDFILL
McMINNVILLE, OREGON

DATE DECEMBER 2014
FIGURE 1-2

# APPENDIX A

## Groundwater Monitoring Wells and Piezometers: Exploratory Logs and Construction Details

# Monitoring Wells

# LOG OF EXPLORATORY BORING

PROJECT NAME **Riverbend Landfill**
LOCATION **McMinnville, Oregon**
DRILLED BY **Geo-Tech**
DRILL METHOD **H/S AUGER**
LOGGED BY **G. Kelty**

BORING NO. **MW- 1A**
PAGE **1 OF 4**
GROUND ELEV.
TOTAL DEPTH **61.50'**
DATE COMPLETED **09/06/89**

| SAMPLE NUMBER | RECOVERY (ft./ft.) | BLOW COUNTS (N COMP) | LITHOLOGIC DESCRIPTION |
|---|---|---|---|
| | | | 0-5' SILTY CLAY (CL), black (5Y, 2.5/1); 90% fines, low to medium plasticity; 10% fine sand; common wood chips; damp. |
| #1 | 1.5/1.5 | 3-4-6 (10) | 5-10.1' SILTY CLAY (CL), grayish brown (2.5Y, 5/2); 100% fines, low to medium plasticity, slightly silty; trace fine sand; stiff; damp. |
| #2 | 1.5/1.5 | 2-2-4 (6) | 10.1-15' CLAYEY SILT (ML), dark grayish brown (10YR, 4/2); 100% fines, low to medium plasticity; trace fine sand, common quartz or mica (identification difficult due to size); minor rootlets; rapid dilatency; firm; damp. |
| #3 | 1.5/1.5 | 2-2-4 (6) | 15-26' SILTY CLAY (CL) AND CLAYEY SILT (ML) INTERBEDDED, dark grayish brown (10YR, 4/2); 10% fine sand; firm.<br>Silty Clay: 90% fines, low to medium plasticity; slow dilatency.<br>Clayey Silt: 90% fines, slight to low plasticity; rapid dilatency; damp to wet. |

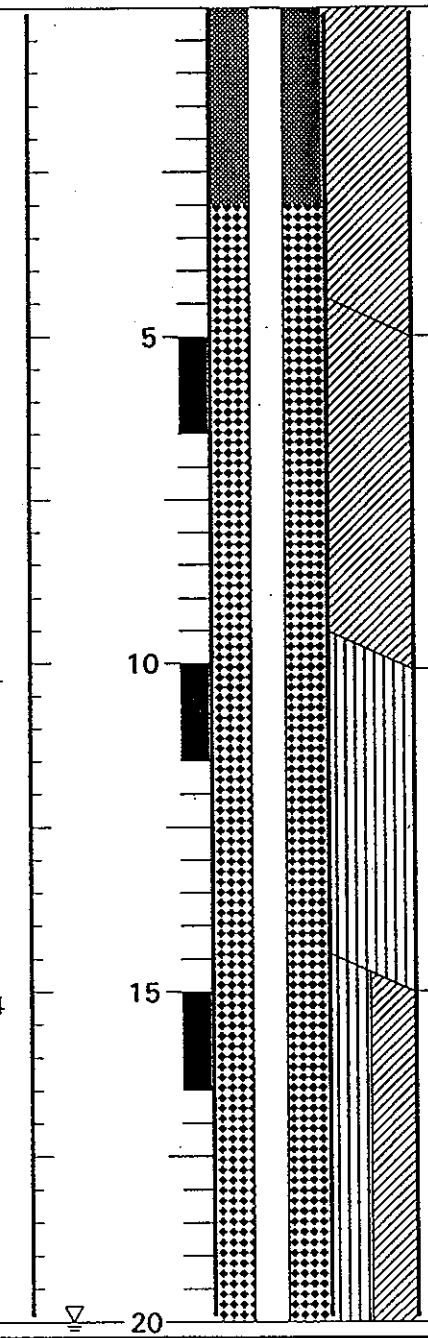


## REMARKS

Drilled by 10-inch O.D. continuous flight, hollow stem auger. Samples collected with 1 1/2-inch O.D. split spoon sampler. Borehole converted to a 2-inch monitoring well.

# LOG OF EXPLORATORY BORING

PROJECT NAME **Riverbend Landfill**
LOCATION **McMinnville, Oregon**
DRILLED BY **Geo-Tech**
DRILL METHOD **H/S AUGER**
LOGGED BY **G. Kelty**

BORING NO. **MW- 1A**
PAGE **2 OF 4**
GROUND ELEV.
TOTAL DEPTH **61.50'**
DATE COMPLETED **09/06/89**

| SAMPLE NUMBER | RECOVERY (ft./ft.) | BLOW COUNTS (N COMP) | LITHOLOGIC DESCRIPTION |
|---|---|---|---|
| #4 | 1.5/1.5 | 1-2-4 (6) | @20 ft: increasing silty content. |
| #5 | 1.5/1.5 | 2-3-3 (6) | 26-35' SILTY CLAY (CL), dark gray (5Y, 4/1); 100% fines, low to medium plasticity; trace fine sand; slow dilatency; firm; damp to wet. |
| #6 | 1.5/1.5 | 1-2-3 (5) | 26-35' SILTY CLAY (CL), continued from previous page. |
| #7 | 1.5/1.5 | 5-9-10 (19) | 35-40' SILTY CLAY (CL), dark gray (5Y, 3/2); 100% fines; low to medium plasticity; trace fine sand; common quartz or mica; common hard clay nodules; very stiff; damp. |

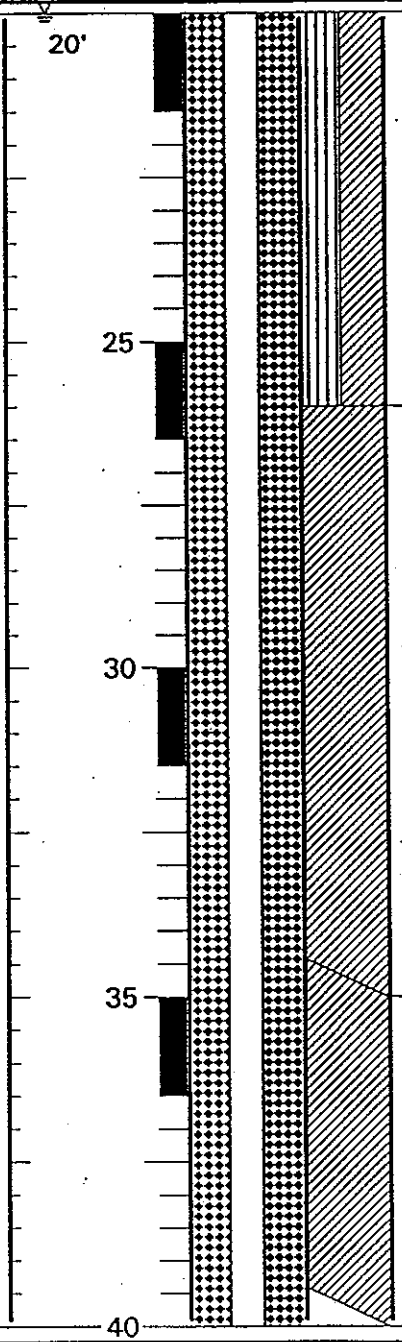


## REMARKS

Drilled by 10-inch O.D. continuous flight, hollow stem auger. Samples collected with 1 1/2-inch O.D. split spoon sampler. Borehole converted to a 2-inch monitoring well.

# LOG OF EXPLORATORY BORING

PROJECT NAME Riverbend Landfill
LOCATION McMinnville, Oregon
DRILLED BY Geo-Tech
DRILL METHOD H/S AUGER
LOGGED BY G. Kelty

BORING NO. MW- 1A
PAGE 3 OF 4
GROUND ELEV.
TOTAL DEPTH 61.50'
DATE COMPLETED 09/06/89

| SAMPLE NUMBER | RECOVERY (ft./ft.) | BLOW COUNTS (N COMP) | GROUND WATER LEVELS | DEPTH IN FEET | SAMPLES | WELL DETAILS | LITHOLOGIC COLUMN | LITHOLOGIC DESCRIPTION |
|---|---|---|---|---|---|---|---|---|
| #8 | 1.5/1.5 | 4-4-6 (10) | | | | | | 40-45' CLAY (CL), dark gray (5Y, 4/1); 100% fines, low to medium plasticity; trace fine sand; common iron oxide staining; common white altered feldspar; stiff; damp. |
| #9 | 1.5/1.5 | 6-8-11 (19) | | 45 | | | | 45-50' SILTY CLAY (CL), olive gray (5Y, 5/2); 100% fines, low to medium plasticity; trace fine sand; common iron staining; common organic material; very stiff; damp. |
| #10 | 0.8/1.5 | 45-50-0 (50) | | 50 | | | | 50-55' CLAYEY SANDY GRAVEL (GC), dark grayish brown ( 10YR, 4/2); 15% fines, low to medium plasticity; 35% fine sand; 50% fine to coarse gravel; common iron oxide staining; very dense; damp. |
| #11 | 1.5/1.5 | 5-35-50 (85) | | 55 | | | | 55-55.5' CLAYEY SAND (SC), olive (5Y, 4/4); 40% fines low to medium plasticity, slightly silty; 60% fine sand; occasional fine gravel; dense; wet.<br>55.5-56' SANDY CLAY (CL), pale olive (5Y, 6/3); 60% fines, low to medium plasticity, slightly silty; 40% fine sand; common altered feldspar; dense; damp.<br>56-60' CLAYEY SANDY GRAVEL (GC), dark grayish brown (10YR, 4/2); 15% fines, low to medium |
| | | | | 60 | | | | |

REMARKS

Drilled by 10-inch O.D. continuous flight, hollow stem auger. Samples collected with 1 1/2-inch O.D. split spoon sampler. Borehole converted to a 2-inch monitoring well.

# LOG OF EXPLORATORY BORING

PROJECT NAME Riverbend Landfill
LOCATION McMinnville, Oregon
DRILLED BY Geo-Tech
DRILL METHOD H/S AUGER
LOGGED BY G. Kelty

BORING NO. MW- 1A
PAGE 4 OF 4
GROUND ELEV.
TOTAL DEPTH 61.50'
DATE COMPLETED 09/06/89

| SAMPLE NUMBER | RECOVERY (ft./ft.) | BLOW COUNTS (N COMP) | GROUND WATER LEVELS | DEPTH IN FEET | SAMPLES | WELL DETAILS | LITHOLOGIC COLUMN | LITHOLOGIC DESCRIPTION |
|---|---|---|---|---|---|---|---|---|
| #12 | 1.5/1.5 | 12-14-16 (30) | | 65 | | | | plasticity; 35% fine sand; 50% fine to coarse gravel; common iron oxide staining; very dense; damp to wet.<br>60-61.5' CLAY (CL), dark gray (2.5Y, N/4); 100% fines, low to medium plasticity; trace fine sand; common hard gray blue clay nodules; very stiff; damp.<br>BOTTOM OF BORING AT 61.5 FEET. |
| | | | | 70 | | | | |
| | | | | 75 | | | | |
| | | | | 80 | | | | |

## REMARKS

Drilled by 10-inch O.D. continuous flight, hollow stem auger. Samples collected with 1 1/2-inch O.D. split spoon sampler. Borehole converted to a 2-inch monitoring well.

# LOG OF EXPLORATORY BORING

PROJECT NAME Riverbend Landfill
LOCATION McMinnville, Oregon
DRILLED BY Geo-Tech
DRILL METHOD H/S AUGER
LOGGED BY G. Kelty

BORING NO. MW- 1B
PAGE 1 OF 2
GROUND ELEV.
TOTAL DEPTH 26.50'
DATE COMPLETED 09/08/89

| SAMPLE NUMBER | RECOVERY (ft./ft.) | BLOW COUNTS (N COMP) | LITHOLOGIC DESCRIPTION |
|---|---|---|---|
| | | | 0-5' SILTY CLAY (CL), black (5Y, 2.5/1); 90% fines, low to medium plasticity; 10% fine sand; common wood chips; damp. |
| #1 | 0.8/1.5 | 3-5-9 (14) | 5-10.1' SILTY CLAY (CL), grayish brown (2.5Y, 5/2); 100% fines, low to medium plasticity, slightly silty; trace fine sand; stiff; damp. |
| #2 | 1.5/1.5 | 2-3-4 (7) | 10.1-15' CLAYEY SILT (ML), dark grayish brown (10YR, 4/2); 100% fines, low to medium plasticity; trace fine sand, common quartz or mica (identification difficult due to size); minor rootlets; rapid dilatency; firm; damp. |
| #3 | 1.5/1.5 | 1-2-2 (4) | 15-26' SILTY CLAY (CL) AND CLAYEY SILT (ML) INTERBEDDED, dark grayish brown (10YR, 4/2); 10% fine sand; firm.<br>Silty Clay: 90% fines, low to medium plasticity; slow dilatency.<br>Clayey Silt: 90% fines, slight to low plasticity; rapid dilatency; damp to wet. |

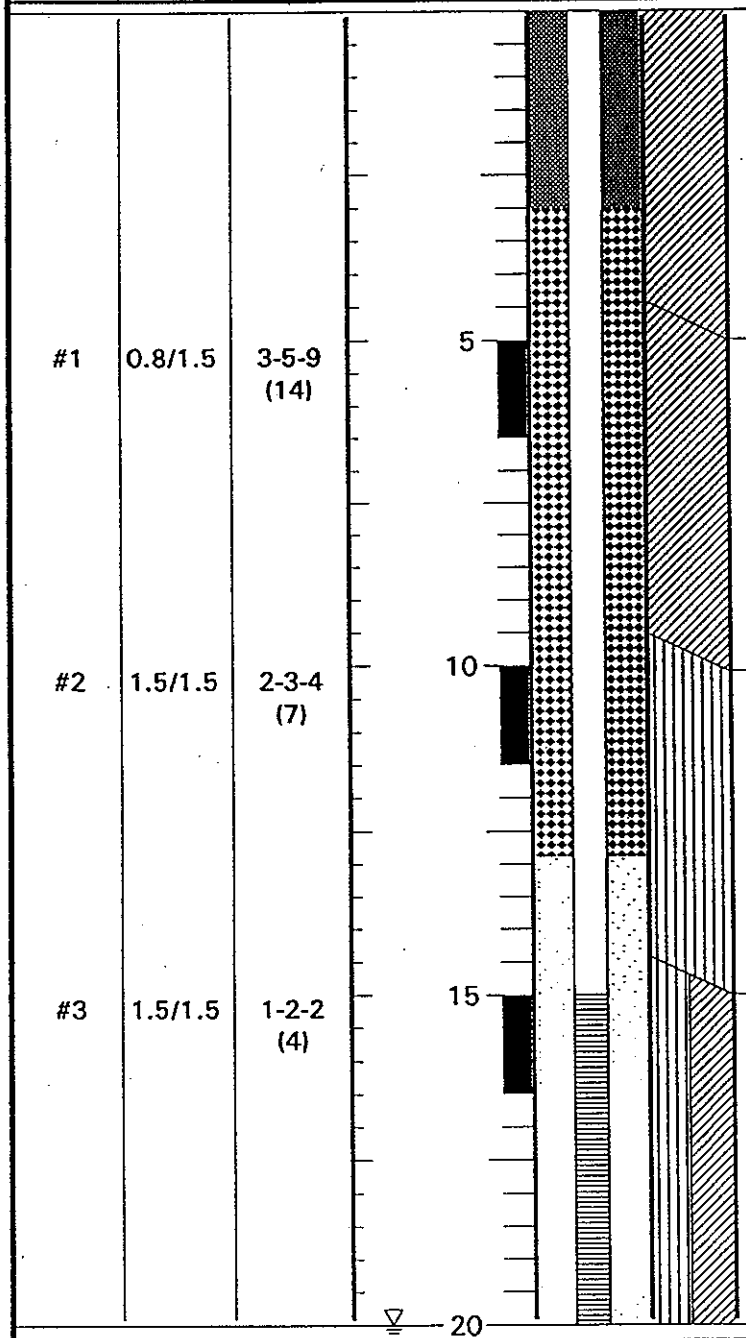


## REMARKS

Drilled by 10-inch O.D. continuous flight, hollow stem auger. Samples colected with 1 1/2-inch O.D. split spoon sampler. Borehole converted to a 2-inch monitoring well.

# LOG OF EXPLORATORY BORING

PROJECT NAME **Riverbend Landfill**
LOCATION **McMinnville, Oregon**
DRILLED BY **Geo-Tech**
DRILL METHOD **H/S AUGER**
LOGGED BY **G. Kelty**

BORING NO. **MW- 1B**
PAGE **2 OF 2**
GROUND ELEV.
TOTAL DEPTH **26.50'**
DATE COMPLETED **09/08/89**

| SAMPLE NUMBER | RECOVERY (ft./ft.) | BLOW COUNTS (N COMP) | GROUND WATER LEVELS | DEPTH IN FEET | SAMPLES | WELL DETAILS | LITHOLOGIC COLUMN | LITHOLOGIC DESCRIPTION |
|---|---|---|---|---|---|---|---|---|
| #4 | 1.5/1.5 | 2-3-5 (8) | ▽ 20' | | | | | @20 ft: increasing silty content. |
| #5 | 1.5/1.5 | 2-5-10 (15) | | 25 | | | | 26-26.5' SILTY CLAY (CL), dark gray (5Y, 4/1); 100% fines, low to medium plasticity; trace fine sand; slow dilatency; firm; damp to wet. |
| | | | | | | | | BOTTOM OF BORING AT 26.5 FEET. |
| | | | | 30 | | | | |
| | | | | 35 | | | | |
| | | | | 40 | | | | |

## REMARKS

Drilled by 10-inch O.D. continuous flight, hollow stem auger. Samples colected with 1 1/2-inch O.D. split spoon sampler. Borehole converted to a 2-inch monitoring well.

Sweet, Edwards & Associates, Inc.

MW-2

BORING LOG (AH-4)

Project YAMHILL SOLID WASTE
Client
Feature
Location
Depth to Water
Date 1/26/81

Sheet 1 of 2
Drilled By Sweet-Edwards
Logged By D.A. CHANELL
Date Logged 1/26/81
Surf Elev.
Total Depth 40.0'

| WELL DETAIL | UNIFIED CLASS | DEPTH (ft) | ELEVATION (ft) | SAMPLE RECORD: Sample No | Blows per 6 inches | Recovery w/in 0.1 ft | Sample Type | DESCRIPTION |
|---|---|---|---|---|---|---|---|---|
| | ML | 5, 10 | | | | | | NOTE This hole is adjacent to Test Pit #7, see log for TP-7 for materials description from 0.0-10.0'<br><br>10.0'-26.0' SANDY CLAYEY SILT & CLAYEY SILT - uniformly medium brown, mica flakes visible, slightly sticky & stiff, some open tubes & voids. |
| | | 15 | | 1 | | | | |
| | | 20 | | 2 | | | | |
| | CL | 25 | | 3 | | | | 26.0-40.0 SANDY SILTY CLAY AND SILTY CLAY - grey-blue, compact, moderately sticky and stiff, locally sandy. |
| | | 30 | | 4 | | | | |

REMARKS: All samples pushed

Sweet, Edwards & Associates, Inc.

MW-2
BORING LOG (AH-4)

Project _____ Sheet 2 of 2
Client _____ Drilled By _____
Feature _____ Logged By _____
Location _____ Date Logged _____
Depth to Water _____ Surf Elev. _____
Date _____ Total Depth _____

| WELL DETAIL | UNIFIED CLASS | DEPTH (ft) | ELEVATION (ft) | SAMPLE RECORD: Sample No | Blows per 6 inches | Recovery w/o 0.1 ft. | Sample Type | DESCRIPTION |
|---|---|---|---|---|---|---|---|---|
| | | 35 | | | | | | NOTE: Increased drilling resistance below 30.0' |
| | | 40 | | S | | 100% | SS | B.O.H. 40' |

REMARKS:

# LOG OF EXPLORATORY BORING

| | | | |
|---|---|---|---|
| PROJECT NAME | Riverbend Landfill | BORING NO. | MW- 5A |
| LOCATION | McMinnville, Oregon | PAGE | 1 OF 2 |
| DRILLED BY | GeoTech Explorations | GROUND ELEV. | |
| DRILL METHOD | Hollow Stem Auger | TOTAL DEPTH | 28.00' |
| LOGGED BY | Brian Kier | DATE COMPLETED | 09/08/92 |

| SAMPLE NUMBER SAMPLE TYPE | RECOVERY PERCENT | BLOW COUNTS (N COMP) | GROUND WATER LEVELS | DEPTH IN FEET | SAMPLES | WELL DETAILS | LITHOLOGIC COLUMN | LITHOLOGIC DESCRIPTION |
|---|---|---|---|---|---|---|---|---|
| | | | | | | | | **0-5 feet: SILTY CLAY,** brown, moist, stiff, medium plasticity, some organic matter. (ALLUVIUM) |
| MW-8-5 SS | 67% | 4-6-8 (14) | | 5 | | | | **5-6 feet: SILTY CLAY,** dark gray, moist, stiff, medium plasticity, some organic matter. (ALLUVIUM) |
| MW-8-10 SS | 78% | 3-4-8 (12) | | 10 | | | | **10-11.1 feet: SILTY CLAY,** brown with gray mottling, moist, stiff, medium plasticity. (ALLUVIUM) |
| MW-8-15 SS | 94% | 4-7-10 (17) | | 15 | | | | **15-16.4 feet: SILTY CLAY,** brown with gray and reddish mottling, moist, stiff, medium plasticity. (ALLUVIUM) |
| | | | | 20 | | | | |

## REMARKS

Drilled with continuous sampling barrel. Well constructed as shown with 2-inch PVC with 0.010-inch slots. Well casing protected with 6.5' high locking steel protective casing and three 3 foot high steel posts in

# LOG OF EXPLORATORY BORING

PROJECT NAME **Riverbend Landfill**
LOCATION **McMinnville, Oregon**
DRILLED BY **GeoTech Explorations**
DRILL METHOD **Hollow Stem Auger**
LOGGED BY **Brian Kier**

BORING NO. MW- 5A
PAGE 2 OF 2
GROUND ELEV.
TOTAL DEPTH 28.00'
DATE COMPLETED 09/08/92

| SAMPLE NUMBER SAMPLE TYPE | RECOVERY PERCENT | BLOW COUNTS (N COMP) | GROUND WATER LEVELS | DEPTH IN FEET | SAMPLES | WELL DETAILS | LITHOLOGIC COLUMN | LITHOLOGIC DESCRIPTION |
|---|---|---|---|---|---|---|---|---|
| MW-8-20 SS | 100% | 3-6-8 (14) | | | | | | 20-21.5 feet: SILTY CLAY, brown with gray and reddish mottling, moist, stiff, medium plasticity. (ALLUVIUM) |
| | | | 24.2' (Static) | | | | | |
| MW-8-25 SS | 100% | 3-4-5 (9) | | 25 | | | | 25-28 feet: SILTY CLAY, brown with gray and reddish mottling, moist, stiff, medium plasticity, some water in pore spaces. (ALLUVIUM) |
| | | | | | | | | Bottom of boring at 28.0 feet below ground surface. |
| | | | | 30 | | | | |
| | | | | 35 | | | | |
| | | | | 40 | | | | |

## REMARKS

Drilled with continuous sampling barrel. Well constructed as shown with 2-inch PVC with 0.010-inch slots. Well casing protected with 6.5' high locking steel protective casing and three 3 foot high steel posts in

# WELL DETAILS

EMCON

PROJECT NUMBER 0258-001.18
PROJECT NAME Phase I Preliminary Assessment
LOCATION Riverbend Landfill
WELL PERMIT NO. NA

BORING / WELL NO. MW - 5A
TOP OF CASING ELEV. 138.75
GROUND SURFACE ELEV. 132.29
DATUM Mean Sea Level
INSTALLATION DATE 9-8-92

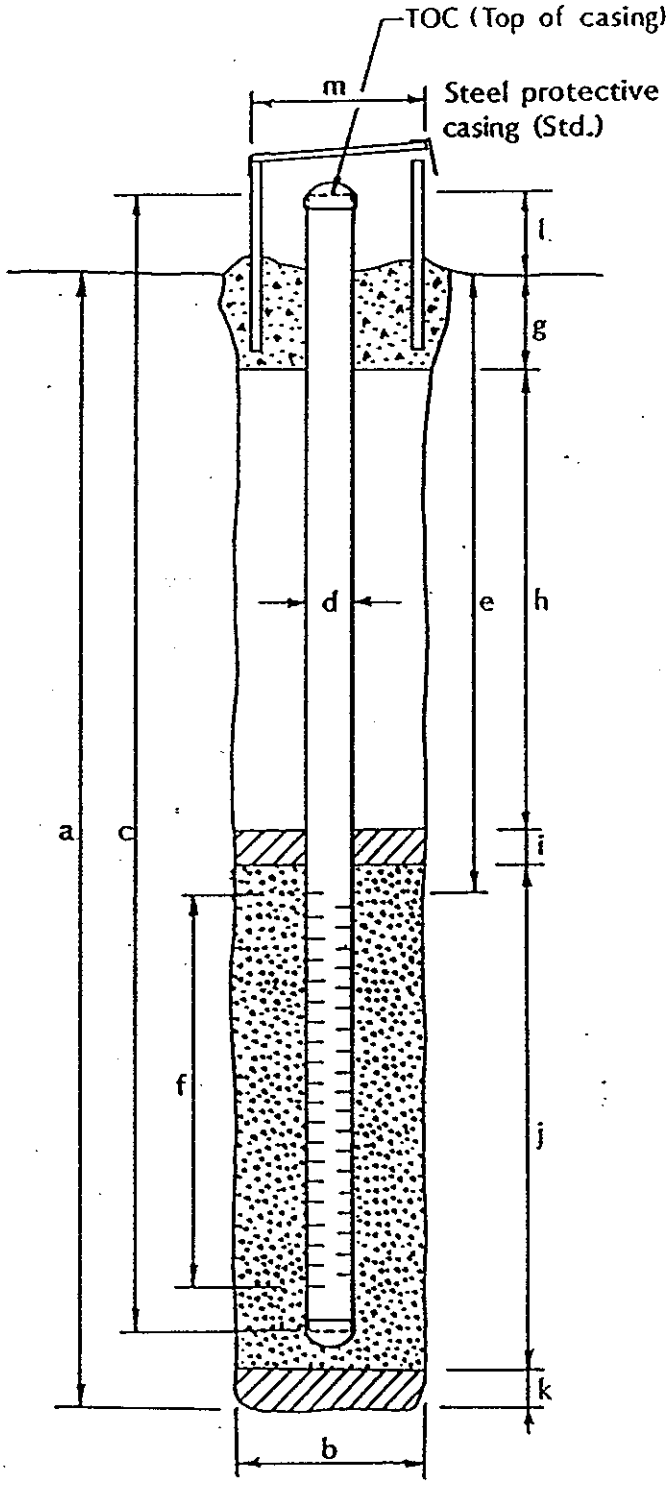


## EXPLORATORY BORING

a. Total depth 28 ft.
b. Diameter 10.25 in.
Drilling method Hollow Stem Auger

## WELL CONSTRUCTION

c. Total casing length 34.46 ft.
Material Schedule 40 PVC
d. Diameter 2 in.
e. Depth to top perforations 18 ft.
f. Perforated length 10 ft.
Perforated interval from 18 to 28 ft.
Perforation type Machine Slotted
Perforation size 0.010-Inch
g. Surface seal 2 ft.
Seal material Concrete
h. Backfill 0 ft.
Backfill material NA
i. Seal 14 ft.
Seal material Bentonite Chips
j. Gravel pack 12 ft.
Pack material 10 x 20 Gradation Sand
k. Bottom seal 0 ft.
Seal material N.A
l. Casing stickup 6.46 ft.
m. Protective casing diameter 6 in.

NA = Not Applicable

Prepared by: _____

Reviewed by: _____ Date: _____

# LOG OF EXPLORATORY BORING

| | | | |
|---|---|---|---|
| PROJECT NAME | Riverbend Landfill | BORING NO. | MW- 5B |
| LOCATION | McMinnville, Oregon | PAGE | 1 OF 3 |
| DRILLED BY | GeoTech Explorations | GROUND ELEV. | |
| DRILL METHOD | Hollow Stem Auger | TOTAL DEPTH | 44.70' |
| LOGGED BY | Brian Kier | DATE COMPLETED | 09/03/92 |

| SAMPLE NUMBER SAMPLE TYPE | RECOVERY PERCENT | BLOW COUNTS (N COMP) | GROUND WATER LEVELS | DEPTH IN FEET | SAMPLES | WELL DETAILS | LITHOLOGIC COLUMN | LITHOLOGIC DESCRIPTION |
|---|---|---|---|---|---|---|---|---|

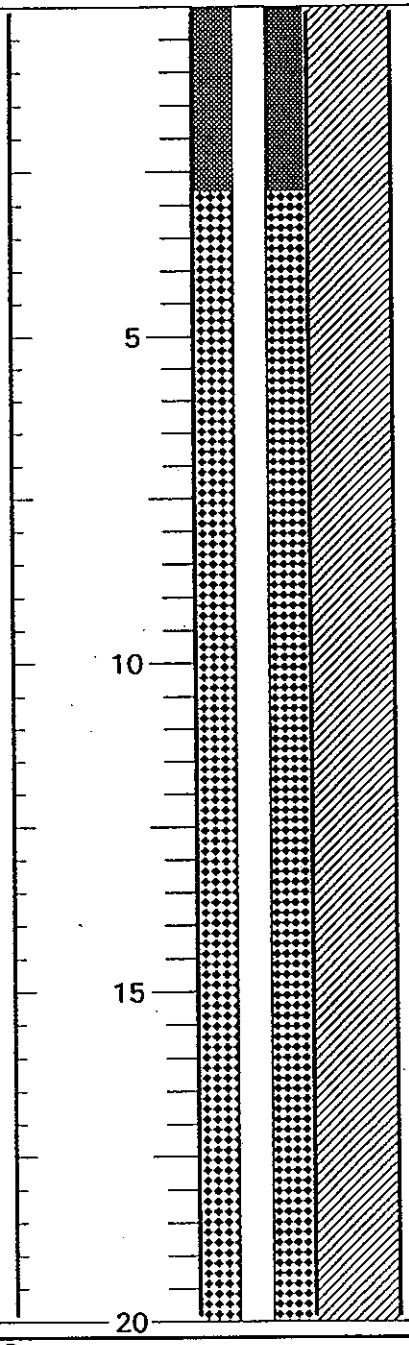


0-20 feet: SILTY CLAY, brown, moist, stiff, low to medium plasticity. (ALLUVIUM)

@ 5-6 feet: Dark gray, moist.

@ 6-13.8 feet: Brown with gray and reddish mottling, medium plasticity.

@ 13.8-14 feet: Dark gray.

@ 14-20 feet: Brown with gray and reddish mottling, trace organic debris.

## REMARKS

Drilled with continuous sampling barrel. Well constructed as shown with 2-inch PVC with 0.010-inch slots. Well casing protected with 6.4' high locking steel protective casing and three 3 foot high steel posts in

# LOG OF EXPLORATORY BORING

PROJECT NAME Riverbend Landfill
LOCATION McMinnville, Oregon
DRILLED BY GeoTech Explorations
DRILL METHOD Hollow Stem Auger
LOGGED BY Brian Kier

BORING NO. MW- 5B
PAGE 2 OF 3
GROUND ELEV.
TOTAL DEPTH 44.70'
DATE COMPLETED 09/03/92

| SAMPLE NUMBER SAMPLE TYPE | RECOVERY PERCENT | BLOW COUNTS (N COMP) | GROUND WATER LEVELS | DEPTH IN FEET | SAMPLES | WELL DETAILS | LITHOLOGIC COLUMN | LITHOLOGIC DESCRIPTION |
|---|---|---|---|---|---|---|---|---|

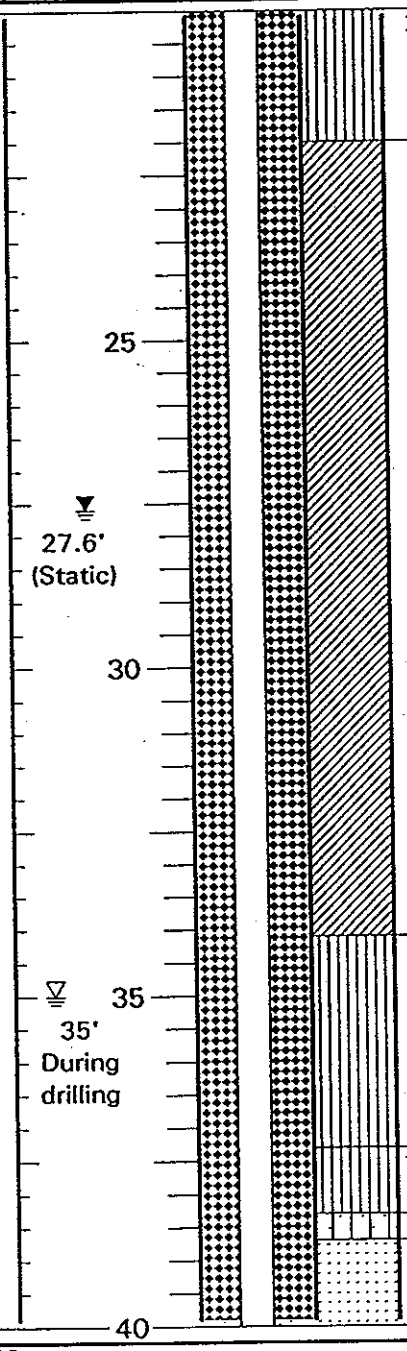


20-22 feet: CLAYEY SILT, brown with gray and reddish mottling, moist, low plasticity, stiff. (ALLUVIUM)

22-34.1 feet: SILTY CLAY, brown with gray and reddish mottling, moist, stiff, medium plasticity, trace plant rootlets, some water in pore spaces. (ALLUVIUM)

@ 31.8-34.1 feet: Gray.

34.1-37.3 feet: CLAYEY SILT, gray, moist, stiff, trace plant rootlets. (ALLUVIUM)
@ 34.5 feet: Moist to wet.

37.3-38.3 feet: SANDY SILT, gray, fine-grained sand, wet. (ALLUVIUM)

38.3-38.7 feet: SILTY SAND, gray, fine-grained, wet. (ALLUVIUM)

38.7-40.5 feet: GRAVELLY SAND, gray, fine- to

REMARKS

Drilled with continuous sampling barrel. Well constructed as shown with 2-inch PVC with 0.010-inch slots. Well casing protected with 6.4' high locking steel protective casing and three 3 foot high steel posts in

# LOG OF EXPLORATORY BORING

| | | | |
|---|---|---|---|
| PROJECT NAME | **Riverbend Landfill** | BORING NO. | MW- 5B |
| LOCATION | **McMinnville, Oregon** | PAGE | 3 OF 3 |
| DRILLED BY | **GeoTech Explorations** | GROUND ELEV. | |
| DRILL METHOD | **Hollow Stem Auger** | TOTAL DEPTH | 44.70' |
| LOGGED BY | **Brian Kier** | DATE COMPLETED | 09/03/92 |

| SAMPLE NUMBER SAMPLE TYPE | RECOVERY PERCENT | BLOW COUNTS (N COMP) | GROUND WATER LEVELS | DEPTH IN FEET | SAMPLES | WELL DETAILS | LITHOLOGIC COLUMN | LITHOLOGIC DESCRIPTION |
|---|---|---|---|---|---|---|---|---|

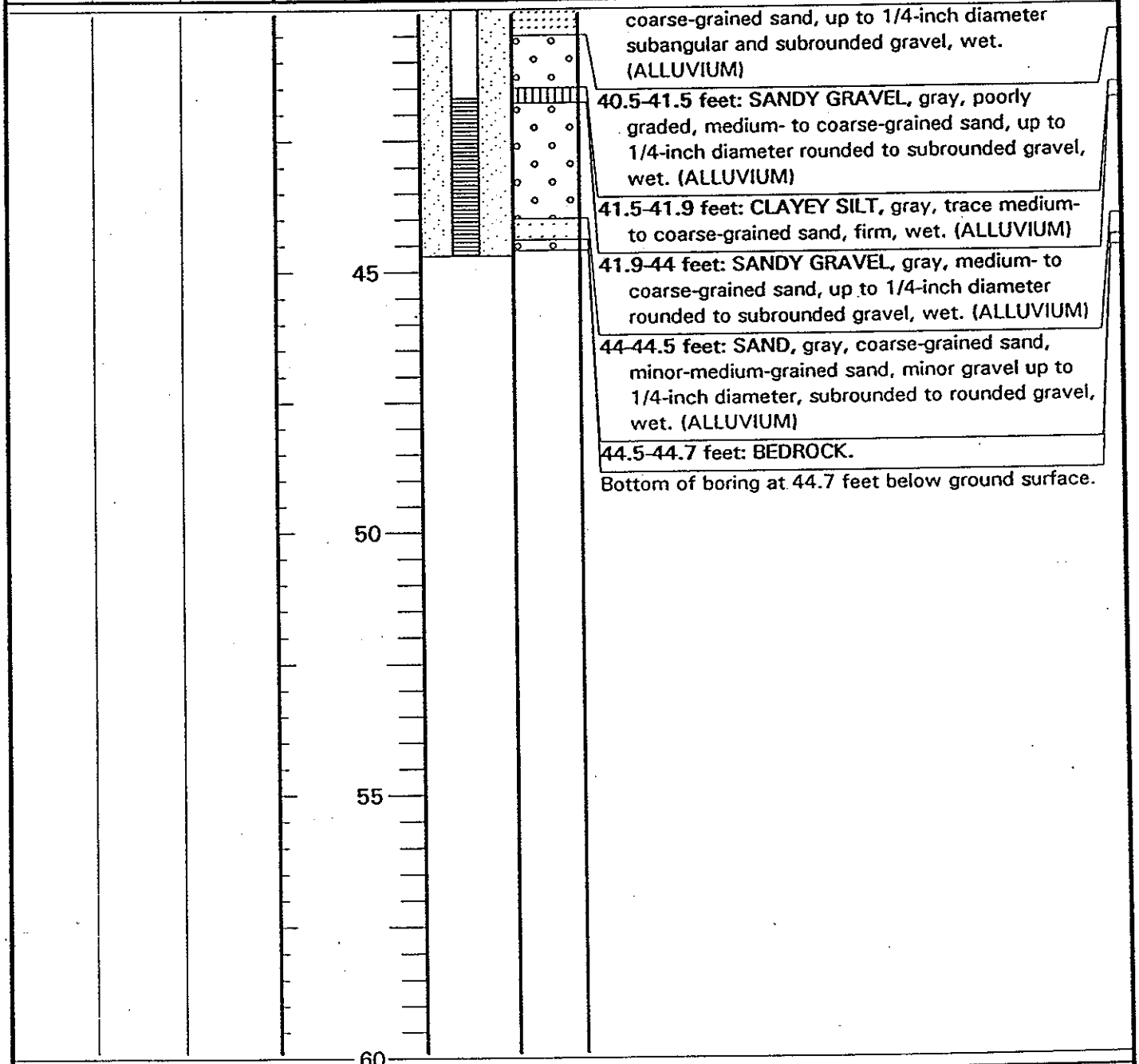


coarse-grained sand, up to 1/4-inch diameter subangular and subrounded gravel, wet. (ALLUVIUM)

40.5-41.5 feet: SANDY GRAVEL, gray, poorly graded, medium- to coarse-grained sand, up to 1/4-inch diameter rounded to subrounded gravel, wet. (ALLUVIUM)

41.5-41.9 feet: CLAYEY SILT, gray, trace medium- to coarse-grained sand, firm, wet. (ALLUVIUM)

41.9-44 feet: SANDY GRAVEL, gray, medium- to coarse-grained sand, up to 1/4-inch diameter rounded to subrounded gravel, wet. (ALLUVIUM)

44-44.5 feet: SAND, gray, coarse-grained sand, minor-medium-grained sand, minor gravel up to 1/4-inch diameter, subrounded to rounded gravel, wet. (ALLUVIUM)

44.5-44.7 feet: BEDROCK.

Bottom of boring at 44.7 feet below ground surface.

## REMARKS

Drilled with continuous sampling barrel. Well constructed as shown with 2-inch PVC with 0.010-inch slots. Well casing protected with 6.4' high locking steel protective casing and three 3 foot high steel posts in

# WELL DETAILS

EMCON

PROJECT NUMBER 0258-001.18
PROJECT NAME Phase I Preliminary Assessment
LOCATION Riverbend Landfill
WELL PERMIT NO. NA

BORING / WELL NO. MW - 5B
TOP OF CASING ELEV. 138.90
GROUND SURFACE ELEV. 132.49
DATUM Mean Sea Level
INSTALLATION DATE 9-3-92

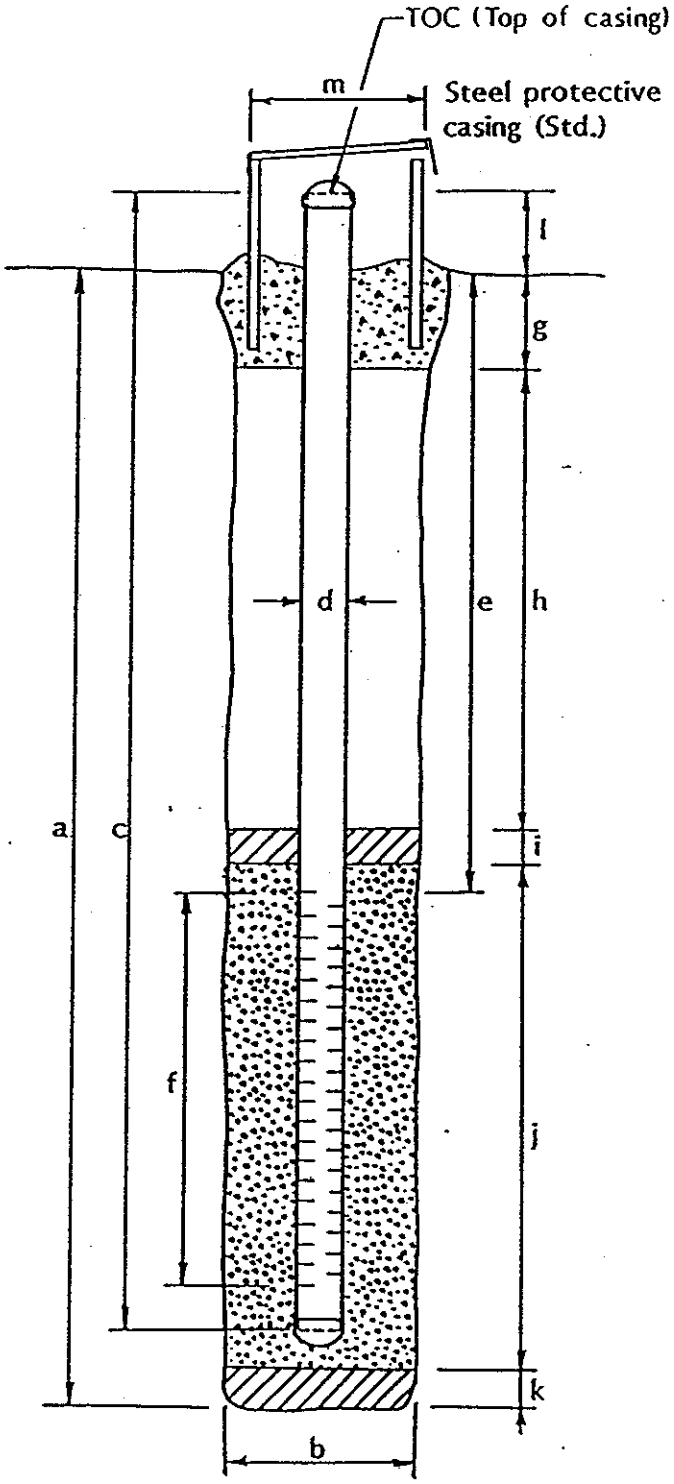


## EXPLORATORY BORING

a. Total depth 44.7 ft.
b. Diameter 10.25 in.
Drilling method Hollow Stem Auger

## WELL CONSTRUCTION

c. Total casing length 51.11 ft.
Material Schedule 40 PVC
d. Diameter 2 in.
e. Depth to top perforations 41.7 ft.
f. Perforated length 3.0 ft.
Perforated interval from 41.7 to 44.7 ft.
Perforation type Machine Slotted
Perforation size 0.010-Inch
g. Surface seal 2.8 ft.
Seal material Concrete
h. Backfill 0 ft.
Backfill material NA
i. Seal 37.1 ft.
Seal material Bentonite Chips
j. Gravel pack 4.8 ft.
Pack material 10 x 20 Gradation Sand
k. Bottom seal 0 ft.
Seal material NA
l. Casing stickup 6.41 ft.
m. Protective casing diameter 6 in.

NA = Not Applicable

Prepared by: _____

Reviewed by: _____ Date: _____

Form F-11 Rev. 12/90

# LOG OF EXPLORATORY BORING

| | | | |
|---|---|---|---|
| PROJECT NAME | Additional Hydrogeologic Investigation | BORING NO. | MW-9A |
| LOCATION | Riverbend Landfill; McMinnville, Oregon | PAGE | 1 OF 2 |
| DRILLED BY | Geo-Tech Explorations, Inc. | GROUND ELEV. | 125.80' |
| DRILL METHOD | Hollow Stem Auger | TOTAL DEPTH | 24.50' |
| LOGGED BY | Craig D. Fanshier | DATE COMPLETED | 10/21/93 |

| RECOVERY PERCENT | POCKET PENETRO-METER (Tons/SF) | PENETRATION (Blows/Ft) | GROUND WATER LEVELS | DEPTH IN FEET | SAMPLES | LITHOLOGIC COLUMN | WELL DETAILS | LITHOLOGIC DESCRIPTION |
|---|---|---|---|---|---|---|---|---|
| 100 | 4.5 | | | | | | | **0 to 24.5 feet: SILTY CLAY (CL)**, dark brown (7.5 YR 3/2), with approximately 20 percent gray mottling (0 to 13.0 feet); medium to high plasticity fines; stiff to very stiff, damp. |
| | 4.0 | | | | | | | Note: soil is generally tight 0 to 24.0 feet. |
| | 3.5 | | | | | | | @ 0 to 8.0 feet: some small macro pores, 2 to 5 per square inch. |
| 100 | 2.5 | | | 5 | | | | @ 3.0 to 9.0 feet: rust red mottling (approximately 40 percent). |
| | 2.0 | | ▼ 1/5/94 | | | | | @ 3.0 to 16.0 feet: mostly high plasticity fines. |
| | 2.0 | | | | | | | @ 5.0 to 24.0 feet: several larger diameter (1/8 to 1/2-inch) macro pores. |
| | 1.78 | | | | | | | |
| | 1.5 | | | | | | | @ 7.5 feet: moist. |
| 100 | 2.0 | | | 10 | | | | |
| | 1.75 | | | | | | | |
| | 1.75 | | | | | | | |
| | 1.0 | | | | | | | @ 13.0 feet: color change to very dark gray (5Y 3/1) with approximately 20 percent reddish brown mottling. |
| 100 | 2.5 | | | 15 | | | | |
| | 2.0 | | ▽ 10/21/93 | | | | | @ 16.0 feet: soil ped surfaces have glazed, smooth, glistening surfaces; wet. |
| | 2.0 | | | | | | | |
| | 2.0 | | | | | | | |
| | 1.5 | | | | | | | |
| | | | | 20 | | | | |

## REMARKS

Drilled with 8-inch O.D. (4.25-inch I.D.) Hollow Stem Auger. Samples continuously collected with 5-foot long, 3-inch I.D. split barrel and 1.5-foot long, 3-inch O.D. split spoon fitted with rings. A 2-inch PVC monitoring well was constructed in the borehole. Well construction information presented in Well Details. See explanation for definition of symbols.

# LOG OF EXPLORATORY BORING

| | | | |
|---|---|---|---|
| PROJECT NAME | Additional Hydrogeologic Investigation | BORING NO. | MW-9A |
| LOCATION | Riverbend Landfill; McMinnville, Oregon | PAGE | 2 OF 2 |
| DRILLED BY | Geo-Tech Explorations, Inc. | GROUND ELEV. | 125.80' |
| DRILL METHOD | Hollow Stem Auger | TOTAL DEPTH | 24.50' |
| LOGGED BY | Craig D. Fanshier | DATE COMPLETED | 10/21/93 |

| RECOVERY PERCENT | POCKET PENETRO-METER (Tons/SF) | PENETRATION (Blows/Ft) | GROUND WATER LEVELS | DEPTH IN FEET | SAMPLES | LITHOLOGIC COLUMN | WELL DETAILS | LITHOLOGIC DESCRIPTION |
|---|---|---|---|---|---|---|---|---|
| | 2.5 | | | | | | | 0 to 24.5 feet: SILTY CLAY (CL), continued. |
| | 1.75 | | | | | | | |
| | 2.0 | | | | | | | |
| | 2.0 | | | | | | | |
| | | | | 25 | | | | BORING TERMINATED AT 24.5 FEET. |
| | | | | 30 | | | | |
| | | | | 35 | | | | |
| | | | | 40 | | | | |

## REMARKS

Drilled with 8-inch O.D. (4.25-inch I.D.) Hollow Stem Auger. Samples continuously collected with 5-foot long, 3-inch I.D. split barrel and 1.5-foot long, 3-inch O.D. split spoon fitted with rings. A 2-inch PVC monitoring well was constructed in the borehole. Well construction information presented in Well Details. See explanation for definition of symbols.

EMCON NORTHWEST

# WELL DETAILS

CLIENT Riverbend Landfill Company, Inc.
PROJECT NUMBER 0258-001.28
PROJECT NAME Additional Hydrogeologic Inv.
LOCATION McMinnville, Oregon
WELL PERMIT NO. 59128

BORING / WELL NO. MW-9A
TOP OF CASING ELEV. 128.42
GROUND SURFACE ELEV. 125.8
DATUM Feet-Mean Sea Level
INSTALLATION DATE 10/21/93

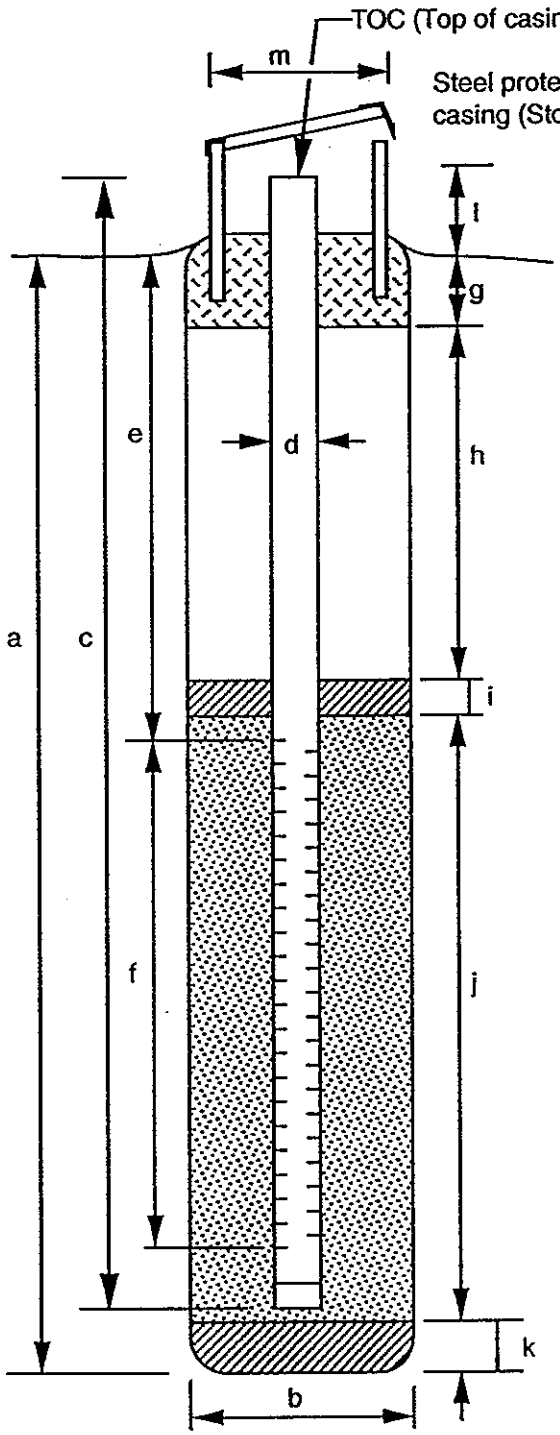


## EXPLORATORY BORING

a. Total depth 24.5 ft.
b. Diameter 8 in.
Drilling method Hollow Stem Auger

## WELL CONSTRUCTION

c. Total casing length (+2.6 to 24.6) 27.2 ft.
Material Schedule 40 PVC
d. Diameter 2 in.
e. Depth to top perforations 14.3 ft.
f. Perforated length 9.5 ft.
Perforated interval from 14.3 to 23.8 ft.
Perforation type Machine Slotted
Perforation size 0.010 Inches
g. Surface seal (0 to 2.0) 2.0 ft.
Material Concrete
h. Backfill N.A. ft.
Material N.A.
i. Seal (2.0 to 11.0) 9.0 ft.
Material Bentonite
j. Gravel pack 13.5 ft.
Gravel pack interval from 11.0 to 24.5 ft.
Material 10-20 Gradation Sand
k. Bottom seal/fill N.A. ft.
Material N.A.
l. Casing stickup 2.6 ft.
m. Protective casing diameter 6.5 in.

Prepared by: Craig Fanshier

Rev. 7/23/91
Ventura Mac 4

# LOG OF EXPLORATORY BORING

| | | | |
|---|---|---|---|
| PROJECT NAME | Riverbend Landfill | BORING NO. | MW-9B(R) |
| LOCATION | McMinnville, Oregon | PAGE | 1 OF 2 |
| DRILLED BY | Geo-Tech Exploration | GROUND ELEV. | 124.80' |
| DRILL METHOD | Hollow Stem Auger w/Split Spoon (SPT) | TOTAL DEPTH | 36.50' |
| LOGGED BY | Craig D. Fanshier | DATE COMPLETED | 08/24/94 |

| SAMPLE NUMBER SAMPLE TYPE | RECOVERY PERCENT | BLOW COUNTS (N COMP) | LITHOLOGIC DESCRIPTION |
|---|---|---|---|
| S-1 | 27 | 2-2-3 (5) | 0 to 20.5 feet: SILTY CLAY (CL), dark brown (7.5YR 3/2); approximately 5 percent small (1 mm diameter) reddish brown mottling; medium plasticity fines; soft; damp. |
| S-2 | 20 | 6-4-9 (13) | @ 8.5 feet: color changes to dark greenish gray (5GY 4/1), with 20 percent reddish brown mottling; stiff. |
| S-3 | 93 | 3-4-7 (11) | @ 13.5 feet: color is all dark greenish gray (5GY 4/1). |
| S-4 | 53 | 3-6-6 (12) | @ 18.5 feet: color changes to dark greenish gray (5G 4/1), blocky soil peds. |

GROUND WATER LEVELS: ▽ 8/31/94

DEPTH IN FEET: 5, 10, 15, 20

SAMPLES

WELL DETAILS

LITHOLOGIC COLUMN

## REMARKS

Drilled with 10-inch O.D. (6.5-inch I.D.) hollow stem auger. Samples collected with either a 1.5-inch or 3-inch I.D. by 1.5-foot-long split spoon. A 2-inch PVC monitoring well was constructed in the borehole. Well construction information presented in well details. See explanation for definition of symbols. MW-9B(R) was installed approximated 50 feet east of MW-9B, which was decommissioned.

# LOG OF EXPLORATORY BORING

| | | | |
|---|---|---|---|
| PROJECT NAME | Riverbend Landfill | BORING NO. | MW-9B(R) |
| LOCATION | McMinnville, Oregon | PAGE | 2 OF 2 |
| DRILLED BY | Geo-Tech Exploration | GROUND ELEV. | 124.80' |
| DRILL METHOD | Hollow Stem Auger w/Split Spoon (SPT) | TOTAL DEPTH | 36.50' |
| LOGGED BY | Craig D. Fanshier | DATE COMPLETED | 08/24/94 |

| SAMPLE NUMBER SAMPLE TYPE | RECOVERY PERCENT | BLOW COUNTS (N COMP) | GROUND WATER LEVELS | DEPTH IN FEET | SAMPLES | WELL DETAILS | LITHOLOGIC COLUMN | LITHOLOGIC DESCRIPTION |
|---|---|---|---|---|---|---|---|---|
| | | | | | | | | 0 to 20.5 feet: SILTY CLAY (CL), continued. |
| | | | | | | | | **20.5 to 28.0 feet: CLAYEY SILT (ML)**, dark greenish gray (5GY 4/1); low to medium plasticity fines; 5 percent brown wood fragments (1 mm to 5 mm); soft; wet. |
| S-5 | 87 | 2-2-3 (5) | ▼ 8/24/94 | 25 | | | | @ 25.0 to 28.5 feet: smooth drilling. |
| S-6 | 100 | 2-3-4 (7) | | | | | | @ 27.5 to 28.5 feet: transitional contact between clayey silt (ML) and silty sand (SM). |
| S-7 | 93 | 2-2-4 (6) | | 30 | | | | **28.0 to 33.5 feet: SILTY SAND (SM)**, dark greenish gray (5GY 4/1); 40 percent non to low plasticity fines; 60 percent fine sand, angular; loose; wet. |
| | | | | | | | | @ 30.0 to 33.5 feet: no gravelly drilling (drills smooth). |
| | | | | | | | | @ 33.3 feet: 0.2-inch of SILTY SAND. |
| S-8 | 87 | 26-12-27 (39) | | | | | | **33.5 to 34.6 feet: CLAYEY GRAVEL (GC)**, dark greenish gray (5GY 4/1); 30 to 40 percent low plasticity silt, 60 to 70 percent fine to coarse gravel, dense; wet. |
| S-9 | | 27-50/6" | | 35 | | | | @ 33.8 feet: 0.3-foot-thick silty clay (CL) layer, dark brown, several 1/2-inch gravels; moist. |
| | | | | | | | | **34.6 to 36.5 feet: SILTSTONE (SS)**, brown. |
| | | | | | | | | Drilling terminated at 36.5 feet below ground surface. |
| | | | | 40 | | | | |

## REMARKS

Drilled with 10-inch O.D. (6.5-inch I.D.) hollow stem auger. Samples collected with either a 1.5-inch or 3-inch I.D. by 1.5-foot-long split spoon. A 2-inch PVC monitoring well was constructed in the borehole. Well construction information presented in well details. See explanation for definition of symbols. MW-9B(R) was installed approximated 50 feet east of MW-9B, which was decommissioned.

EMCON NORTHWEST

# WELL DETAILS

CLIENT Riverbend Landfill Company, Inc.
PROJECT NUMBER 0258-001.45
PROJECT NAME Monitoring Well Replacement
LOCATION McMinnville, Oregon
WELL PERMIT NO. 69764

BORING / WELL NO. MW-9B (R)
TOP OF CASING ELEV. 127.40
GROUND SURFACE ELEV. 124.8
DATUM Feet-Mean Sea Level
INSTALLATION DATE 8/24/94

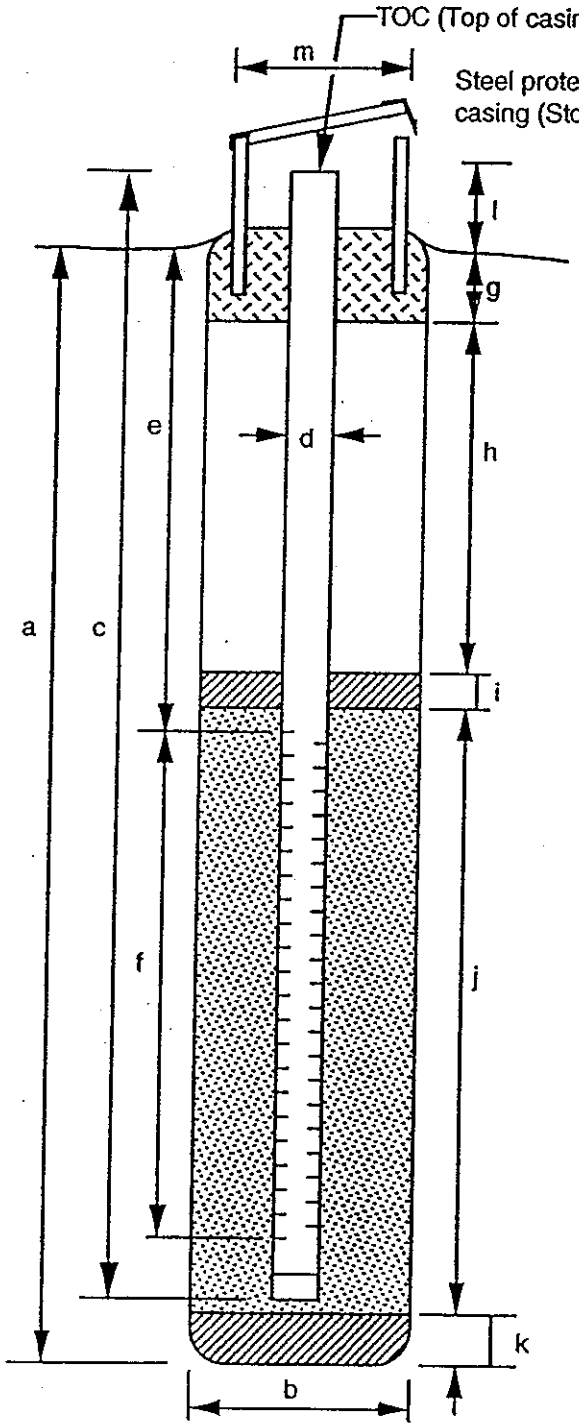


## EXPLORATORY BORING

a. Total depth 36.5 ft.
b. Diameter 10 in.
Drilling method Hollow Stem Auger

## WELL CONSTRUCTION

c. Total casing length (+2.2 to 34.2) 36.4 ft.
Material Schedule 40 PVC
d. Diameter 2 in.
e. Depth to top perforations 28.2 ft.
f. Perforated length 4.5 ft.
Perforated interval from 28.2 to 32.7 ft.
Perforation type Machine Slotted
Perforation size 0.010 Inches
g. Surface seal (0 to 2.0) 2.0 ft.
Material Concrete
h. Backfill N.A. ft.
Material N.A.
i. Seal (2.0 to 26.0) 24.0 ft.
Material Bentonite
j. Gravel pack 7.4 ft.
Gravel pack interval from 26.0 to 33.4 ft.
Material 10-20 Gradation Sand
k. Bottom seal/fill (33.4 to 36.5) 3.1 ft.
Material Bentonite
l. Casing stickup 2.2 ft.
m. Protective casing diameter 6.5 in.
Centralizers at 16 and 32 feet bgs.

Prepared by: Craig Fanshier
Note: MW-9B was decommissioned and MW-9B (R) was installed approximately 50 feet to the east.

# LOG OF EXPLORATORY BORING

| | | | |
|---|---|---|---|
| PROJECT NAME | Additional Hydrogeologic Investigation | BORING NO. | MW-10A |
| LOCATION | Riverbend Landfill; McMinnville, Oregon | PAGE | 1 OF 2 |
| DRILLED BY | Geo-Tech Explorations, Inc. | GROUND ELEV. | 150.80' |
| DRILL METHOD | Hollow Stem Auger | TOTAL DEPTH | 28.30' |
| LOGGED BY | Craig D. Fanshier | DATE COMPLETED | 10/27/93 |

| RECOVERY PERCENT | POCKET PENETROMETER (Tons/SF) | PENETRATION (Blows/Ft) | GROUND WATER LEVELS | DEPTH IN FEET | SAMPLES | LITHOLOGIC COLUMN | WELL DETAILS | LITHOLOGIC DESCRIPTION |
|---|---|---|---|---|---|---|---|---|
| 100 | | | | | | | | **0 to 25.5 feet: CLAYEY SILT (ML),** dark grayish (10YR 4/2); 95 percent low plasticity fines; 5 percent sand, micaceous; abundant small macro pores, 1/32 to 1/15 inch in diameter, minor amount of slightly larger ones approximately 3/32 inch in diameter; minor amounts of 1/4 to 3/8 inch horizontal soil partings; stiff to very stiff; damp. |
| | >1.5 | | 1/5/94 | | | | | |
| | 3.5 | | | | | | | |
| | 2.5 | | | | | | | |
| 94 | 2.0 | | | 5 | | | | |
| | 2.5 | | | | | | | |
| | 2.5 | | | | | | | |
| | 2.5 | | | | | | | @ 7.5 feet: 3-inch-thick SILTY SAND (SM) lense, 10 percent low plasticity fines (silt); 90 percent fine sand, rounded to subrounded, well sorted; appears loose; moist. |
| | 1.75 | | | | | | | @ 8.0 feet: brown (10YR-4/3); moist. |
| 100 | 1.0 | | | 10 | | | | @ 10.5 feet: 3-inch-thick SILTY SAND (SM) lense, similar to the one at 7.5 feet. |
| | 1.25 | | | | | | | |
| | 1.25 | | | | | | | |
| | 1.5 | | | | | | | |
| | 1.5 | | | | | | | |
| 100 | | 11 | 5/27/93 | 15 | | | | @ 14.5 feet: wet. |
| 97 | | | | | | | | |
| | 2.0 | | | | | | | @ 16.0 feet: 0.4-foot-thick SILTY CLAY (CL) lense. Paleo-soil horizon with black (carbon) root traces. |
| | 1.0 | | | | | | | |
| | 0.5 | | | | | | | @ 16.4 to 19.0 feet: minor amounts of almost indistinct SILTY SAND lenses, approximately 1- to 3-inch-thick, abundant platy varves, gradational between silt and sand. Note: core is very wet. |
| | 0.5 | | | | | | | |
| 80 | 0.75 | | | 20 | | | | |

## REMARKS

Drilled with 8-inch O.D. (4.25-inch I.D.) Hollow Stem Auger. Samples continuously collected with 5-foot long, 3-inch I.D. split barrel and 1.5-foot long, 3-inch O.D. split spoon fitted with rings. A 2-inch PVC monitoring well was constructed in the borehole. Well construction information presented in Well Details. See explanation for definition of symbols.

# LOG OF EXPLORATORY BORING

| | | | |
|---|---|---|---|
| PROJECT NAME | Additional Hydrogeologic Investigation | BORING NO. | MW-10A |
| LOCATION | Riverbend Landfill; McMinnville, Oregon | PAGE | 2 OF 2 |
| DRILLED BY | Geo-Tech Explorations, Inc. | GROUND ELEV. | 150.80' |
| DRILL METHOD | Hollow Stem Auger | TOTAL DEPTH | 28.30' |
| LOGGED BY | Craig D. Fanshier | DATE COMPLETED | 10/27/93 |

| RECOVERY PERCENT | POCKET PENETRO-METER (Tons/SF) | PENETRATION (Blows/Ft) | GROUND WATER LEVELS | DEPTH IN FEET | SAMPLES | LITHOLOGIC COLUMN | WELL DETAILS | LITHOLOGIC DESCRIPTION |
|---|---|---|---|---|---|---|---|---|
| | 0.5 | | | | | | | **0 to 25.5 feet: CLAYEY SILT (ML)**, continued. |
| | 0.5 | | | | | | | @ 21.0 feet: color changes to dark grayish gray (5G 4/1); 2-inch sand lense above color change. |
| | 0.5 | | | | | | | @ 22.0 to 23.5 feet: platy varves, sandy surface to each varve (fine sand). |
| | 0.75 | | | | | | | |
| 100 | 0.5 | | | | | | | |
| | 1.0 | | | 25 | | | | |
| | 1.5 | | | | | | | **25.5 to 27.0 feet: SILTY SAND (SM)**, dark greenish gray (5G 4/1); 10 percent low plasticity fines; 90 percent fine sand; appears loose, wet. |
| | 3.0 | | | | | | | **27.0 to 28.3 feet: SILTY CLAY (CL)**, dark greenish gray (5G 4/1); medium plasticity fines; very stiff; wet. |
| | 3.5 | | | | | | | BORING TERMINATED AT 28.3 FEET. |
| | | | | 30 | | | | |
| | | | | 35 | | | | |
| | | | | 40 | | | | |

## REMARKS

Drilled with 8-inch O.D. (4.25-inch I.D.) Hollow Stem Auger. Samples continuously collected with 5-foot long, 3-inch I.D. split barrel and 1.5-foot long, 3-inch O.D. split spoon fitted with rings. A 2-inch PVC monitoring well was constructed in the borehole. Well construction information presented in Well Details. See explanation for definition of symbols.

EMCON NORTHWEST

# WELL DETAILS

CLIENT Riverbend Landfill Company, Inc.
PROJECT NUMBER 0258-001.28
PROJECT NAME Additional Hydrogeologic Inv.
LOCATION McMinnville, Oregon
WELL PERMIT NO. 59129

BORING / WELL NO. MW-10A
TOP OF CASING ELEV. 153.21
GROUND SURFACE ELEV. 150.8
DATUM Feet-Mean Sea Level
INSTALLATION DATE 10/28/93

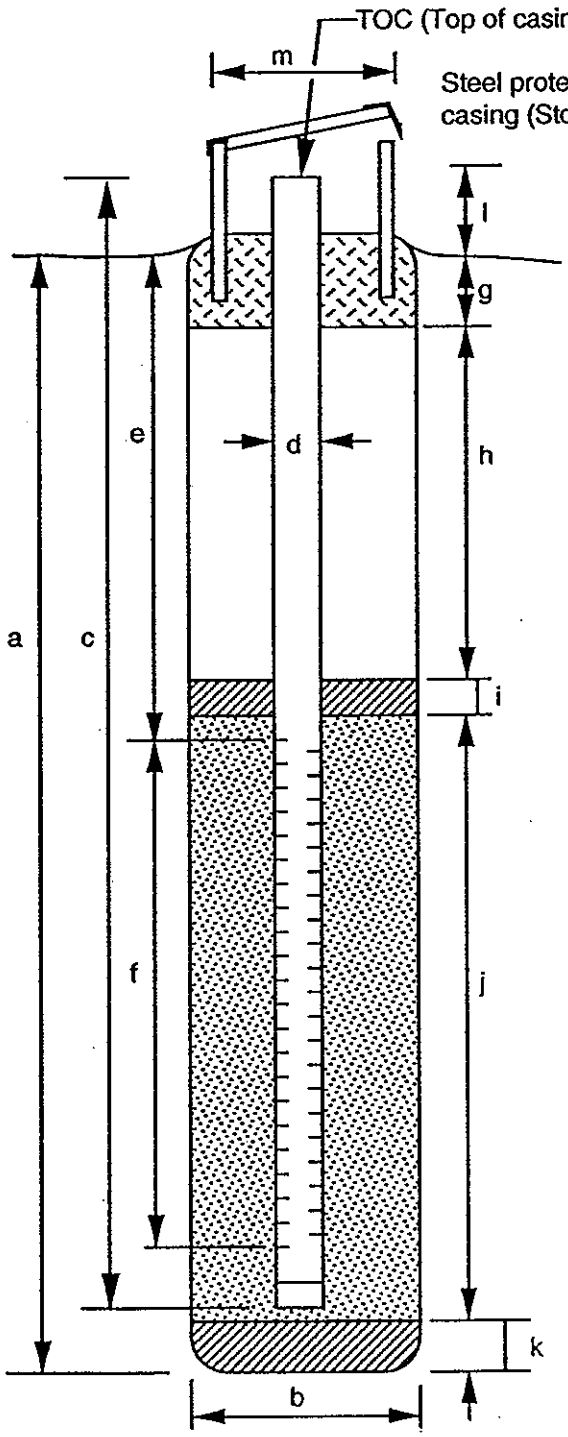


## EXPLORATORY BORING

a. Total depth 28.3 ft.
b. Diameter 8 in.
Drilling method Hollow Stem Auger

## WELL CONSTRUCTION

c. Total casing length (+2.4 to 27.6) 30.0 ft.
Material Schedule 40 PVC
d. Diameter 2 in.
e. Depth to top perforations 17.3 ft.
f. Perforated length 9.5 ft.
Perforated interval from 17.3 to 26.8 ft.
Perforation type Machine Slotted
Perforation size 0.010 Inches
g. Surface seal (0 to 2.5) 2.5 ft.
Material Concrete
h. Backfill N.A. ft.
Material N.A.
i. Seal (2.2 to 14.0) 11.8 ft.
Material Bentonite
j. Gravel pack 14.3 ft.
Gravel pack interval from 14.0 to 28.3 ft.
Material 10-20 Gradation Sand
k. Bottom seal/fill N.A. ft.
Material N.A.
l. Casing stickup 2.4 ft.
m. Protective casing diameter 6.5 in.

Prepared by: Craig Fanshier

Ventura Mac 4 Rev. 7/23/91

# LOG OF EXPLORATORY BORING

| | | | |
|---|---|---|---|
| PROJECT NAME | Additional Hydrogeologic Investigation | BORING NO. | MW-10B |
| LOCATION | Riverbend Landfill; McMinnville, Oregon | PAGE | 1 OF 4 |
| DRILLED BY | Geo-Tech Explorations, Inc. | GROUND ELEV. | 150.80' |
| DRILL METHOD | Hollow Stem Auger | TOTAL DEPTH | 69.00' |
| LOGGED BY | Craig D. Fanshier | DATE COMPLETED | 10/25/93 |

| RECOVERY PERCENT | POCKET PENETROMETER (Tons/SF) | PENETRATION (Blows/Ft) | GROUND WATER LEVELS | DEPTH IN FEET | SAMPLES | LITHOLOGIC COLUMN | WELL DETAILS | LITHOLOGIC DESCRIPTION |
|---|---|---|---|---|---|---|---|---|
| 90 | 1.0 | | | | | | | **0 to 4.0 feet:** CLAYEY SILT (ML), brown (10YR 5/3), mostly evenly colored, trace lightly reddish brown mottling; low plasticity fines; trace fine sand, micaceous; some small macro pores (approximately 1/16-inch-diameter); very stiff; damp. Approximately 3/8-inch-thick poorly developed horizontal partings. |
| | 4.0 | | | | | | | |
| | 4.0 | | | | | | | |
| | 3.5 | | | | | | | |
| | 2.5 | | | | | | | |
| 100 | 2.0 | | | | | | | **4.0 to 28.0 feet:** SANDY SILT (SM), brown (10YR 4/3), approximately 5 percent small, light reddish brown mottling; 50 to 80 percent low plasticity fines; 20 to 50 percent fine sand, moderately sorted, subangular to subrounded, micaceous; abundant small (at 4.0 to 24.0 feet) macro pores (approximately 1/32- to 1/16-inch-diameter), approximately (5 to 10 per square inch) some larger vertically oriented macro pores (1/4-inch-diameter) approximately 1 to 2 per foot of core, open with no moisture, horizontal partings, are absent or very poorly developed; very stiff; damp to moist, moist at 8.0 feet, minor 2- to 3-inch-thick SILTY SAND lenses from 4.0 to 19.0 feet interbedded with gradational contact. |
| | 2.5 | | | 5 | | | | |
| | 2.0 | | | | | | | |
| | 2.5 | | | | | | | |
| | | | 10/25/93 ▽ | | | | | |
| 100 | 1.75 | | | | | | | |
| | 1.5 | | | 10 | | | | |
| | 1.0 | | | | | | | |
| | 1.5 | | | | | | | |
| | 1.0 | | | | | | | |
| 100 | 0.75 | | | | | | | |
| | 0.5 | | | 15 | | | | |
| | 0.75 | | ▼ 1/5/94 | | | | | |
| | 0.5 | | | | | | | |
| | 3.0 | | | | | | | |
| | 1.5 | | | | | | | |
| 100 | 3.5 | | | 20 | | | | |

@ 9.0 feet: changes to medium stiff to stiff.
@ 11.0 feet: wet.

@ 14.0 to 14.5 feet: SILTY SAND (SM) lense.

@ 17.5 to 17.9 feet: CLAYEY SILT (ML), very stiff.
@ 18.4 to 18.9 feet: SILTY SAND (SM) lense.
@ 19.5 feet: very sharp change in color to dark greenish gray (5G 4/1); strongly developed 1/4 to 3/8 inch varves (soil partings).

## REMARKS

Drilled with 10-inch O.D. (6.5-inch I.D.) Hollow Stem Auger. Samples continuously collected with 5-foot long, 3-inch I.D. split barrel and 1.5-foot long, 3-inch O.D. split spoon fitted with rings. A 2-inch PVC monitoring well was constructed in the borehole. Well construction information presented in Well Details. See explanation for definition of symbols.

# LOG OF EXPLORATORY BORING

| | | | |
|---|---|---|---|
| PROJECT NAME | Additional Hydrogeologic Investigation | BORING NO. | MW-10B |
| LOCATION | Riverbend Landfill; McMinnville, Oregon | PAGE | 2 OF 4 |
| DRILLED BY | Geo-Tech Explorations, Inc. | GROUND ELEV. | 150.80' |
| DRILL METHOD | Hollow Stem Auger | TOTAL DEPTH | 69.00' |
| LOGGED BY | Craig D. Fanshier | DATE COMPLETED | 10/25/93 |

| RECOVERY PERCENT | POCKET PENETROMETER (Tons/SF) | PENETRATION (Blows/Ft) | GROUND WATER LEVELS | DEPTH IN FEET | SAMPLES | LITHOLOGIC COLUMN | WELL DETAILS | LITHOLOGIC DESCRIPTION |
|---|---|---|---|---|---|---|---|---|
| | 2.0 | | | | | | | 4.0 to 28.0 feet: SANDY SILT (SM), continued. |
| | 1.5 | | | | | | | @ 20.0 feet: interbedded small (0.2- to 0.6-foot-thick) CLAYEY SILT (ML) and SILTY SAND (SM) lenses. |
| | 1.5 | | | | | | | @ 20.0 to 23.0 feet: slight purplish tint. |
| | 0.5 | | | | | | | |
| | 0.5 | | | | | | | |
| | 1.0 | | | | | | | |
| 100 | 1.0 | 25 | | | | | | |
| | | | | 25 | | | | |
| 100 | 2.5 | | | | | | | @ 26.0 feet: SANDY SILT (ML) lenses. |
| | 4.0 | | | | | | | |
| | 2.5 | | | | | | | |
| | 1.0 | | | | | | | @ 28.0 feet: soil is crumbly; wet. |
| | 3.5 | | | | | | | 28.0 to 38.0 feet: SILTY CLAY (CL), dark greenish gray (5G 4/1), evenly colored; 95 percent low to medium plasticity fines; 0 to 5 percent fine sand; abundant very small 1/32 inch macro pores; some minor lenses of varves (1/4-inch-thick partings); soft to medium stiff; wet. |
| 100 | 0.75 | | | | | | | |
| | 1.5 | | | 30 | | | | |
| | >0.5 | | | | | | | |
| | >0.5 | | | | | | | |
| | 1.0 | | | | | | | |
| | 1.5 | | | | | | | |
| | >0.5 | | | | | | | |
| 80 | | 25 | | | | | | |
| | | | | 35 | | | | @ 35.0 to 39.0 feet: drilling gets harder (hard layers with several small gravels); very stiff. |
| 100 | 3.0 | | | | | | | |
| | 2.5 | | | | | | | @ 37.0 to 38.0 feet: 20 percent fine gravels; grayish green (5G 4/2). |
| | | | | | | | | @ 38.0 feet: rocky drilling noise. |
| | | | | | | | | 38.0 to 39.0 feet: SANDY GRAVEL (GP), grayish green (5G 4/2); 10 to 15 percent low to medium plasticity fines; continues. |
| 40 | | | | 40 | | | | |

## REMARKS

Drilled with 10-inch O.D. (6.5-inch I.D.) Hollow Stem Auger. Samples continuously collected with 5-foot long, 3-inch I.D. split barrel and 1.5-foot long, 3-inch O.D. split spoon fitted with rings. A 2-inch PVC monitoring well was constructed in the borehole. Well construction information presented in Well Details. See explanation for definition of symbols.

# LOG OF EXPLORATORY BORING

| | | | |
|---|---|---|---|
| PROJECT NAME | Additional Hydrogeologic Investigation | BORING NO. | MW-10B |
| LOCATION | Riverbend Landfill; McMinnville, Oregon | PAGE | 3 OF 4 |
| DRILLED BY | Geo-Tech Explorations, Inc. | GROUND ELEV. | 150.80' |
| DRILL METHOD | Hollow Stem Auger | TOTAL DEPTH | 69.00' |
| LOGGED BY | Craig D. Fanshier | DATE COMPLETED | 10/25/93 |

| RECOVERY PERCENT | POCKET PENETRO-METER (Tons/SF) | PENETRATION (Blows/Ft) | GROUND WATER LEVELS | DEPTH IN FEET | SAMPLES | LITHOLOGIC COLUMN | WELL DETAILS | LITHOLOGIC DESCRIPTION |
|---|---|---|---|---|---|---|---|---|
| 100 | | 50/6" | | 45 | | | | **38.0 to 39.0 feet: SANDY GRAVEL (GP),** continued: 30 to 40 percent fine to coarse sands; 50 to 60 percent fine to coarse gravel; appears medium dense; wet. |
| 57 | | | | | | | | **39.0 to 44.5 feet: CLAYEY GRAVEL (GC),** dark yellowish brown (10YR 3/4), shade varies, some moderate iron oxide staining; 10 to 30 percent medium plasticity fines; 10 to 20 percent fine to coarse sand; 50 to 60 percent fine gravels, matrix supported, mostly rounded; appears medium dense; wet. Note: the clayey matrix is sticky. Minor 2 to 6 inch lense with approximately 5 percent fines; loose. |
| | | | | | | | | @ 41.0 feet: core barrel recovery blocked by 3 inch rock wedged into the core barrel. |
| | | | | | | | | @ 44.0 feet: split spoon in CLAYEY GRAVEL (GC), penetration blocked by gravel; dense. |
| 96 | | | | 50 | | | | **44.5 to 60.0 feet: SANDY GRAVEL (GP),** dark yellowish brown (10YR 3/6); 10 to 15 percent low plasticity fines; 30 percent fine to coarse sand (F:C = 1:1); 55 to 60 percent fine to coarse gravel (F:C = 2:1), gravels subangular, matrix supported; dense to very dense; wet. |
| | | | | | | | | @ 49.0 to 54.0 feet: mostly fine gravel in a dense silty sand with trace clay matrix; very hard drilling, engine is lugging. |
| 96 | | | | 55 | | | | @ 53.5 to 53.8 feet: 2-inch-thick SILTY CLAY (CL) lense in the core barrel shoe. |
| | | | | | | | | @ 54.0 feet: color changes to dark greenish gray (5GY 4/1). |
| | | | | | | | | @ 54.0 to 54.3 feet: CLAYEY GRAVEL (GC). |
| | | | | | | | | @ 57.5 to 58.2 feet: lenses of SILTY CLAY (CL) with 5 percent medium sand (possibly altered volcanic ash). |
| 100 | | | | 60 | | | | @ 59.0 feet: thin clay lense. |

## REMARKS

Drilled with 10-inch O.D. (6.5-inch I.D.) Hollow Stem Auger. Samples continuously collected with 5-foot long, 3-inch I.D. split barrel and 1.5-foot long, 3-inch O.D. split spoon fitted with rings. A 2-inch PVC monitoring well was constructed in the borehole. Well construction information presented in Well Details. See explanation for definition of symbols.

# LOG OF EXPLORATORY BORING

| | | | |
|---|---|---|---|
| PROJECT NAME | Additional Hydrogeologic Investigation | BORING NO. | MW-10B |
| LOCATION | Riverbend Landfill; McMinnville, Oregon | PAGE | 4 OF 4 |
| DRILLED BY | Geo-Tech Explorations, Inc. | GROUND ELEV. | 150.80' |
| DRILL METHOD | Hollow Stem Auger | TOTAL DEPTH | 69.00' |
| LOGGED BY | Craig D. Fanshier | DATE COMPLETED | 10/25/93 |

| RECOVERY PERCENT | POCKET PENETROMETER (Tons/SF) | PENETRATION (Blows/Ft) | GROUND WATER LEVELS | DEPTH IN FEET | SAMPLES | LITHOLOGIC COLUMN | WELL DETAILS | LITHOLOGIC DESCRIPTION |
|---|---|---|---|---|---|---|---|---|
| | 4.0 | | | | | | | **60.0 to 61.0 feet: CLAYEY SAND (SC)**, dark greenish gray; 40 percent medium plasticity fines; 60 percent fine to medium sand; hard; wet. |
| | | | | | | | | **61.0 to 61.5 feet: SILTY SAND (SM)** |
| | | | | | | | | **61.5 to 62.5 feet: SAND (SP)** |
| 100 | | | | 65 | | | | **62.5 to 69.0 feet: SANDY GRAVEL (GP)**, dark greenish gray; 40 percent medium to coarse sand (M:C = 1:1), angular to subrounded; 60 percent gravels (F:C = 2:1), larger gravels are smooth (water worked); minor amounts of brown wood fragments at 62.0 to 64.0 feet; appears dense; wet.<br>@ 67.0 feet: several 1-inch by 1/16-inch gravels (flat), many gravels rounded.<br>@ 68.0 to 69.0 feet: appears looser.<br>@ 69.0 feet: 1-foot of sand heave in auger. |
| | | | | 70 | | | | **BORING TERMINATED AT 69.0 FEET.** |
| | | | | 75 | | | | |
| | | | | 80 | | | | |

## REMARKS

Drilled with 10-inch O.D. (6.5-inch I.D.) Hollow Stem Auger. Samples continuously collected with 5-foot long, 3-inch I.D. split barrel and 1.5-foot long, 3-inch O.D. split spoon fitted with rings. A 2-inch PVC monitoring well was constructed in the borehole. Well construction information presented in Well Details. See explanation for definition of symbols.

EMCON NORTHWEST

# WELL DETAILS

CLIENT Riverbend Landfill Company, Inc.
PROJECT NUMBER 0258-001.28
PROJECT NAME Additional Hydrogeologic Inv.
LOCATION McMinnville, Oregon
WELL PERMIT NO. 59133

BORING / WELL NO. MW-10B
TOP OF CASING ELEV. 152.87
GROUND SURFACE ELEV. 150.8
DATUM Feet-Mean Sea Level
INSTALLATION DATE 10/27/93

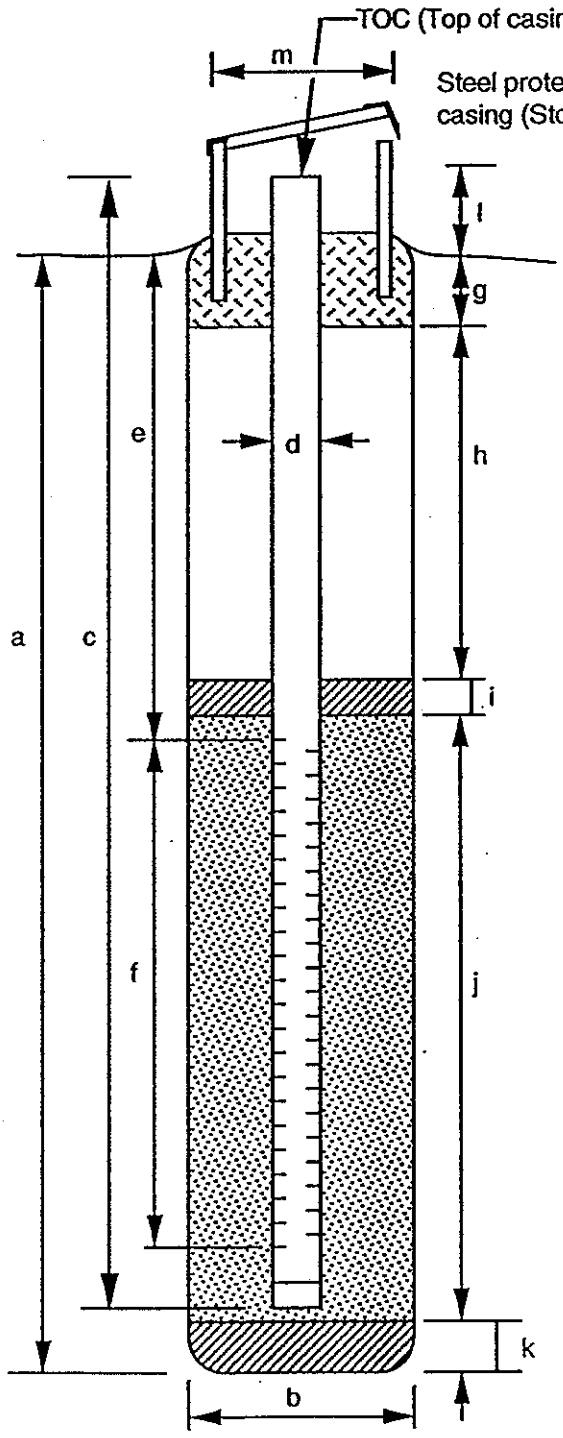


## EXPLORATORY BORING

a. Total depth 69.0 ft.
b. Diameter 10 in.
Drilling method Hollow Stem Auger

## WELL CONSTRUCTION

c. Total casing length (+2.1 to 54.6) 56.7 ft.
Material Schedule 40 PVC
d. Diameter 2 in.
e. Depth to top perforations 44.3 ft.
f. Perforated length 9.5 ft.
Perforated interval from 44.3 to 53.8 ft.
Perforation type Machine Slotted
Perforation size 0.010 Inches
g. Surface seal (0 to 2.0) 2.0 ft.
Material Concrete
h. Backfill N.A. ft.
Material N.A.
i. Seal (2.0 to 40.9) 38.9 ft.
Material Bentonite
j. Gravel pack 14.4 ft.
Gravel pack interval from 40.9 to 55.3 ft.
Material 10-20 Gradation Sand
k. Bottom seal/fill (55.3 to 69.0) 13.7 ft.
Material Bentonite
l. Casing stickup 2.1 ft.
m. Protective casing diameter 6.5 in.
Centralizers at 20.0 and 43.0 feet bgs.

Prepared by: Craig Fanshier

Ventura Mac 4 Rev. 7/23/91

# WELL DETAILS

EMCON

CLIENT Riverbend Landfill Company, Inc
PROJECT NUMBER 0258-001.50
PROJECT NAME Additional Hydrogeologic Investigation
LOCATION McMinnville, Oregon
WELL PERMIT NO. 80945

BORING / WELL NO. MW-12A
TOP OF CASING ELEV. 126.0
GROUND SURFACE ELEV. 123.8
DATUM FT - MSL
INSTALLATION DATE 7/19/95

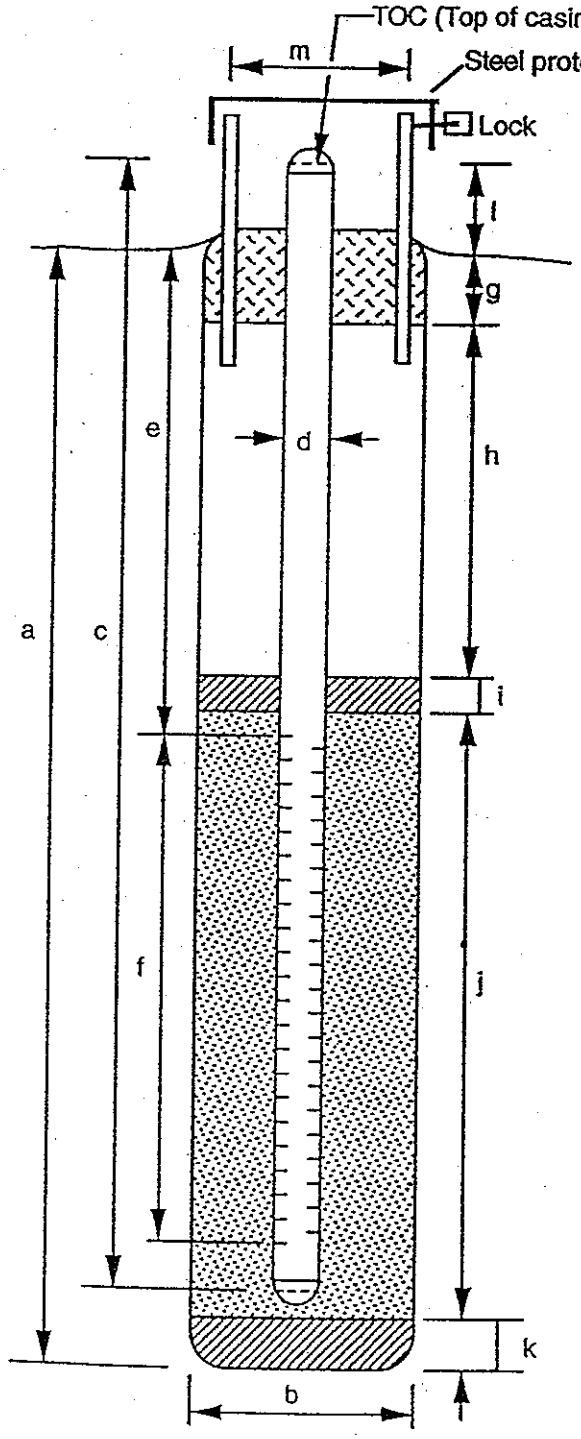


## EXPLORATORY BORING

a. Total depth 25.5 ft.
b. Diameter 10.5 in.
Drilling method Hollow-Stem Auger

## WELL CONSTRUCTION

c. Total casing length 28.1 ft.
Material Schedule 40 PVC
d. Diameter 2.0 in.
e. Depth to top perforations 15.3 ft.
f. Perforated length 9.5 ft.
Perforated interval from 15.3 to 24.8 ft.
Perforation type Machine-Slotted
Perforation size 0.010 in.
g. Surface seal (0.0 to 0.5) 0.5 ft.
Material Concrete
h. Backfill NA ft.
Material NA
i. Seal (0.5 to 12.0) 11.5 ft.
Material Bentonite
j. Gravel pack 13.5 ft.
Gravel pack interval from 12.0 to 25.5 ft.
Material 10-20 Gradation Sand
k. Bottom seal/fill None 0 ft.
Material NA
l. Casing stickup 2.75 ft.
m. Protective casing diameter 6.5 in.

Well Constructed by CDF

# LOG OF EXPLORATORY BORING

| | | | |
|---|---|---|---|
| PROJECT NAME | **Riverbend, Monitoring Well Installation** | BORING NO. | **MW-12A** |
| LOCATION | **McMinnville, Oregon** | PAGE | **1 OF 2** |
| DRILLED BY | **Geo-Tech Explorations, Inc.** | GROUND ELEV. | **123.80'** |
| DRILL METHOD | **Hollow Stem Auger** | TOTAL DEPTH | **25.50'** |
| LOGGED BY | **Craig D. Fanshier** | DATE COMPLETED | **07/19/95** |

| SAMPLE METHOD AND NUMBER | RECOVERY (PERCENT) | BLOW COUNTS (N COMP) | LITHOLOGIC DESCRIPTION |
|---|---|---|---|
| | | | **0 to 23.0 feet:** SILTY CLAY (CL); dark brown (10YR 3/3), with 20 percent reddish brown mottling; medium plasticity fines; very stiff; damp. |
| SS S-1 | 60 | 6-7-9 (16) | |
| SS S-2 | 80 | 6-8-8 (16) | @ 9.0 feet: approximately 20 to 30 percent gray mottling. |
| SS S-3* | 100 | 2-2-3 (5) | @ 14.0 feet: 5 percent fine sand; firm; moist, visible moisture on mottled soil. |
| SS S-4* | 100 | 1-1-2 (3) | @ 19.0 feet: wet. |

GROUND WATER LEVELS: 7/24/95 ▼ ; 7/19/95 ▽

DEPTH IN FEET: 5, 10, 15, 20

SAMPLES

WELL DETAILS

LITHOLOGIC COLUMN

## REMARKS

Borehole drilled with 10.5-inch O.D. (6.25-inch I.D.) hollow stem augers. Soil samples collected with 2.0-inch O.D. (1.4-inch I.D.) split spoons (SS). Blow counts are for 6-inch intervals. A 2-inch-diameter Schedule 40 PVC monitoring well was constructed in the borehole. Well construction information is presented in well details diagram (attached). See explanation for definition of symbols. * = intervals where split spoons were inadvertently overdriven.

EMCON

# LOG OF EXPLORATORY BORING

| | | | |
|---|---|---|---|
| PROJECT NAME | Riverbend, Monitoring Well Installation | BORING NO. | MW-12A |
| LOCATION | McMinnville, Oregon | PAGE | 2 OF 2 |
| DRILLED BY | Geo-Tech Explorations, Inc. | GROUND ELEV. | 123.80' |
| DRILL METHOD | Hollow Stem Auger | TOTAL DEPTH | 25.50' |
| LOGGED BY | Craig D. Fanshier | DATE COMPLETED | 07/19/95 |

| SAMPLE METHOD AND NUMBER | RECOVERY (PERCENT) | BLOW COUNTS (N COMP) | GROUND WATER LEVELS | DEPTH IN FEET | SAMPLES | WELL DETAILS | LITHOLOGIC COLUMN | LITHOLOGIC DESCRIPTION |
|---|---|---|---|---|---|---|---|---|
| SS S-5* | 100 | 1-2-2 (4) | | 25 | | | | **0 to 23.0 feet: SILTY CLAY (CL); continued.**<br><br>@ 20.0 feet: dark greenish gray (5G 4/1), with 10 to 20 percent reddish brown mottling; trace fine sand.<br><br>**23.0 to 25.5 feet: CLAYEY SILT (ML);** dark greenish gray (5G 4/1); 95 percent low to medium plasticity fines; 5 percent fine sand; soft; wet. 0.5-inch-thick layers of silty sands (50 percent fine sand and 50 percent low plasticity fines) at 23.5, 24.2, and 25.0 feet. 0.5-inch irregularly shaped areas of reddish brown iron oxide(?) staining.<br>Total depth drilled = 25.5 feet.<br>Total depth sampled = 25.7 feet. |
| | | | | 30 | | | | |
| | | | | 35 | | | | |
| | | | | 40 | | | | |

## REMARKS

Borehole drilled with 10.5-inch O.D. (6.25-inch I.D.) hollow stem augers. Soil samples collected with 2.0-inch O.D. (1.4-inch I.D.) split spoons (SS). Blow counts are for 6-inch intervals. A 2-inch-diameter Schedule 40 PVC monitoring well was constructed in the borehole. Well construction information is presented in well details diagram (attached). See explanation for definition of symbols. * = Intervals where split spoons were inadvertently overdriven.

EMCON

# WELL DETAILS

EMCON

CLIENT Riverbend Landfill Company, Inc
PROJECT NUMBER 0258-001.50
PROJECT NAME Additional Hydrogeologic Investigation
LOCATION McMinnville, Oregon
WELL PERMIT NO. 80944

BORING / WELL NO. MW-12B
TOP OF CASING ELEV. 126.54
GROUND SURFACE ELEV. 124.0
DATUM FT - MSL
INSTALLATION DATE 7/19/95

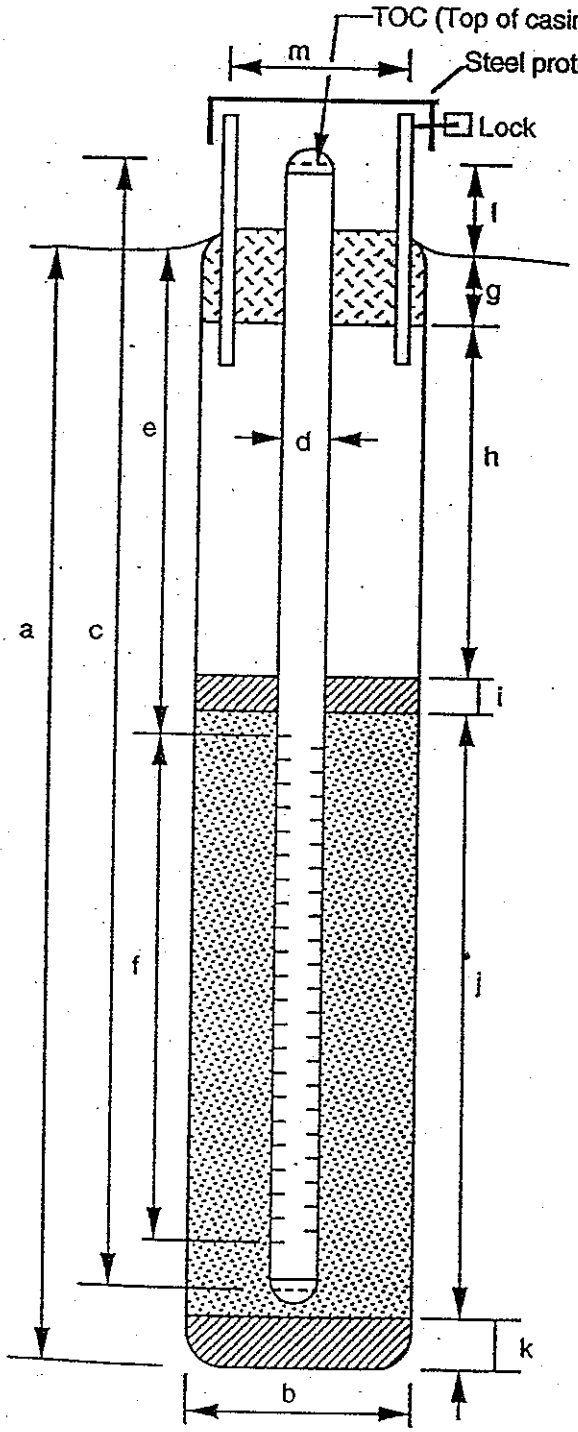


## EXPLORATORY BORING

a. Total depth 49.9 ft.
b. Diameter 10.5 in.
Drilling method Hollow-Stem Auger

## WELL CONSTRUCTION

c. Total casing length 46.8 ft.
Material Schedule 40 PVC
d. Diameter 2.0 in.
e. Depth to top perforations 34.3 ft.
f. Perforated length 9.5 ft.
Perforated interval from 34.3 to 43.8 ft.
Perforation type Machine-Slotted
Perforation size 0.010 in.
g. Surface seal (0.0 to 1.9) 1.9 ft.
Material Concrete
h. Backfill NA ft.
Material NA
i. Seal (1.9 to 31.0) 29.1 ft.
Material Bentonite
j. Gravel pack 14.0 ft.
Gravel pack interval from 31.0 to 45.0 ft.
Material 10-20 Gradation Sand
k. Bottom seal/fill (45.0 to 49.9) 4.9 ft.
Material Bentonite
l. Casing stickup 2.54 ft.
m. Protective casing diameter 6.5 in.

Centralized at 18 to 32 feet bgs

Well Constructed by CDF

# LOG OF EXPLORATORY BORING

| | | | |
|---|---|---|---|
| PROJECT NAME | Riverbend, Monitoring Well Installation | BORING NO. | MW-12B |
| LOCATION | McMinnville, Oregon | PAGE | 1 OF 3 |
| DRILLED BY | Geo-Tech Explorations, Inc. | GROUND ELEV. | 124.00' |
| DRILL METHOD | Hollow Stem Auger | TOTAL DEPTH | 49.90' |
| LOGGED BY | Craig D. Fanshier | DATE COMPLETED | 07/19/95 |

| POCKET PENETRO-METER (Tons/SF) | SAMPLE TYPE | BLOW COUNTS (RECOVERY PERCENT) | GROUND WATER LEVELS | DEPTH IN FEET | SAMPLES | WELL DETAILS | LITHOLOGIC COLUMN | LITHOLOGIC DESCRIPTION |
|---|---|---|---|---|---|---|---|---|
| | CS | 93 | | | | | | **0 to 6.0 feet: SILTY CLAY (CL);** brown (10YR 4/3); medium plasticity fines, trace micaceous; minerals; very stiff; damp. |
| | | | | | | | | @ 1.0 to 3.5 feet: 5 percent, 1/4- to 1/2-inch pieces of charcoal. |
| 3.35 | | | | | | | | @ 4.0 feet: 5 percent gray mottling. |
| | CS | 98 | | 5 | | | | |
| | | | | | | | | **6.0 to 12.5 feet:** CLAY (CL); brown (10YR 4/3), with 5 to 10 percent reddish brown and 5 percent gray indistinct mottling; medium plasticity fines; very stiff; damp. |
| 3.2 | | | | | | | | |
| 2.8 | | | | | | | | |
| | CS | 94 | | 10 | | | | |
| 2.5 | | | | | | | | |
| | | | | | | | | @ 12.5 feet: moist. |
| 1.5 | | | | | | | | **12.5 to 22.0 feet:** SILTY CLAY (ML) WITH SAND; brown (10YR 4/3), 5 percent reddish brown indistinct mottling; 80 to 95 percent medium plasticity fines; 5 to 20 percent fine sand; stiff; moist. |
| 1.0 | CS | 54 | | 15 | | | | |
| 0.8 | | | | | | | | |
| | | | 7/24/95 ▼ | | | | | |
| | | | | 20 | | | | |

## REMARKS

Borehole drilled with 10.5-inch O.D. (6.25-inch I.D.) hollow stem augers. Soil samples collected with 5.5-inch I.D. continuous sampler (CS). A 2-inch-diameter Schedule 40 PVC monitoring well was constructed in the borehole. Well construction information is presented in well details diagram (attached). See explanation for definition of symbols.

EMCON

# LOG OF EXPLORATORY BORING

| | | | |
|---|---|---|---|
| PROJECT NAME | Riverbend, Monitoring Well Installation | BORING NO. | MW-12B |
| LOCATION | McMinnville, Oregon | PAGE | 2 OF 3 |
| DRILLED BY | Geo-Tech Explorations, Inc. | GROUND ELEV. | 124.00' |
| DRILL METHOD | Hollow Stem Auger | TOTAL DEPTH | 49.90' |
| LOGGED BY | Craig D. Fanshier | DATE COMPLETED | 07/19/95 |

| POCKET PENETRO-METER (Tons/SF) | SAMPLE TYPE | BLOW COUNTS (RECOVERY PERCENT) | GROUND WATER LEVELS | DEPTH IN FEET | SAMPLES | WELL DETAILS | LITHOLOGIC COLUMN | LITHOLOGIC DESCRIPTION |
|---|---|---|---|---|---|---|---|---|
| 0.8 | CS | 96 | | | | | | **12.5 to 22.0 feet: SILTY CLAY (ML) WITH SAND;** continued. |
| 1.0 | | | | | | | | |
| <0.5 | | | ▽ 7/18/95 | | | | | @ 20.0 to 21.7 feet: 50 percent dark reddish brown and 50 percent gray mottling.<br>@ 22.0 feet: wet. |
| <0.5 | | | | | | | | **22.0 to 25.5 feet: SILT WITH SAND (ML);** dark greenish gray (5GY 4/1) with 10 percent reddish brown mottling; 75 to 80 percent low to medium plasticity fines; 20 to 25 percent fine sand; soft; wet. |
| | CS | 100 | | 25 | | | | |
| 1.0 | | | | | | | | @ 22.5 feet: a single 3-inch by 1/2-inch basalt gravel found within the silt matrix. |
| 1.0 | | | | | | | | **25.5 to 29.0 feet: CLAYEY SILT (ML);** dark greenish gray (5GY 4/1); 95 percent low to medium plasticity fines; 5 percent fine sand; firm to stiff; moist to wet. Several small (0.5-mm-diameter) macropores. |
| | CS | 76 | | 30 | | | | **29.0 to 37.2 feet: SANDY GRAVEL (GP);** very dark grayish green (2.5Y 3/2); 5 percent nonplastic fines (several 0.5-inch-thick layers contain 15 to 25 percent fines); 30 to 40 percent fine to medium angular sand; 55 to 65 percent fine subrounded gravels; wet. |
| | CS | 100 | | 35 | | | | |
| | | | | 40 | | | | **37.2 to 40.0 feet: SILTY GRAVEL (GM);** very dark greenish grayish green (2.5Y 3/2); 30 percent low plasticity fines; 15 to 20 percent fine sand; 50 to 55 percent fine gravels, gravels in point contact, description continued on next page. |

## REMARKS

Borehole drilled with 10.5-inch O.D. (6.25-inch I.D.) hollow stem augers. Soil samples collected with 5.5-inch I.D. continuous sampler (CS). A 2-inch-diameter Schedule 40 PVC monitoring well was constructed in the borehole. Well construction information is presented in well details diagram (attached). See explanation for definition of symbols.

EMCON

# LOG OF EXPLORATORY BORING

| | | | |
|---|---|---|---|
| PROJECT NAME | Riverbend, Monitoring Well Installation | BORING NO. | MW-12B |
| LOCATION | McMinnville, Oregon | PAGE | 3 OF 3 |
| DRILLED BY | Geo-Tech Explorations, Inc. | GROUND ELEV. | 124.00' |
| DRILL METHOD | Hollow Stem Auger | TOTAL DEPTH | 49.90' |
| LOGGED BY | Craig D. Fanshier | DATE COMPLETED | 07/19/95 |

| POCKET PENETRO-METER (Tons/SF) | SAMPLE TYPE | BLOW COUNTS (RECOVERY PERCENT) | GROUND WATER LEVELS | DEPTH IN FEET | SAMPLES | WELL DETAILS | LITHOLOGIC COLUMN | LITHOLOGIC DESCRIPTION |
|---|---|---|---|---|---|---|---|---|
| | CS | NA<br>90 | | | | | | **37.2 to 40.0 feet: SILTY GRAVEL (GM)**, continued: in the silty matrix; dense; driller noted very hard drilling; wet. The contact with the overlying unit is abrupt. |
| | CS | NA<br>94 | | 45 | | | | **40.0 to 48.0 feet: SANDY GRAVEL (GP)**; dark greenish gray (5GY 4/1), with a light olive brown layer at 42.3 to 43.0 feet; 5 percent nonplastic fines, 20 to 35 percent medium sand; 60 to 75 percent fine to coarse subrounded gravels (F:M:C = 3:1:1); appears medium to very dense; wet.<br>@ 40.0, 43.0, 46.0 to 46.5 feet: low angle (approximately 15 degrees) 0.5-inch-thick layers containing 20 to 25 percent low plasticity fines.<br>@ 44.8 to 48.0 feet: very hard drilling. |
| | | | | 50 | | | | **48.0 to 49.9 feet: CLAYEY GRAVEL (GC)**; dark greenish gray (5GY 4/1); 30 percent medium plasticity fines; 10 to 15 percent fine to medium sand; 55 to 60 percent fine to coarse subrounded gravels (F:M:C = 5:1:1); moist to wet. The gravel unit appears to be semi-consolidated and the fines in the matrix binds the gravels together.<br>Total depth drilled = 49.9 feet.<br>Total depth sampled = 49.9 feet. |
| | | | | 55 | | | | |
| | | | | 60 | | | | |

## REMARKS

Borehole drilled with 10.5-inch O.D. (6.25-inch I.D.) hollow stem augers. Soil samples collected with 5.5-inch I.D. continuous sampler (CS). A 2-inch-diameter Schedule 40 PVC monitoring well was constructed in the borehole. Well construction information is presented in well details diagram (attached). See explanation for definition of symbols.

EMCON

# WELL DETAILS

| | | | |
|---|---|---|---|
| Project Number: | 40258-001.053 | Boring/Well No.: | MW-14A |
| Client Name: | Riverbend Landfill | Top of Casing Elev.: | See note |
| Project Name: | Compliance Well Installation | Ground Surface Elev.: | See note |
| Location: | McMinnville, Oregon | Installation Date: | 10/16/96 |
| Driller: | Geo-Tech Explorations, Inc. | Permit/Start Card No.: | 93674 |

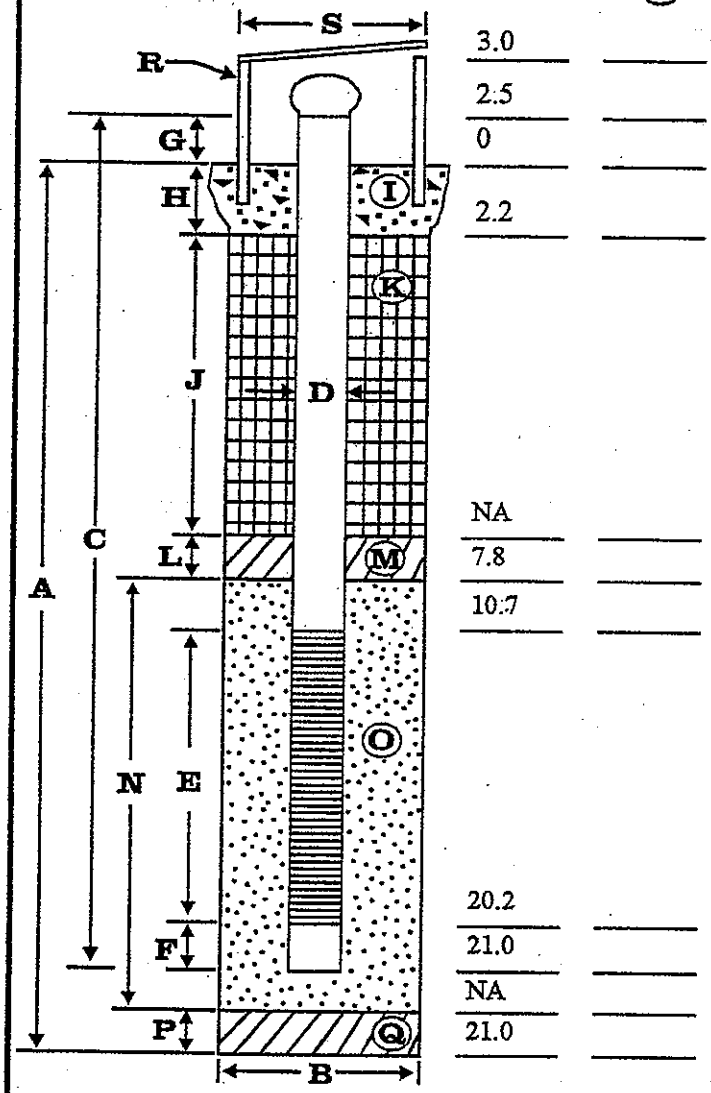


Installed by: Craig Fanshier

Reviewed by: Louis Caruso

Date: 12/6/96

## EXPLORATORY BORING

A. Total depth: 21.0 ft.
B. Diameter 10.0 in.
Drilling method: Hollow-stem auger

## WELL CONSTRUCTION

C. Well casing length: 23.5 ft.
Well casing material: Flush-threaded schedule 40 PVC
D. Well casing diameter: 2.0 in.
E. Well screen length: 9.5 ft.
Well screen type: Machine-slotted schedule 40 PVC
Well screen slot size: 0.010 in.
F. Well sump/end cap length: 0.8 ft.
G. Well casing height (stickup): 2.5 ft.
H. Surface seal thickness: 2.0 ft.
I. Surface seal material: Concrete
J. Annular seal thickness: 5.6 ft.
K. Annular seal material: Bentonite chips
L. Filter pack seal thickness: NA ft.
M. Filter pack seal material: NA
N. Sand pack thickness: 13.2 ft.
O. Sand pack material: 10-20 graded silica sand
P. Bottom material thickness: NA ft.
Q. Bottom material: NA
R. Protective casing material: Anodized aluminum
Well centralizer depths: – ft.
S. Protective casing diameter: 6.0 in.

## NOTES:

Well elevations were not surveyed because of restricted access due to weather conditions. Elevations will be surveyed and submitted when available.

P\L:\DATA\0258-RIV\01\3WEL-D.D09\SAB:3

# LOG OF EXPLORATORY BORING

| | | | |
|---|---|---|---|
| PROJECT NAME | **Riverbend Landfill - Sanifill** | BORING NO. | **MW-14A** |
| LOCATION | **McMinnville, Oregon** | PAGE | **1 OF 2** |
| DRILLED BY | **Geo-Tech Explorations, Inc.** | GROUND ELEV. | |
| DRILL METHOD | **Hollow Stem Auger** | TOTAL DEPTH | **42.00'** |
| LOGGED BY | **Craig D. Fanshier** | DATE COMPLETED | **10/15/96** |

| SAMPLE NUMBER (RECOVERY PERCENT) | SAMPLE TYPE | BLOW COUNTS (N COMP) | LITHOLOGIC DESCRIPTION |
|---|---|---|---|
| S-1 | Grab | | **0 to 3.0 feet: SILTY CLAY (CL)**; dark brown; medium plasticity fines; damp. |
| | | | **3.0 to 16.5 feet: SANDY SILT (ML)**; reddish brown; trace reddish mottling; 60 to 70 percent low to medium plasticity fines; 30 to 40 percent fine sand; very soft; moist. |
| S-2 (100) | SS2 | 1-1-3 (4) | |
| S-3 (100) | SS1 | 1-1-0 (1) | **16.5 to 19.0 feet: SILTY SAND (SM)**; reddish brown; 40 percent low to medium plasticity fines; 60 percent fine sand; wet; very loose; some layers (approximately 0.2-feet thick) have approximately 15 to 25 percent fines. |
| S-4 (100) | SS1 | 1-1-1 (2) | **19.0 to 21.0 feet: SANDY SILT (ML)**; reddish brown with 5 to 10 percent gray mottling; cont. |

GROUND WATER LEVELS: ▽ 10/16/96 8:30

DEPTH IN FEET: 5, 10, 15, 20

SAMPLES

WELL DETAILS

LITHOLOGIC COLUMN

## REMARKS

Exploratory boring drilled with 10-inch OD (6.25-inch ID) hollow stem augers. Soil sampled with 1.4-inch (SS1) and 2.5-inch (SS2) ID, 1.5-foot-long split-spoon samplers. Additional lithologic detail was provided from samples collected from the deeper boring approximately 8-feet away. A 2-inch PVC monitoring well was constructed in the borehole. Well construction information is summarized on the attached well details. See explanation for definition of symbols.

# LOG OF EXPLORATORY BORING

| | | | |
|---|---|---|---|
| PROJECT NAME | Riverbend Landfill - Sanifill | BORING NO. | MW-14A |
| LOCATION | McMinnville, Oregon | PAGE | 2 OF 2 |
| DRILLED BY | Geo-Tech Explorations, Inc. | GROUND ELEV. | |
| DRILL METHOD | Hollow Stem Auger | TOTAL DEPTH | 42.00' |
| LOGGED BY | Craig D. Fanshier | DATE COMPLETED | 10/15/96 |

| SAMPLE NUMBER (RECOVERY PERCENT) | SAMPLE TYPE | BLOW COUNTS (N COMP) | GROUND WATER LEVELS | DEPTH IN FEET | SAMPLES | WELL DETAILS | LITHOLOGIC COLUMN | LITHOLOGIC DESCRIPTION |
|---|---|---|---|---|---|---|---|---|
| S-5 (100) | SS2 | 3-5-8 (13) | | 25 30 35 40 | | | | 70 percent low plasticity fines; 30 percent fine sand; stiff; moist to wet.<br>@ 21.4 to 21.5 feet: bright reddish brown zone.<br>@ 21.5 feet: sandy silt to silty sand, dark greenish gray; low plasticity fines; 50 percent fine sand; moist to wet.<br>Drilling terminated at 21.0 feet bgs. |

## REMARKS

Exploratory boring drilled with 10-inch OD (6.25-inch ID) hollow stem augers. Soil sampled with 1.4-inch (SS1) and 2.5-inch (SS2) ID, 1.5-foot-long split-spoon samplers. Additional lithologic detail was provided from samples collected from the deeper boring approximately 8-feet away. A 2-inch PVC monitoring well was constructed in the borehole. Well construction information is summarized on the attached well details. See explanation for definition of symbols.

EMCON

# WELL DETAILS

| | | | |
|---|---|---|---|
| Project Number: | 40258-001.053 | Boring/Well No.: | MW-14B |
| Client Name: | Riverbend Landfill | Top of Casing Elev.: | See note |
| Project Name: | Compliance Well Installation | Ground Surface Elev.: | See note |
| Location: | McMinnville, Oregon | Installation Date: | 10/15/96 |
| Driller: | Geo-Tech Explorations, Inc. | Permit/Start Card No.: | 93673 |

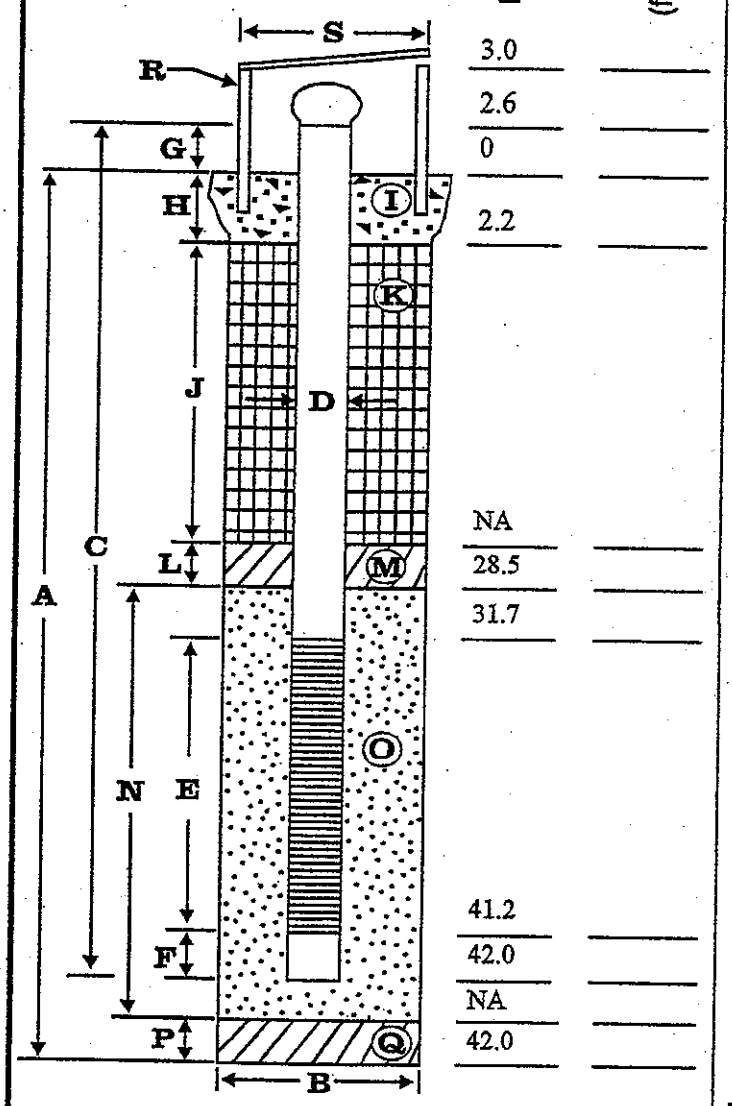


## EXPLORATORY BORING

| | |
|---|---|
| A. Total depth: | 42.0 ft. |
| B. Diameter | 10.0 in. |
| Drilling method: | Hollow-stem auger |

## WELL CONSTRUCTION

| | |
|---|---|
| C. Well casing length: | 44.6 ft. |
| Well casing material: | Flush-threaded schedule 40 PVC |
| D. Well casing diameter: | 2.0 in. |
| E. Well screen length: | 9.5 ft. |
| Well screen type: | Machine-slotted schedule 40 PVC |
| Well screen slot size: | 0.020 in. |
| F. Well sump/end cap length: | 0.8 ft. |
| G. Well casing height (stickup): | 2.5 ft. |
| H. Surface seal thickness: | 2.0 ft. |
| I. Surface seal material: | Concrete |
| J. Annular seal thickness: | 26.5 ft. |
| K. Annular seal material: | Bentonite chips |
| L. Filter pack seal thickness: | NA ft. |
| M. Filter pack seal material: | NA |
| N. Sand pack thickness: | 13.5 ft. |
| O. Sand pack material: | 10-20 graded silica sand |
| P. Bottom material thickness: | NA ft. |
| Q. Bottom material: | NA |
| R. Protective casing material: | Anodized aluminum |
| Well centralizer depths: | 31 & 41.5 ft. |
| S. Protective casing diameter: | 6.0 in. |

## NOTES:

Well elevations were not surveyed because of restricted access due to weather conditions. Elevations will be surveyed and submitted when available.

Installed by: Craig Fanshier

Reviewed by: Louis Caruso

Date: 12/6/96

P:\L:\DATA\0258-RIV\01\4WEL-D.D09\SAB:3

# LOG OF EXPLORATORY BORING

| | | | |
|---|---|---|---|
| PROJECT NAME | Riverbend Landfill - Sanifill | BORING NO. | MW-14B |
| LOCATION | McMinnville, Oregon | PAGE | 1 OF 3 |
| DRILLED BY | Geo-Tech Explorations, Inc. | GROUND ELEV. | |
| DRILL METHOD | Hollow Stem Auger | TOTAL DEPTH | 42.00' |
| LOGGED BY | Craig D. Fanshier | DATE COMPLETED | 10/19/96 |

| SAMPLE NUMBER (RECOVERY PERCENT) | SAMPLE TYPE | BLOW COUNTS (N COMP) | LITHOLOGIC DESCRIPTION |
|---|---|---|---|
| | | | **0 to 3.0 feet: SILTY CLAY (CL)**; dark brown; medium plasticity fines; damp. |
| | | | **3.0 to 15.0 feet: CLAYEY SILT (ML)**; brown with trace reddish mottling; low plasticity; medium stiff; damp. |
| S-1 (53) | SS1 | 2-4-4 (8) | |
| S-2 (66) | SS1 | 2-2-4 (8) | @ 10.0 feet: 0.2-foot thick layer with 85 to 90 percent medium plasticity fines; 10 to 15 percent fine sand; firm; damp. |
| S-3 (100) | SS1 | 1-1-0 (1) | **15.0 to 21.0 feet: SANDY SILT (ML)**; reddish brown; 70 percent medium plasticity fines; medium plasticity; 30 percent fine sand; very soft; moist. |
| | | | @ 17.0 feet: potential coarsening downward sequence. |

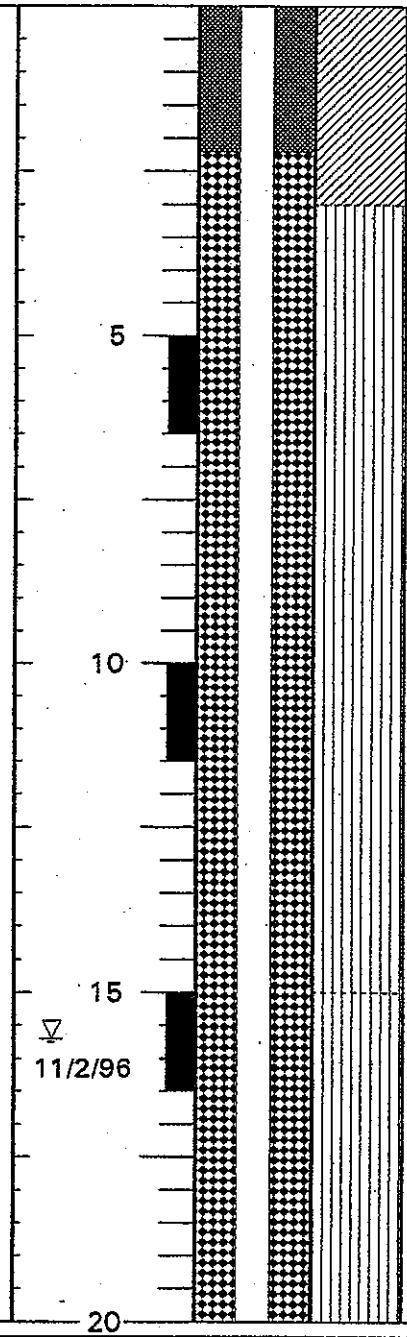


## REMARKS

Exploratory boring drilled with 10-inch OD (6.25-inch ID) hollow stem augers. Soil sampled with 1.4-inch (SS1) and 2.5-inch (SS2) ID, 1.5-foot-long split-spoon samplers. A 2-inch PVC monitoring well was constructed in the borehole. Well construction information is summarized on the attached well details. See explanation for definition of symbols.

EMCON

# LOG OF EXPLORATORY BORING

PROJECT NAME Riverbend Landfill - Sanifill
LOCATION McMinnville, Oregon
DRILLED BY Geo-Tech Explorations, Inc.
DRILL METHOD Hollow Stem Auger
LOGGED BY Craig D. Fanshier

BORING NO. MW-14B
PAGE 2 OF 3
GROUND ELEV.
TOTAL DEPTH 42.00'
DATE COMPLETED 10/19/96

| SAMPLE NUMBER (RECOVERY PERCENT) | SAMPLE TYPE | BLOW COUNTS (N COMP) |
|---|---|---|
| S-4 (100) | SS1 | 1-1-1 (2) |
| S-5 (100) | SS2 | 1-2-3 (5) |
| S-6 (100) | SS2 | 1-1-2 (3) |
| S-7 (100) | SS2 | 1-4-4 (8) |
| S-8 (100) | SS1 | 1-17-19 (36) |
| S-9 (66) | SS1 | 15-18-21 (39) |
| S-10 (53) | SS2 | 21-50/4" |
| S-11 (60) | SS2 | 30-50/3" |
| S-12 (60) | SS2 | 9-50/6" |
| S-13 (46) | SS2 | 11-50/2" |
| S-24 (33) | SS2 | 50/5" |
| S-15 (33) | SS2 | 50/5" |

GROUND WATER LEVELS: 10/14/96
DEPTH IN FEET: 25, 30, 35, 40
SAMPLES
WELL DETAILS
LITHOLOGIC COLUMN

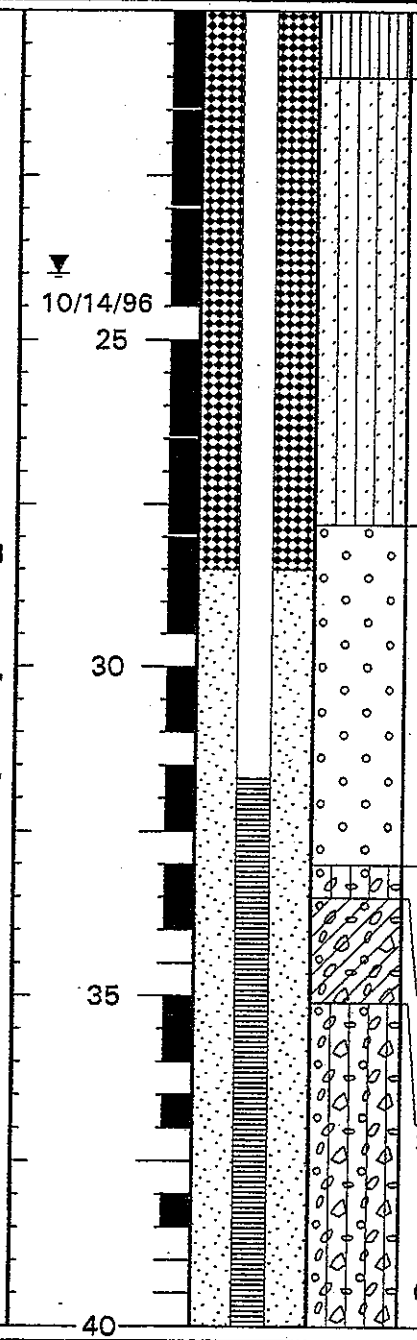

LITHOLOGIC DESCRIPTION

**15.0 to 21.0 feet: SANDY SILT (ML)**; continued.
@ 20.0 feet: 20 percent dark reddish brown mottling; 2 percent wood fragments.

**21.0 to 27.8 feet: SILTY SAND (SM)**; dark greenish gray with reddish mottling; 38 to 45 percent low plasticity fines; 55 to 60 percent fine sand; 2 percent wood fragments (1/4-inch-by 1-inch-diameter long, brown); very loose; moist.
@ 23.5 feet: grades to 25 percent fine, 70 percent fine to medium sand (F:M = 2:1) with 5 percent wood fragments; wet.
@ 24.0 to 27.8 feet: sand; reddish brown; 15 percent low plasticity fines; wet.

@ 27.5 to 27.8 feet: clayey silt.

**27.8 to 33.0 feet: SANDY GRAVEL (GP)**; greenish gray with some reddish brown mottling around gravel contacts; 5 percent medium to low plasticity fines; 20 to 30 percent fine to medium (F:M = 1:1); sand; 65 to 75 percent fine to medium gravel (subrounded); (bit blocked by 2.5-inches gravel); mostly basalt gravels in a silty sand matrix; dense; wet.
@ 31.0 feet: some sand and gravel heave in augers.

**33.0 to 33.5 feet: SILTY GRAVEL (GM)**; greenish gray; 30 percent low plasticity fines; 20 percent fine to medium sand; 50 percent 1/4 inch rounded gravel; dense; wet.

**33.5 to 35.1 feet: CLAYEY GRAVEL (GC)**; brown; 30 percent medium plasticity fines; 20 percent fine to medium sand; 50 percent gravel; dense; wet.

**35.1 to 42.0 feet: SILTY GRAVEL (GM)**; reddish brown; 15 to 25 percent low plasticity fines; 20 to 30 percent fine to medium sand (F:M =2:1); 55 percent fine gravel, subangular to subrounded; dense; wet.
@ 38.5 feet: several 1.5-inch rounded basalt

## REMARKS

Exploratory boring drilled with 10-inch OD (6.25-inch ID) hollow stem augers. Soil sampled with 1.4-inch (SS1) and 2.5-inch (SS2) ID, 1.5-foot-long split-spoon samplers. A 2-inch PVC monitoring well was constructed in the borehole. Well construction information is summarized on the attached well details. See explanation for definition of symbols.

EMCON

# LOG OF EXPLORATORY BORING

| | | | |
|---|---|---|---|
| PROJECT NAME | Riverbend Landfill - Sanifill | BORING NO. | MW-14B |
| LOCATION | McMinnville, Oregon | PAGE | 3 OF 3 |
| DRILLED BY | Geo-Tech Explorations, Inc. | GROUND ELEV. | |
| DRILL METHOD | Hollow Stem Auger | TOTAL DEPTH | 42.00' |
| LOGGED BY | Craig D. Fanshier | DATE COMPLETED | 10/19/96 |

| SAMPLE NUMBER (RECOVERY PERCENT) | SAMPLE TYPE | BLOW COUNTS (N COMP) | GROUND WATER LEVELS | DEPTH IN FEET | SAMPLES | WELL DETAILS | LITHOLOGIC COLUMN | LITHOLOGIC DESCRIPTION |
|---|---|---|---|---|---|---|---|---|
| S-16 | SS2 | 50/5" | | | | | | gravel. |
| | | | | | | | | Drilling terminated at 42.0 feet bgs. |

45

50

55

60

## REMARKS

Exploratory boring drilled with 10-inch OD (6.25-inch ID) hollow stem augers. Soil sampled with 1.4-inch (SS1) and 2.5-inch (SS2) ID, 1.5-foot-long split-spoon samplers. A 2-inch PVC monitoring well was constructed in the borehole. Well construction information is summarized on the attached well details. See explanation for definition of symbols.

EMCON

# WELL DETAILS

| | | | |
|---|---|---|---|
| Project Number: | 40258-001.053 | Boring/Well No.: | MW-15A |
| Client Name: | Riverbend Landfill | Top of Casing Elev.: | See note |
| Project Name: | Compliance Well Installation | Ground Surface Elev.: | See note |
| Location: | McMinnville, Oregon | Installation Date: | 10/21/96 |
| Driller: | Geo-Tech Explorations, Inc. | Permit/Start Card No.: | 93678 |

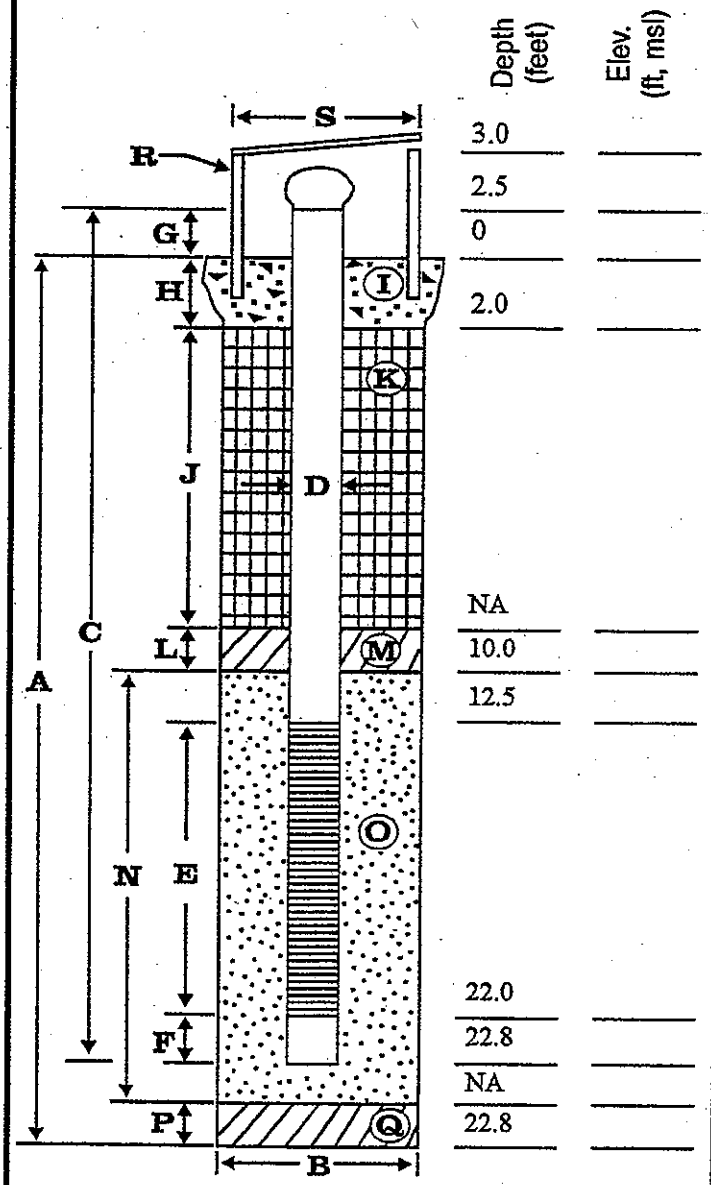


## EXPLORATORY BORING

| | |
|---|---|
| A. Total depth: | 22.8 ft. |
| B. Diameter | 13.8 in. to 9.2 ft.<br>10 in. to 22.8 ft. |
| Drilling method: | Hollow-stem auger |

## WELL CONSTRUCTION

| | |
|---|---|
| C. Well casing length: | 25.3 ft. |
| Well casing material: | Flush-threaded schedule 40 PVC |
| D. Well casing diameter: | 2.0 in. |
| E. Well screen length: | 9.5 ft. |
| Well screen type: | Machine-slotted schedule 40 PVC |
| Well screen slot size: | 0.010 in. |
| F. Well sump/end cap length: | 0.8 ft. |
| G. Well casing height (stickup): | 2.5 ft. |
| H. Surface seal thickness: | 2.0 ft. |
| I. Surface seal material: | Concrete |
| J. Annular seal thickness: | 8.0 ft. |
| K. Annular seal material: | Bentonite chips |
| L. Filter pack seal thickness: | NA ft. |
| M. Filter pack seal material: | NA |
| N. Sand pack thickness: | 12.8 ft. |
| O. Sand pack material: | 10-20 graded silica sand |
| P. Bottom material thickness: | NA ft. |
| Q. Bottom material: | NA |
| R. Protective casing material: | Anodized aluminum |
| Well centralizer depths: | 11.8 and 22 ft. |
| S. Protective casing diameter: | 6.0 in. |

## NOTES:

Well elevations were not surveyed because of restricted access due to weather conditions. Elevations will be surveyed and submitted when available.

Installed by: Craig Fanshier

Reviewed by: Louis Caruso

Date: 12/6/96

PL:\DATA\0258-RIV\01\5WEL-D.D09\SAB:3

# LOG OF EXPLORATORY BORING

| | | | |
|---|---|---|---|
| PROJECT NAME | Riverbend Landfill - Sanifill | BORING NO. | MW-15A |
| LOCATION | McMinnville, Oregon | PAGE | 1 OF 2 |
| DRILLED BY | Geo-Tech Explorations, Inc. | GROUND ELEV. | |
| DRILL METHOD | Hollow Stem Auger | TOTAL DEPTH | 22.80' |
| LOGGED BY | Craig D. Fanshier | DATE COMPLETED | 10/21/96 |

| SAMPLE NUMBER (RECOVERY PERCENT) | SAMPLE TYPE | BLOW COUNTS (N COMP) | GROUND WATER LEVELS | DEPTH IN FEET | SAMPLES | WELL DETAILS | LITHOLOGIC COLUMN | LITHOLOGIC DESCRIPTION |
|---|---|---|---|---|---|---|---|---|

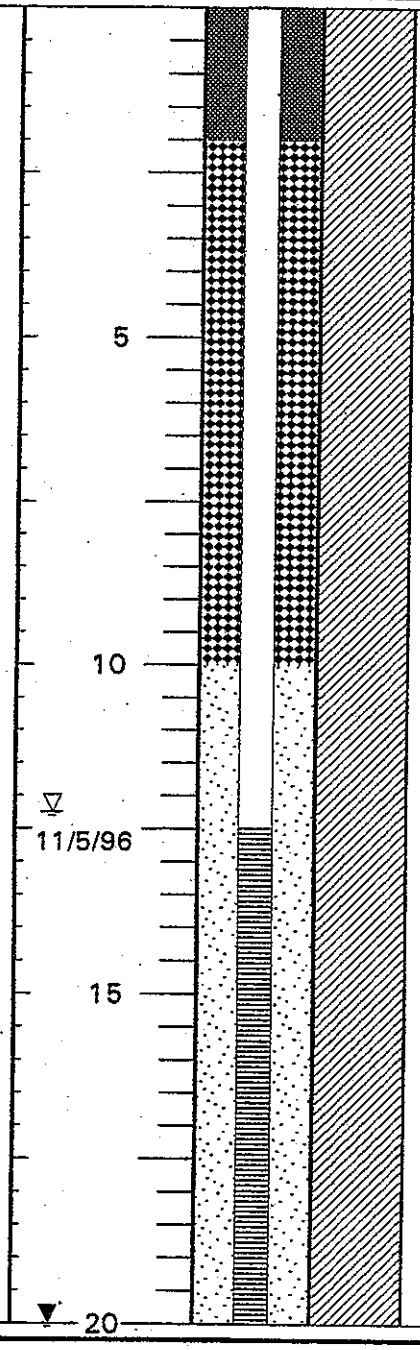


**0 to 20.0 feet: SILTY CLAY (CL)**; dark reddish brown; medium plasticity fines; damp.

@ 2.0 feet: changes to dark yellowish brown.

@ 5.0 feet: dark yellowish brown; with less than 10 percent gray mottling; stiff to very stiff.

@ 10.0 feet: several 1/16-inch diameter macropores with gray interior linings, many smaller macropores (0.1- to 0.2-mm diameter).

@ 15.0 feet: trace black organic material.

EMCON

## REMARKS

12-inch ID temporary surface casing was installed in a 14-inch diameter borehole drilled with HSA to approximately 9 feet. The annulus between the surface casing and the borehole was filled with bentonite. The exploratory boring was drilled through the surface casing with 10-inch OD (6.25-inch ID) hollow stem augers. Soil sampled with 1.4-inch (SS1) and 2.5-inch (SS2) ID, 1.5-foot-long split-spoon samplers. A 2-inch PVC monitoring well was constructed in the borehole. Well construction information is summarized on the attached well details. See explanation for definition of details.

# LOG OF EXPLORATORY BORING

| | | | |
|---|---|---|---|
| PROJECT NAME | Riverbend Landfill - Sanifill | BORING NO. | MW-15A |
| LOCATION | McMinnville, Oregon | PAGE | 2 OF 2 |
| DRILLED BY | Geo-Tech Explorations, Inc. | GROUND ELEV. | |
| DRILL METHOD | Hollow Stem Auger | TOTAL DEPTH | 22.80' |
| LOGGED BY | Craig D. Fanshier | DATE COMPLETED | 10/21/96 |

| SAMPLE NUMBER (RECOVERY PERCENT) | SAMPLE TYPE | BLOW COUNTS (N COMP) | GROUND WATER LEVELS | DEPTH IN FEET | SAMPLES | WELL DETAILS | LITHOLOGIC COLUMN | LITHOLOGIC DESCRIPTION |
|---|---|---|---|---|---|---|---|---|
| S-1 | SS1 | 6-13-23 (36) | 11/21/96 | 25, 30, 35, 40 | | | | **20.0 to 22.8 feet: SILTY CLAY (CL)**; dark greenish gray; trace brownish mottling; medium plasticity fines; stiff; moist; small blocky peds with weakly developed waxy surfaces small (1/16-inch) macropores; with water. |
| | | | | | | | | Drilling terminated at 22.8 feet bgs. |

EMCON

## REMARKS

12-inch ID temporary surface casing was installed in a 14-inch diameter borehole drilled with HSA to approximately 9 feet. The annulus between the surface casing and the borehole was filled with bentonite. The exploratory boring was drilled through the surface casing with 10-inch OD (6.25-inch ID) hollow stem augers. Soil sampled with 1.4-inch (SS1) and 2.5-inch (SS2) ID, 1.5-foot-long split-spoon samplers. A 2-inch PVC monitoring well was constructed in the borehole. Well construction information is summarized on the attached well details. See explanation for definition of details.

# WELL DETAILS

| | | | |
|---|---|---|---|
| Project Number: | 40258-001.053 | Boring/Well No.: | MW-15B |
| Client Name: | Riverbend Landfill | Top of Casing Elev.: | See note |
| Project Name: | Compliance Well Installation | Ground Surface Elev.: | See note |
| Location: | McMinnville, Oregon | Installation Date: | 10/21/96 |
| Driller: | Geo-Tech Explorations, Inc. | Permit/Start Card No.: | 93677 |

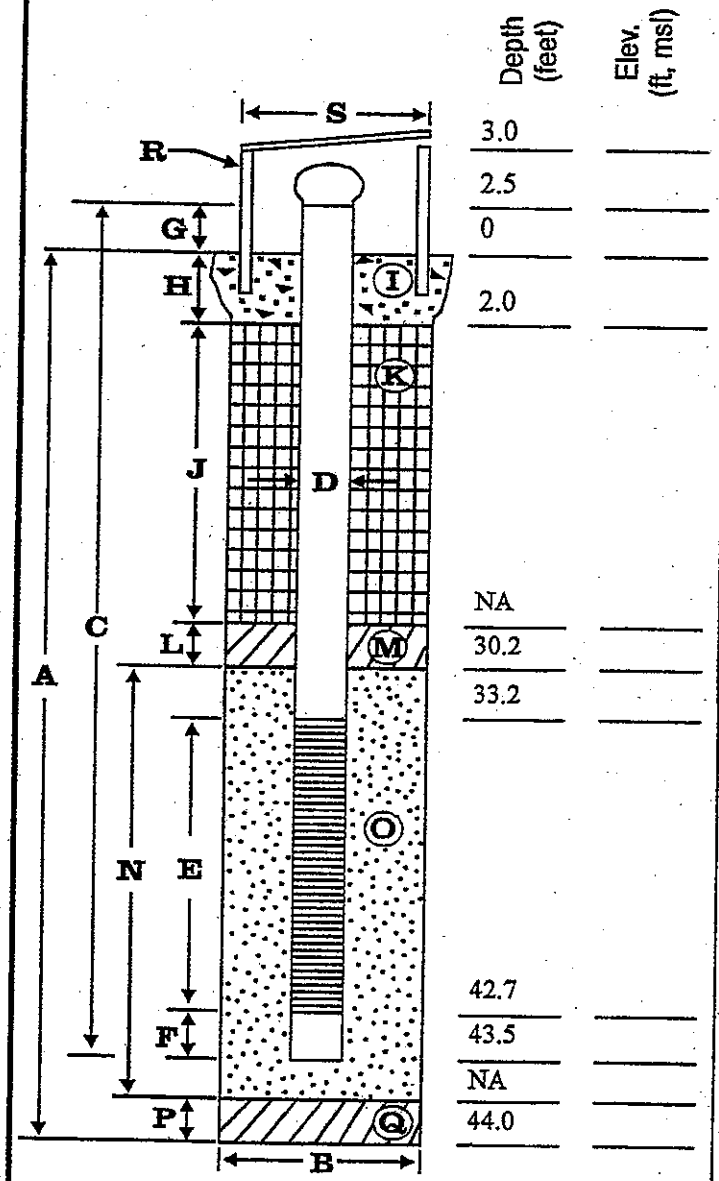


## EXPLORATORY BORING

| | |
|---|---|
| A. Total depth: | 44.0 ft. |
| B. Diameter | 13.8 in. to 9.5 ft.<br>10 in. to 44 ft. |
| Drilling method: | Hollow-stem auger |

## WELL CONSTRUCTION

| | |
|---|---|
| C. Well casing length: | 46.5 ft. |
| Well casing material: | Flush-threaded schedule 40 PVC |
| D. Well casing diameter: | 2.0 in. |
| E. Well screen length: | 9.5 ft. |
| Well screen type: | Machine-slotted schedule 40 PVC |
| Well screen slot size: | 0.020 in. |
| F. Well sump/end cap length: | 0.8 ft. |
| G. Well casing height (stickup): | 2.5 ft. |
| H. Surface seal thickness: | 2.0 ft. |
| I. Surface seal material: | Concrete |
| J. Annular seal thickness: | 28.2 ft. |
| K. Annular seal material: | Bentonite chips |
| L. Filter pack seal thickness: | NA ft. |
| M. Filter pack seal material: | NA |
| N. Sand pack thickness: | 13.8 ft. |
| O. Sand pack material: | 10-20 graded silica sand |
| P. Bottom material thickness: | NA ft. |
| Q. Bottom material: | NA |
| R. Protective casing material: | Anodized aluminum |
| Well centralizer depths: | 32.1 and 43 ft. |
| S. Protective casing diameter: | 6.0 in. |

Installed by: Craig Fanshier

Reviewed by: Louis Caruso

Date: 12/6/96

## NOTES:

Well elevations were not surveyed because of restricted access due to weather conditions. Elevations will be surveyed and submitted when available.

P\L:\DATA\0258-RIV\01\6WEL-D.D09\SAB:3

# LOG OF EXPLORATORY BORING

| | | | |
|---|---|---|---|
| PROJECT NAME | Riverbend Landfill - Sanifill | BORING NO. | MW-15B |
| LOCATION | McMinnville, Oregon | PAGE | 1 OF 3 |
| DRILLED BY | Geo-Tech Explorations, Inc. | GROUND ELEV. | |
| DRILL METHOD | Hollow Stem Auger | TOTAL DEPTH | 44.00' |
| LOGGED BY | Craig D. Fanshier | DATE COMPLETED | 10/18/96 |

| SAMPLE NUMBER (RECOVERY PERCENT) | SAMPLE TYPE | BLOW COUNTS (N COMP) | LITHOLOGIC DESCRIPTION |
|---|---|---|---|
| S-1 | Grab | 6-13-23 (36) | **0 to 20.0 feet: SILTY CLAY (CL)**; dark reddish brown; medium plasticity fines; damp. |
| S-2 | Grab | | @ 2.0 feet: changes to dark yellowish brown. |
| S-3 (100) | SS1 | 4-6-9 (15) | @ 5.0 feet: dark yellowish brown; with less than 10 percent gray mottling; stiff to very stiff. |
| S-4 (100) | SS1 | 2-5-7 (12) | @ 10.0 feet: several 1/16-inch diameter macro pores with gray interior linings, many smaller macro pores (0.1- to 0.2-mm diameter). |
| S-5 (100) | SS1 | 5-9-12 (21) | @ 15.0 feet: trace black organic material. |

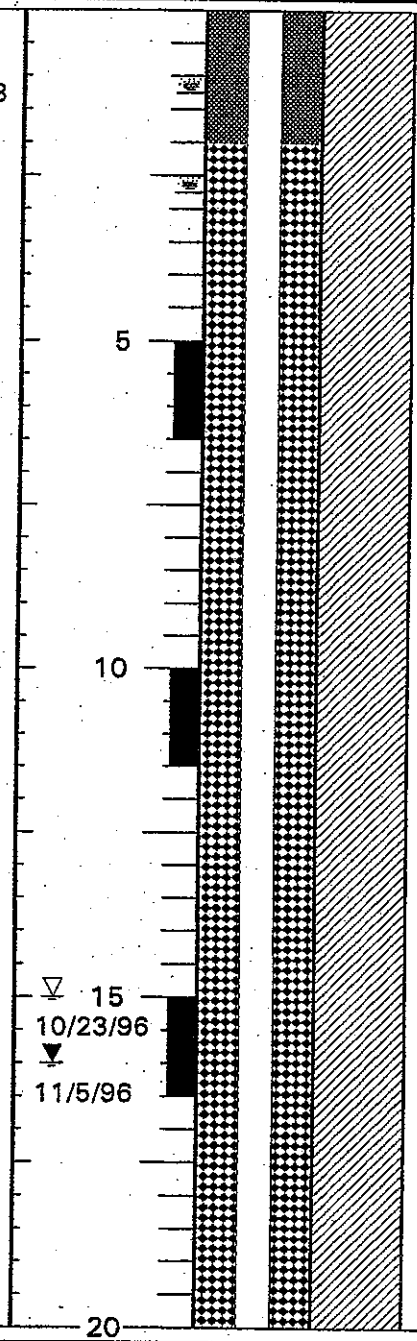


## REMARKS

12-inch ID temporary surface casing was installed in a 14-inch diameter borehole drilled with HSA to approximately 9 feet. The annulus between the surface casing and the borehole was filled with bentonite. The exploratory boring was drilled through the surface casing with 10-inch OD (6.25-inch ID) hollow stem augers. Soil sampled with 1.4-inch (SS1) and 2.5-inch (SS2) ID, 1.5-foot-long split-spoon samplers. A 2-inch PVC monitoring well was constructed in the borehole. Well construction information is summarized on the attached well details. See explanation for definition of details.

EMCON

# LOG OF EXPLORATORY BORING

| | | | |
|---|---|---|---|
| PROJECT NAME | Riverbend Landfill - Sanifill | BORING NO. | MW-15B |
| LOCATION | McMinnville, Oregon | PAGE | 2 OF 3 |
| DRILLED BY | Geo-Tech Explorations, Inc. | GROUND ELEV. | |
| DRILL METHOD | Hollow Stem Auger | TOTAL DEPTH | 44.00' |
| LOGGED BY | Craig D. Fanshier | DATE COMPLETED | 10/18/96 |

| SAMPLE NUMBER (RECOVERY PERCENT) | SAMPLE TYPE | BLOW COUNTS (N COMP) | LITHOLOGIC DESCRIPTION |
|---|---|---|---|
| S-6 (73) | SS1 | 5-8-12 (20) | **20.0 to 25.2 feet: SILTY CLAY (CL)**; dark greenish gray; trace brownish mottling; medium plasticity fines; stiff; moist; small blocky peds with weakly developed waxy surfaces small (1/16-inch) macropores; with water. |
| S-7 (100) | SS2 | 3-4-6 (10) | **25.2 to 29.5 feet: SANDY SILT (ML)**; brown, 20 percent gray mottling; 55 percent low plasticity fines; 45 percent fine sand, subangular to angular; firm; wet. Large macropores with wet interiors; silt content varies from approximately 55 to 65 percent with gradational silty sand layers 0.1 to 0.3-feet thick. |
| S-8 (100) | SS1 | 2-2-3 (5) | @ 29.5 feet: driller notes slightly rougher drilling, possibly gravels. |
| S-9 (67) | SS2 | 21-50/5" | **29.5 to 34.0 feet: SANDY GRAVEL (GP)**; brown; 10 percent nonplastic fines; 30 percent fine to medium sands (F:M = 2:1); 60 percent fine gravels; very dense; wet. |
| S-10 (73) | SS1 | 26-21-23 (44) | |
| S-11 (80) | SS2 | 8-23-39 (62) | **34.0 to 42.0 feet: SILTY GRAVEL (GM)**; dark yellowish brown; 15 percent nonplastic fines; 25 to 35 percent fine to coarse sand (F:M:C = 3:3:1); 50 to 60 percent fine (3/8 inch to 1/2 inch) rounded to subrounded gravels; dense; wet. |

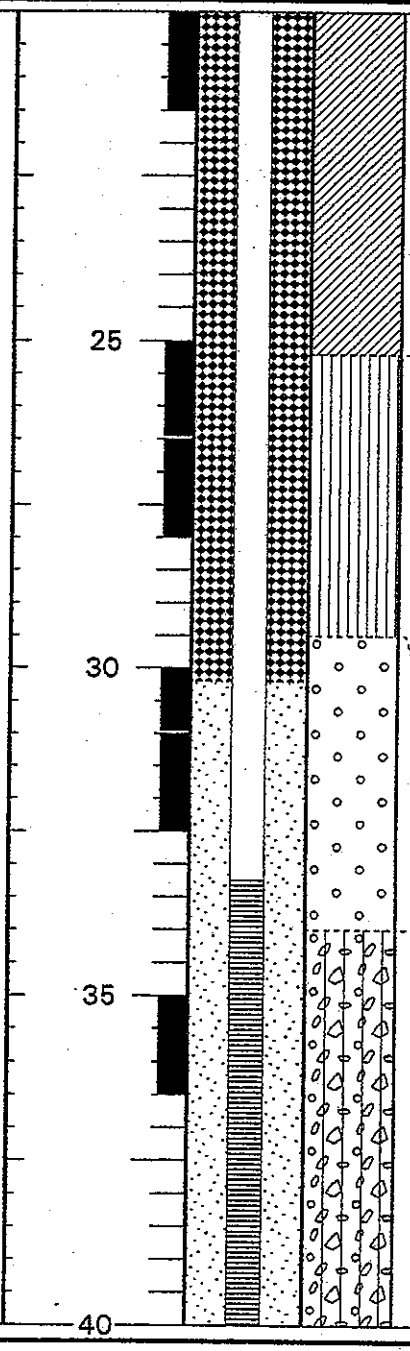


## REMARKS

12-inch ID temporary surface casing was installed in a 14-inch diameter borehole drilled with HSA to approximately 9 feet. The annulus between the surface casing and the borehole was filled with bentonite. The exploratory boring was drilled through the surface casing with 10-inch OD (6.25-inch ID) hollow stem augers. Soil sampled with 1.4-inch (SS1) and 2.5-inch (SS2) ID, 1.5-foot-long split-spoon samplers. A 2-inch PVC monitoring well was constructed in the borehole. Well construction information is summarized on the attached well details. See explanation for definition of details.

EMCON

# LOG OF EXPLORATORY BORING

| | | | |
|---|---|---|---|
| PROJECT NAME | Riverbend Landfill - Sanifill | BORING NO. | MW-15B |
| LOCATION | McMinnville, Oregon | PAGE | 3 OF 3 |
| DRILLED BY | Geo-Tech Explorations, Inc. | GROUND ELEV. | |
| DRILL METHOD | Hollow Stem Auger | TOTAL DEPTH | 44.00' |
| LOGGED BY | Craig D. Fanshier | DATE COMPLETED | 10/18/96 |

| SAMPLE NUMBER (RECOVERY PERCENT) | SAMPLE TYPE | BLOW COUNTS (N COMP) | LITHOLOGIC DESCRIPTION |
|---|---|---|---|
| S-12 (80) | SS1 | 6-21-45 (66) | **34.0 to 42.0 feet: SILTY GRAVEL (GM);** continued. |
| S-13 | SS1 | 16-28-50/5.5" (78+) | **42.0 to 44.0 feet: SILTY SAND (SM);** dark greenish gray; 20 to 30 percent non to low plasticity fines; 78 percent fine to medium sand (F:M = 3:1); 2 percent fine (3/8 to 1/2 inch) rounded gravels; very dense; moist to wet. Fines act as a matrix binding the sand together. |
| | | | Drilling terminated at 44.0 feet bgs. |

GROUND WATER LEVELS | DEPTH IN FEET | SAMPLES | WELL DETAILS | LITHOLOGIC COLUMN

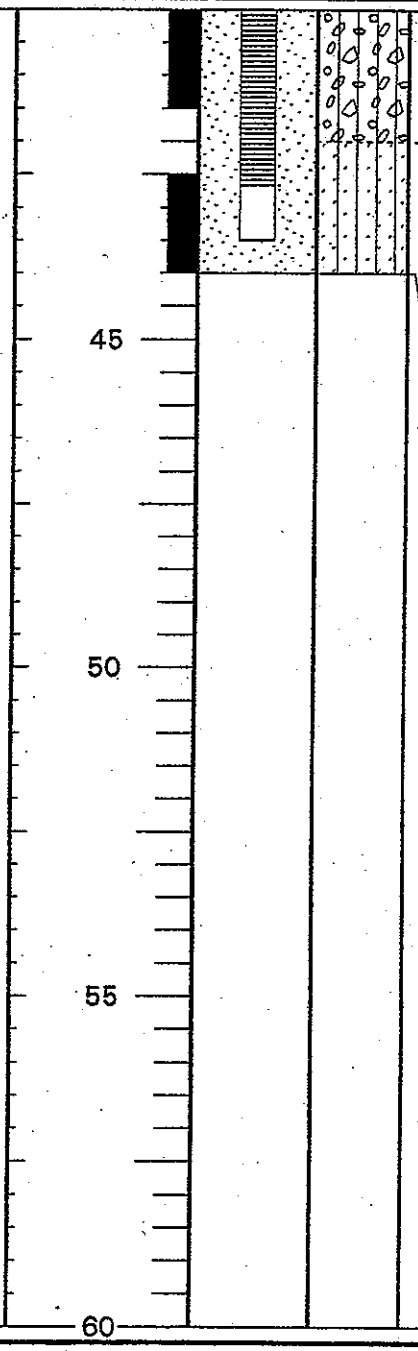


## REMARKS

12-inch ID temporary surface casing was installed in a 14-inch diameter borehole drilled with HSA to approximately 9 feet. The annulus between the surface casing and the borehole was filled with bentonite. The exploratory boring was drilled through the surface casing with 10-inch OD (6.25-inch ID) hollow stem augers. Soil sampled with 1.4-inch (SS1) and 2.5-inch (SS2) ID, 1.5-foot-long split-spoon samplers. A 2-inch PVC monitoring well was constructed in the borehole. Well construction information is summarized on the attached well details. See explanation for definition of details.

EMCON

# WELL DETAILS

| | | | |
|---|---|---|---|
| Project Number: | 40258-001.053 | Boring/Well No.: | MW-16A |
| Client Name: | Riverbend Landfill | Top of Casing Elev.: | See note |
| Project Name: | Compliance Well Installation | Ground Surface Elev.: | See note |
| Location: | McMinnville, Oregon | Installation Date: | 10/23/96 |
| Driller: | Geo-Tech Explorations, Inc. | Permit/Start Card No.: | 93680 |

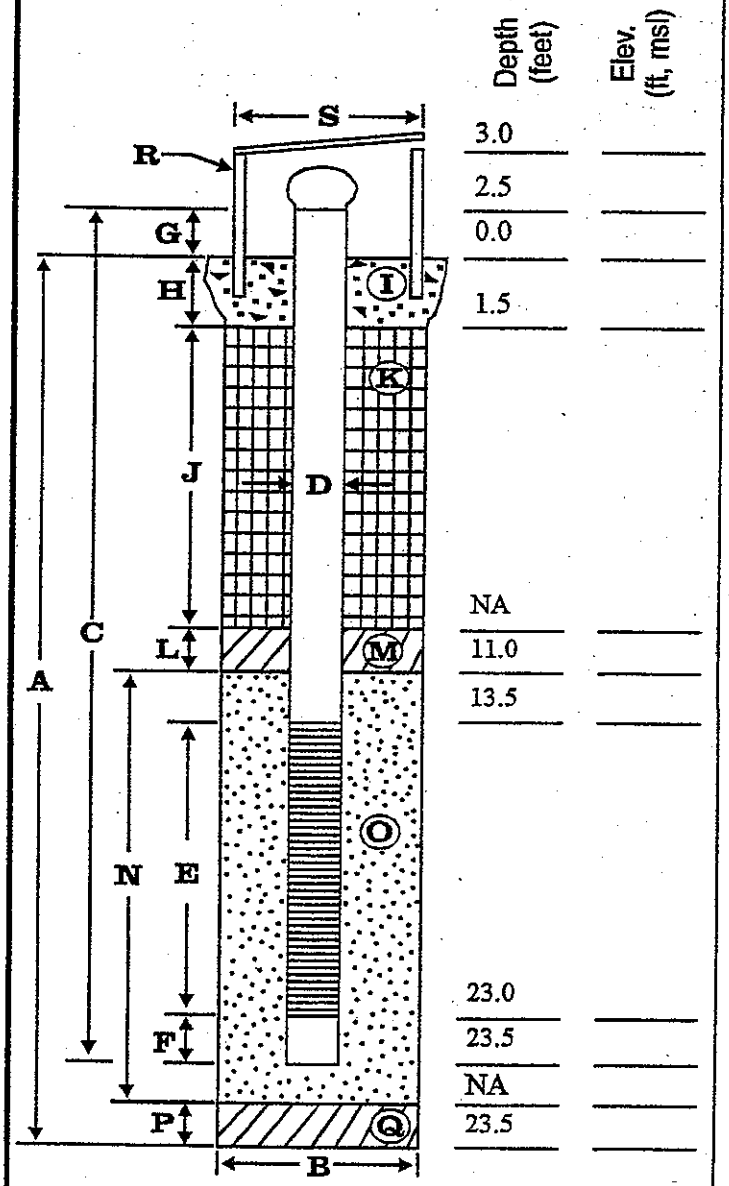


## EXPLORATORY BORING

| | |
|---|---|
| A. Total depth: | 23.5 ft. |
| B. Diameter | 10.0 in. |
| Drilling method: | Hollow-stem auger |

## WELL CONSTRUCTION

| | |
|---|---|
| C. Well casing length: | 26.0 ft. |
| Well casing material: | Flush-threaded schedule 40 PVC |
| D. Well casing diameter: | 2.0 in. |
| E. Well screen length: | 9.5 ft. |
| Well screen type: | Machine-slotted schedule 40 PVC |
| Well screen slot size: | 0.010 in. |
| F. Well sump/end cap length: | 0.8 ft. |
| G. Well casing height (stickup): | 2.5 ft. |
| H. Surface seal thickness: | 2.0 ft. |
| I. Surface seal material: | Concrete |
| J. Annular seal thickness: | 9.5 ft. |
| K. Annular seal material: | Bentonite chips |
| L. Filter pack seal thickness: | NA ft. |
| M. Filter pack seal material: | NA |
| N. Sand pack thickness: | 12.5 ft. |
| O. Sand pack material: | 10-20 graded silica sand |
| P. Bottom material thickness: | NA ft. |
| Q. Bottom material: | NA |
| R. Protective casing material: | Anodized aluminum |
| Well centralizer depths: | 12.8 and 23.0 ft. |
| S. Protective casing diameter: | 6.0 in. |

Installed by: Craig Fanshier

Reviewed by: Louis Caruso

Date: 12/6/96

## NOTES:

Well elevations were not surveyed because of restricted access due to weather conditions. Elevations will be surveyed and submitted when available.

P:\L:\DATA\0258-RIV\01\7WEL-D.D09\SAB:3

# LOG OF EXPLORATORY BORING

PROJECT NAME **Riverbend Landfill - Sanifill**
LOCATION **McMinnville, Oregon**
DRILLED BY **Geo-Tech Explorations, Inc.**
DRILL METHOD **Hollow Stem Auger**
LOGGED BY **Craig D. Fanshier**

BORING NO. **MW-16A**
PAGE **1 OF 2**
GROUND ELEV.
TOTAL DEPTH **23.50'**
DATE COMPLETED **10/23/96**

| SAMPLE NUMBER (RECOVERY PERCENT) | SAMPLE TYPE | BLOW COUNTS (N COMP) | GROUND WATER LEVELS | DEPTH IN FEET | SAMPLES | WELL DETAILS | LITHOLOGIC COLUMN | LITHOLOGIC DESCRIPTION |
|---|---|---|---|---|---|---|---|---|
| S-1 | SS1 | 3-7-8-14 | 10/23 ▼ 11/5 | 5, 10, 15, 20 | | | | **0 to 25.0 feet: SILTY CLAY (CL);** yellowish red with 20 to 40 percent gray mottling; medium plasticity fines; very stiff; damp; some very small macropores (less than 0.2 mm in diameter).<br>@ 1.5 feet: color changes from dark brown to brown to yellowish red. |

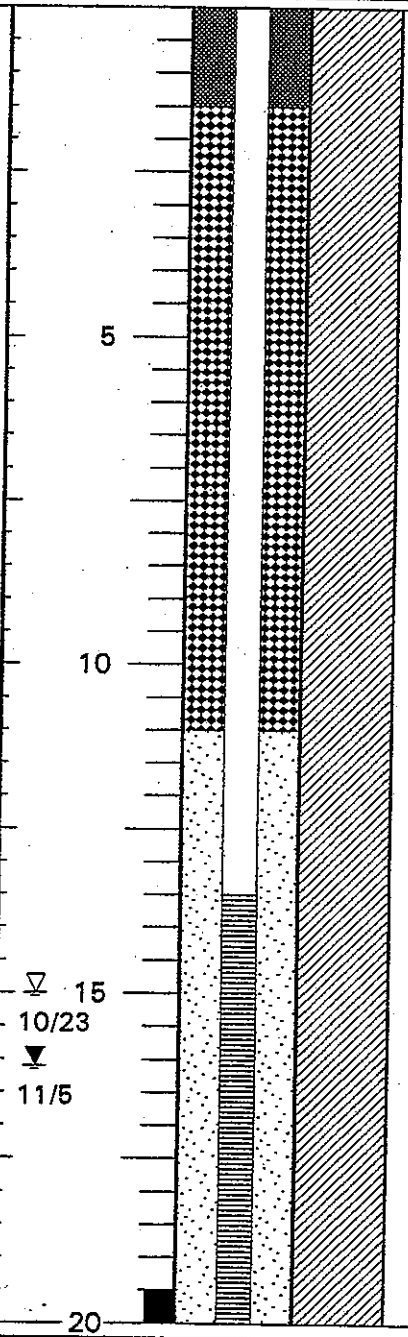

## REMARKS

Exploratory boring drilled with 10-inch OD (6.25-inch ID) hollow stem augers. Soil sampled with 1.4-inch (SS1) ID 1.5-foot-long split-spoon samplers. Additional lithologic detail was provided from samples collected from the deeper boring approximately 8-feet away. A 2-inch PVC monitoring well was constructed in the borehole. Well construction information is summarized on the attached well details. 12-inch ID temporary surface casing was installed in a 14-inch diameter borehole drilled with HSA to approximately 9 feet. The annulus between the surface casing and the borehole was filled with bentonite.

EMCON

# LOG OF EXPLORATORY BORING

PROJECT NAME **Riverbend Landfill - Sanifill**
LOCATION **McMinnville, Oregon**
DRILLED BY **Geo-Tech Explorations, Inc.**
DRILL METHOD **Hollow Stem Auger**
LOGGED BY **Craig D. Fanshier**

BORING NO. **MW-16A**
PAGE **2 OF 2**
GROUND ELEV.
TOTAL DEPTH **23.50'**
DATE COMPLETED **10/23/96**

| SAMPLE NUMBER (RECOVERY PERCENT) | SAMPLE TYPE | BLOW COUNTS (N COMP) | GROUND WATER LEVELS | DEPTH IN FEET | SAMPLES | WELL DETAILS | LITHOLOGIC COLUMN | LITHOLOGIC DESCRIPTION |
|---|---|---|---|---|---|---|---|---|
| (100) | | (15) | | 25 30 35 40 | | | | **0 to 25.0 feet: SILTY CLAY (CL)**; continued.<br>@ 20.0 feet: several small macropores with water, pores are light gray.<br><br>@ 22.0 to 23.5 feet: firm drilling, green clay returns.<br><br>Drilling terminated at 23.5 feet. |

## REMARKS

Exploratory boring drilled with 10-inch OD (6.25-inch ID) hollow stem augers. Soil sampled with 1.4-inch (SS1) ID 1.5-foot-long split-spoon samplers. Additional lithologic detail was provided from samples collected from the deeper boring approximately 8-feet away. A 2-inch PVC monitoring well was constructed in the borehole. Well construction information is summarized on the attached well details. 12-inch ID temporary surface casing was installed in a 14-inch diameter borehole drilled with HSA to approximately 9 feet. The annulus between the surface casing and the borehole was filled with bentonite.

EMCON

# WELL DETAILS

| | | | |
|---|---|---|---|
| Project Number: | 40258-001.053 | Boring/Well No.: | MW-16B |
| Client Name: | Riverbend Landfill | Top of Casing Elev.: | See note |
| Project Name: | Compliance Well Installation | Ground Surface Elev.: | See note |
| Location: | McMinnville, Oregon | Installation Date: | 10/23/96 |
| Driller: | Geo-Tech Explorations, Inc. | Permit/Start Card No.: | 93679 |

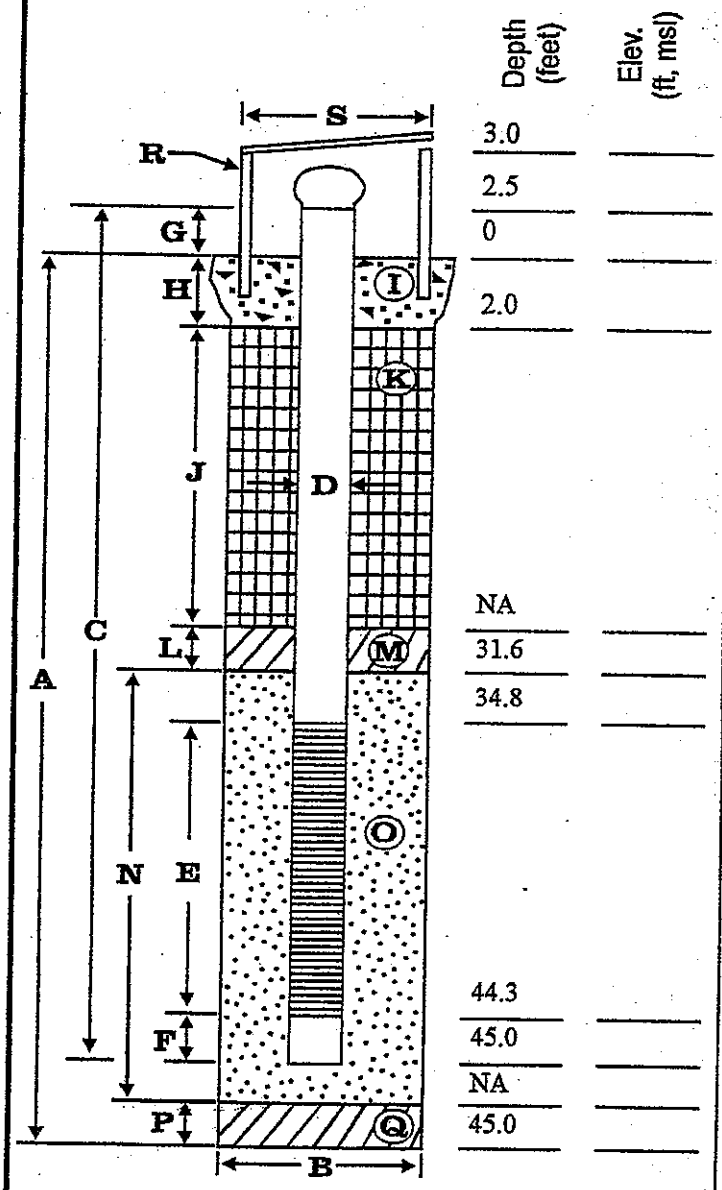


Installed by: Craig Fanshier

Reviewed by: Louis Caruso

Date: 12/6/96

## EXPLORATORY BORING

| | |
|---|---|
| A. Total depth: | 45.0 ft. |
| B. Diameter | 10.0 in. |
| Drilling method: | Hollow-stem auger |

## WELL CONSTRUCTION

| | |
|---|---|
| C. Well casing length: | 47.5 ft. |
| Well casing material: | Flush-threaded schedule 40 PVC |
| D. Well casing diameter: | 2.0 in. |
| E. Well screen length: | 9.5 ft. |
| Well screen type: | Machine-slotted schedule 40 PVC |
| Well screen slot size: | 0.020 in. |
| F. Well sump/end cap length: | 0.8 ft. |
| G. Well casing height (stickup): | 2.5 ft. |
| H. Surface seal thickness: | 2.0 ft. |
| I. Surface seal material: | Concrete |
| J. Annular seal thickness: | 13.4 ft. |
| K. Annular seal material: | Bentonite chips |
| L. Filter pack seal thickness: | NA ft. |
| M. Filter pack seal material: | NA |
| N. Sand pack thickness: | 13.4 ft. |
| O. Sand pack material: | 10-20 graded silica sand |
| P. Bottom material thickness: | NA ft. |
| Q. Bottom material: | NA |
| R. Protective casing material: | Anodized aluminum |
| Well centralizer depths: | 34.0 and 44.5 ft. |
| S. Protective casing diameter: | 6.0 in. |

## NOTES:

Well elevations were not surveyed because of restricted access due to weather conditions. Elevations will be surveyed and submitted when available.

P\L:\DATA\0258-RIV\01\8WEL-D.D09\SAB:3

# LOG OF EXPLORATORY BORING

| | | | |
|---|---|---|---|
| PROJECT NAME | **Riverbend Landfill - Sanifill** | BORING NO. | **MW-16B** |
| LOCATION | **McMinnville, Oregon** | PAGE | **1 OF 3** |
| DRILLED BY | **Geo-Tech Explorations, Inc.** | GROUND ELEV. | |
| DRILL METHOD | **Hollow Stem Auger** | TOTAL DEPTH | **46.00'** |
| LOGGED BY | **Craig D. Fanshier** | DATE COMPLETED | **10/22/96** |

| SAMPLE NUMBER (RECOVERY PERCENT) | SAMPLE TYPE | BLOW COUNTS (N COMP) | GROUND WATER LEVELS | DEPTH IN FEET | SAMPLES | WELL DETAILS | LITHOLOGIC COLUMN | LITHOLOGIC DESCRIPTION |
|---|---|---|---|---|---|---|---|---|
| S-1 (100) | SS1 | 4-8-13 (21) | | 5 | | | | **0 to 25.0 feet: SILTY CLAY (CL)**; yellowish red with 20 to 40 percent gray mottling; medium plasticity fines; very stiff; damp; some very small macropores (less than 0.2 mm in diameter).<br>@ 1.5 feet: color changes from dark brown to brown to yellowish red. |
| S-2 (100) | SS1 | 8-9-12 (21) | | 10 | | | | |
| S-3 | SS1 | 7-9-13 (21) | ▽ 10/23/96<br>▼ 11/5/96 | 15 | | | | @ 16.1 feet: brownish-organic looking inclusion 2- by 1/4-inch mottle.<br>@ 16.2 feet: change to dark greenish gray; wet; with 30 percent dark brown mottling. |
| | | | | 20 | | | | |

EMCON

## REMARKS

12-inch ID temporary surface casing was installed in a 14-inch diameter borehole drilled with HSA to approximately 9 feet. The annulus between the surface casing and the borehole was filled with bentonite. The exploratory boring was drilled through the surface casing with 10-inch OD (6.25-inch ID) hollow stem augers. Soil sampled with 1.4-inch (SS1) and 2.5-inch (SS2) ID, 1.5-foot-long split-spoon samplers. A 2-inch PVC monitoring well was constructed in the borehole. Well construction information is summarized on the attached well details.

# LOG OF EXPLORATORY BORING

| | | | |
|---|---|---|---|
| PROJECT NAME | Riverbend Landfill - Sanifill | BORING NO. | MW-16B |
| LOCATION | McMinnville, Oregon | PAGE | 2 OF 3 |
| DRILLED BY | Geo-Tech Explorations, Inc. | GROUND ELEV. | |
| DRILL METHOD | Hollow Stem Auger | TOTAL DEPTH | 46.00' |
| LOGGED BY | Craig D. Fanshier | DATE COMPLETED | 10/22/96 |

| SAMPLE NUMBER (RECOVERY PERCENT) | SAMPLE TYPE | BLOW COUNTS (N COMP) | LITHOLOGIC DESCRIPTION |
|---|---|---|---|
| S-4 (100) | SS1 | 4-7-9 (16) | **0 to 25.0 feet: SILTY CLAY (CL)**; continued.<br>@ 20.0 feet: several small macro pores with water, pores are light gray.<br><br>@ 22.0 to 24.0 feet: firm drilling, green clay returns. |
| S-5 (100) | SS1 | 2-2-3 (5) | **25.0 to 25.5 feet: CLAYEY SILT (ML)**; gradational to unit below; soft; wet.<br>@ 26.0 feet: driller notes softer drilling.<br>**25.5 to 30.0 feet: SANDY SILT (ML)**; olive brown; 85 percent low plasticity fines; 15 percent fine sand; firm; wet. |
| S-6 (100) | SS1 | 1-2-2 (4) | **30.0 to 32.5 feet: SILTY SAND (SP) with layers of SANDY SILT (ML)**; silty sand is dark yellowish brown; 20 percent low plasticity fines; 80 percent fine to medium sand (F:M = 1:2); wet; some reddish brown and gray mottling in the sandy silt layers (approximately 0.2- to 0.5-feet thick). |
| S-7 (0.5) | SS1 | 8-23-26 (45) | **32.5 to 40.0 feet: SANDY GRAVEL (GP)**; dark yellowish brown; 10 percent nonplastic fines; 20 to 30 percent medium to coarse angular sand (M:C = 2:1); 60 to 70 percent fine gravel (1/4- to 1/2-inch, mostly 1/4- to 3/8-inch); very dense; wet.<br><br>@ 36.5 to 40.0 feet: driller notes coarse gravel; looser; drilled faster. |

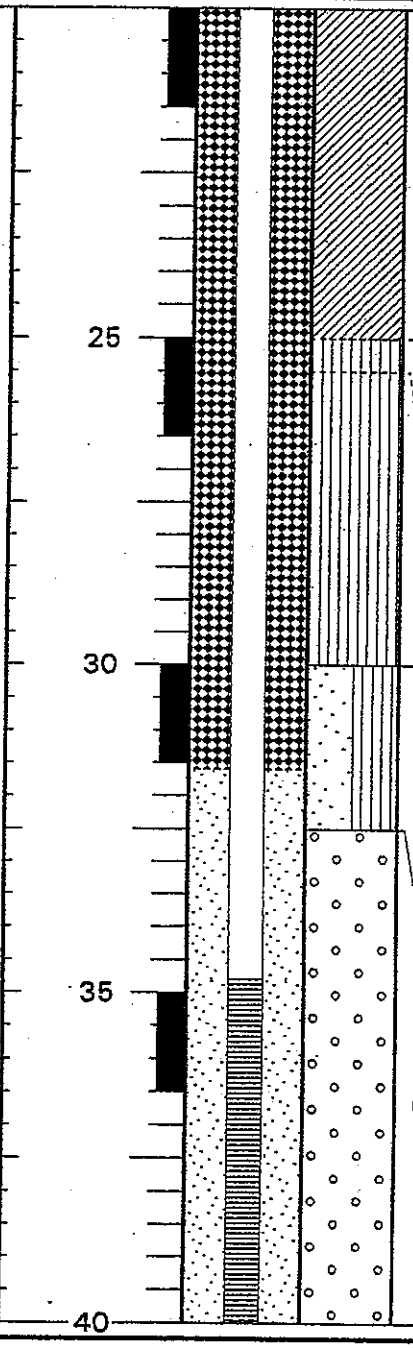


## REMARKS

12-inch ID temporary surface casing was installed in a 14-inch diameter borehole drilled with HSA to approximately 9 feet. The annulus between the surface casing and the borehole was filled with bentonite. The exploratory boring was drilled through the surface casing with 10-inch OD (6.25-inch ID) hollow stem augers. Soil sampled with 1.4-inch (SS1) and 2.5-inch (SS2) ID, 1.5-foot-long split-spoon samplers. A 2-inch PVC monitoring well was constructed in the borehole. Well construction information is summarized on the attached well details.

EMCON

# LOG OF EXPLORATORY BORING

| | | | |
|---|---|---|---|
| PROJECT NAME | Riverbend Landfill - Sanifill | BORING NO. | MW-16B |
| LOCATION | McMinnville, Oregon | PAGE | 3 OF 3 |
| DRILLED BY | Geo-Tech Explorations, Inc. | GROUND ELEV. | |
| DRILL METHOD | Hollow Stem Auger | TOTAL DEPTH | 46.00' |
| LOGGED BY | Craig D. Fanshier | DATE COMPLETED | 10/22/96 |

| SAMPLE NUMBER (RECOVERY PERCENT) | SAMPLE TYPE | BLOW COUNTS (N COMP) | GROUND WATER LEVELS | DEPTH IN FEET | SAMPLES | WELL DETAILS | LITHOLOGIC COLUMN | LITHOLOGIC DESCRIPTION |
|---|---|---|---|---|---|---|---|---|
| S-8 (1.0) | SS2 | 7-50/6" | | 45 | | | | **40.0 to 45.0 feet: SANDY GRAVEL (GP)**; dark greenish gray; 10 percent low plasticity fines; 30 percent fine to medium sand; 60 percent fine gravels (3/8- to 3/4-inch gravels); dense; wet. |
| S-9 (1.0) | SS1 | 21-15 | | 50 | | | | Drilling terminated at 45.0 feet. |
| | | | | 55 | | | | |
| | | | | 60 | | | | |

## REMARKS

12-inch ID temporary surface casing was installed in a 14-inch diameter borehole drilled with HSA to approximately 9 feet. The annulus between the surface casing and the borehole was filled with bentonite. The exploratory boring was drilled through the surface casing with 10-inch OD (6.25-inch ID) hollow stem augers. Soil sampled with 1.4-inch (SS1) and 2.5-inch (SS2) ID, 1.5-foot-long split-spoon samplers. A 2-inch PVC monitoring well was constructed in the borehole. Well construction information is summarized on the attached well details.

EMCON

CH2MHILL

| PROJECT NUMBER | BORING NUMBER | |
|---|---|---|
| 159636.A0.03 | MW-17A (L40373) | SHEET 1 OF 1 |

# WELL COMPLETION DIAGRAM

PROJECT: Riverbend Landfill LOCATION: McMinnville, Oregon Installation date(s): 09/25/2000

ELEVATION: 151.12 ft msl DRILLING CONTRACTOR: Geo-Tech Explorations, Inc.

DRILLING METHOD AND EQUIPMENT USED: B-59 Mobile Hollow-Stem Auger (6.25" ID)

WATER LEVELS: START: 8:30 END: 10:30 LOGGER: B. Long

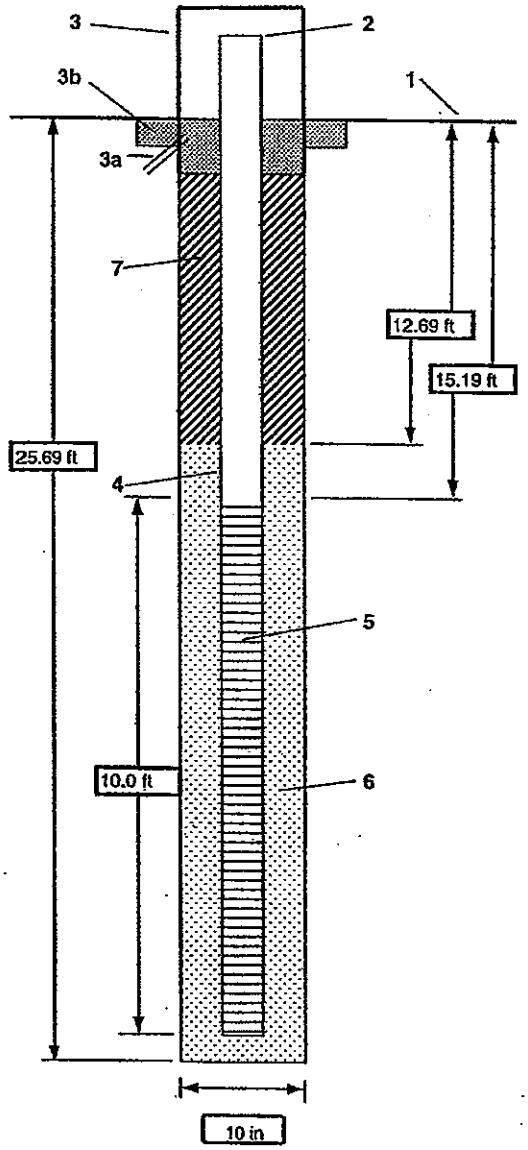


1- Ground elevation at well: 151.12 ft msl

2- Top of casing elevation: 153.83 ft msl

3- Wellhead protection cover type: Above-ground monument
- a) drain tube? No
- b) concrete pad dimensions: Approx 2' x 2'

4- Diameter/type of well casing: 2" Sch. 40 PVC

5- Type/slot size of screen: 2" Sch.40 PVC / 0.010 slot

6- Type screen filter: Silica sand (10-20)
- a) Quantity used: 8-50 lb bags

7- Type of seal: Medium bentonite chips
- a) Quantity used: 8-50 lb bags
- b) Top of seal: Concrete

Development method: Pump & surge

Development time: Approx. 5 hours

Estimated purge volume: 448 gallons

Comments: Well screen length is nominal; actual screened portion is approx. 1 foot shorter than labeled length

CH2MHILL

BORING NUMBER
MW-17A

SHEET 1 of 1

# SOIL BORING LOG

PROJECT : Riverbend Landfill | LOCATION : McMinnville, Oregon | DATE: 09/25/2000

ELEVATION : 151.12 ft msl | DRILLING CONTRACTOR: Geo-Tech Explorations, Inc.

DRILLING METHOD : HSA-6.25 ID Hollow-Stem Auger

WATER LEVELS : | START : 8:30 | END: 10:30 am | LOGGER : R.E.Long

| DEPTH BELOW SURFACE (FT) | SAMPLE No. | GRAPHIC LOG | SOIL DESCRIPTION<br>SOIL NAME, USCS GROUP SYMBOL, COLOR, MOISTURE CONTENT, RELATIVE DENSITY OR CONSISTENCY, SOIL STRUCTURE, MINERALOGY. | COMMENTS |
|---|---|---|---|---|
| | | | Sandy SILT (ML); reddish-brown; moist; medium stiff; low plasticity; nonstratified; macropores, some rootlets | |
| 5 | | | Sandy SILT with 10-15% clay (ML); dark reddish-brown to brown; moist; medium stiff; low plasticity; nonstratified; macropores | |
| 10 | | ML | SILT w/very fine sand, clay (15+ %) (ML); lt brown to tan; mottled from 8'-12'; moist; stiff; medium plasticity; non-stratified | |
| 15 | | | | |
| | | | | Thin (1/4") seam of coarse sand @ 18.5 ft |
| 20 | | | SILT w/very fine sand, clay (15-20%) (MH); gray; moist to wet; very stiff; medium - high plasticity | Noted density increase @ 20 ft |
| | | ML | | |
| 25 | | | | End of boring @ 25 ft bgs |

CH2MHILL

| PROJECT NUMBER | BORING NUMBER | |
|---|---|---|
| 159636.A0.03 | MW-18A (L40375) | SHEET 1 OF 1 |

# WELL COMPLETION DIAGRAM

PROJECT : Riverbend Landfill LOCATION : McMinnville, Oregon Installation date(s): 09/26/2000
ELEVATION : 146.77 ft msl DRILLING CONTRACTOR : Geo-Tech Explorations, Inc.
DRILLING METHOD AND EQUIPMENT USED : B-59 Mobile Hollow-Stem Auger (6.25" ID)
WATER LEVELS : START : END : LOGGER : B. Long

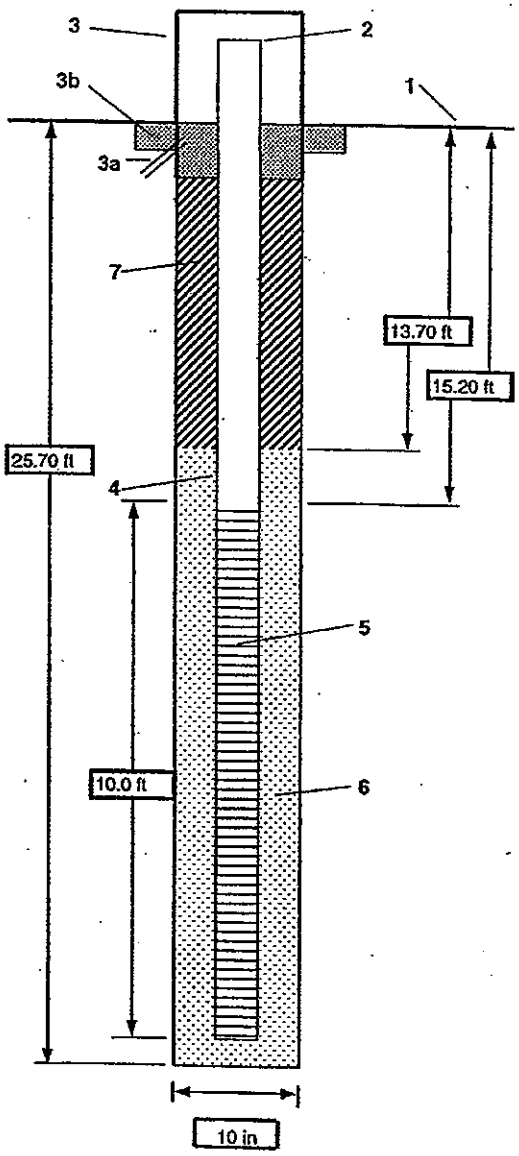


1- Ground elevation at well 146.77 ft msl

2- Top of casing elevation 148.77 ft msl

3- Wellhead protection cover type Above-ground monument
a) drain tube? No
b) concrete pad dimensions Approx. 2' x 2'

4- Diameter/type of well casing 2" Sch. 40 PVC

5- Type/slot size of screen 2" Sch.40 PVC / 0.010 slot

6- Type screen filter Silica sand (20-40)
a) Quantity used 8-50 lb bags

7- Type of seal Med. bentonite chips (45-43 ft), bent. grout to conc pad
a) Quantity used 8-50 lb bags
b) Top of seal Concrete

Development method Pump & surge

Development time Approx. 3 hours

Estimated purge volume 33 gallons

Comments Well screen length is nominal; actual screened portion is approx. 1 foot shorter than labeled length

CH2MHILL

BORING NUMBER MW-18A SHEET 1 of 1

# SOIL BORING LOG

PROJECT : Riverbend Landfill LOCATION : McMinnville, Oregon DATE: 09/26/2000

ELEVATION : 146.77 ft msl DRILLING CONTRACTOR: Geo-Tech Explorations, Inc.

DRILLING METHOD : Hollow-Stem Auger

WATER LEVELS : START : END: LOGGER : B. Long

| DEPTH BELOW SURFACE (FT) | SAMPLE INTERVAL, # | GRAPHIC LOG | SOIL DESCRIPTION<br>SOIL NAME, USCS GROUP SYMBOL, COLOR, MOISTURE CONTENT, RELATIVE DENSITY OR CONSISTENCY, SOIL STRUCTURE, MINERALOGY. | COMMENTS |
|---|---|---|---|---|
| | | | Grass field, pea gravel (old road bed)<br>Samples not obtained 0'-4' | |
| 5 | | ML | SILT (ML), Lt. Brown, moist, medium stiff, platey, massive, mica fragments, fine roots, macropores, trace clay. | |
| 10 | | | CLAY (CL), Lt brown (10-30% clay), medium stiff, platey, mica fragments, rootlets, macropores, increasing moisture @ 10'<br>From 13-25 feet - 1"-2" seams of sandy silt @ 6"-10" intervals; | |
| 15 | | | As above, but mottled lt brown, fewer rootlets & macropores, saturated | |
| 20 | | CL | As above w/some organic fragments, no rootlets or macropores | |
| 25 | | | Clay (CL), bluish-gray, wet, stiff, homogeneous, trace mica. | |

CH2MHILL

| PROJECT NUMBER | BORING NUMBER | |
|---|---|---|
| 159636.A0.03 | MW-18B (L40374) | SHEET 1 OF 1 |

# WELL COMPLETION DIAGRAM

PROJECT: Riverbend Landfill LOCATION: McMinnville, Oregon Installation date(s): 09/25/2000

ELEVATION: 146.58 ft msl DRILLING CONTRACTOR: Geo-Tech Explorations, Inc.

DRILLING METHOD AND EQUIPMENT USED: B-59 Mobile Hollow-Stem Auger (6.25" ID)

WATER LEVELS: START: END: LOGGER: B. Long

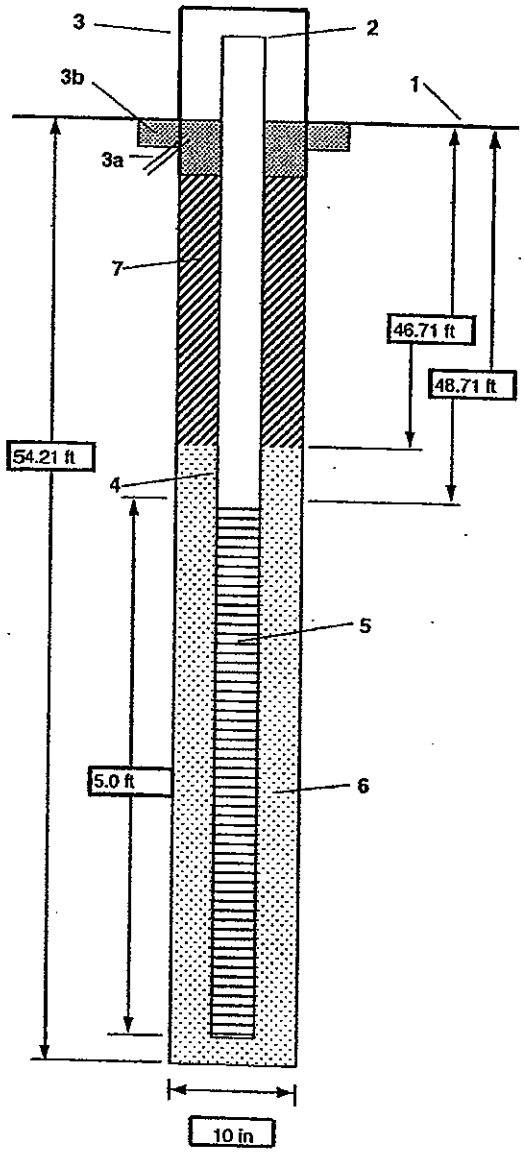


1- Ground elevation at well: 146.58 ft msl

2- Top of casing elevation: 148.57 ft msl

3- Wellhead protection cover type: Above-ground monument
- a) drain tube? No
- b) concrete pad dimensions: Approx. 2' x 2'

4- Diameter/type of well casing: 2" Sch. 40 PVC

5- Type/slot size of screen: 2" Sch.40 PVC / 0.010 slot

6- Type screen filter: Silica sand (10-20)
- a) Quantity used: 7-50 lb bags

7- Type of seal: Bentonite grout
- a) Quantity used: 2-50 lb bags
- b) Top of seal: Concrete

Development method: Pump & surge

Development time: Approx. 2.5 hrs

Estimated purge volume: 80 gallons

Comments: Well screen length is nominal; actual screened portion is approx. 6 inches shorter than labeled length

CH2MHILL

BORING NUMBER MW-18B

SHEET 1 of 2

# SOIL BORING LOG

PROJECT : Riverbend Landfill | LOCATION : McMinnville, Oregon | DATE: 09/25-26/2000

ELEVATION : | DRILLING CONTRACTOR: Geo-Tech Explorations, Inc.

DRILLING METHOD : Hollow-Stem Auger

WATER LEVELS : | START : 12:00 | END: | LOGGER : B. Long

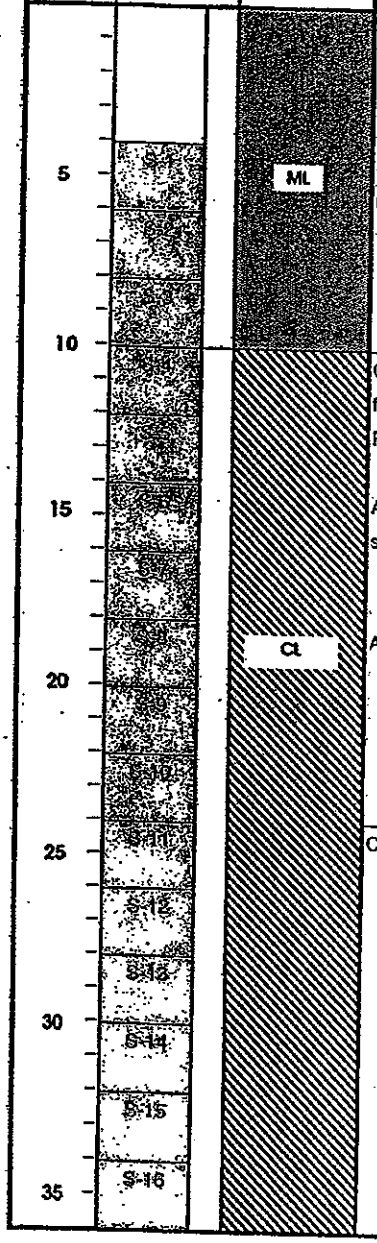


| SOIL DESCRIPTION<br>SOIL NAME, USCS GROUP SYMBOL, COLOR, MOISTURE CONTENT, RELATIVE DENSITY OR CONSISTENCY, SOIL STRUCTURE, MINERALOGY. | COMMENTS |
|---|---|
| Grass field, pea gravel (old road bed), over light brown SILT<br>Samples not obtained 0'-4' | |
| SILT (ML), Lt. Brown, moist, medium stiff, platey, massive, mica fragments, fine roots, macropores, trace clay. | |
| CLAY with silt (CL), Lt brown, medium stiff, platey, mica fragments, rootlets, macropores, increasing moisture @ 10'<br>From 13-25 feet - 1"-2" seams of sandy silt @ 6"-10" intervals | |
| As above, but mottled lt brown, fewer rootlets & macropores, saturated | |
| As above w/some organic fragments, no rootlets or macropores | |
| Clay (CL), bluish-gray, wet, stiff, homogeneous, trace mica. | |

CH2MHILL

BORING NUMBER MW-18B SHEET 2 of 2

# SOIL BORING LOG

PROJECT : Riverbend Landfill | LOCATION : McMinnville, Oregon | DATE: 09/25-26/2000

ELEVATION : | DRILLING CONTRACTOR: Geo-Tech Explorations, Inc.

DRILLING METHOD : Hollow-Stem Auger

WATER LEVELS : | START : | END: | LOGGER : B. Long

| DEPTH BELOW SURFACE (FT) | SAMPLE INTERVAL, # | GRAPHIC LOG | SOIL DESCRIPTION<br>SOIL NAME, USCS GROUP SYMBOL, COLOR, MOISTURE CONTENT, RELATIVE DENSITY OR CONSISTENCY, SOIL STRUCTURE, MINERALOGY. | COMMENTS |
|---|---|---|---|---|
| | | CL | CLAY (CL), dark gray, moist, med stiff to stiff, homogeneous, trace of mica fragments | |
| | | GP | Poorly graded fine GRAVEL with clay (GP), dark gray, moist, very dense, iron oxide on gravel clasts; basalt clasts to 1/2" | |
| 40 | | CL | CLAY (CL), Yellowish-brown to lt gray (mottled), moist, stiff, trace coarse sand, highly weathered | |
| 45 | | | | |
| | | GP | Poorly graded fine GRAVEL (GP) with sand and silt, reddish brown, wet, dense, clast supported, basalt. | |
| 50 | | | | |
| 55 | | | | |
| 60 | | GP-GC | As above with greater silt content | End of boring @ 62 ft |

CH2MHILL

| PROJECT NUMBER | BORING NUMBER | |
|---|---|---|
| 159636.A0.03 | MW-19A (L40376) | SHEET 1 OF 1 |

# WELL COMPLETION DIAGRAM

PROJECT : Riverbend Landfill LOCATION : McMinnville, Oregon Installation date(s): 09/27/2000

ELEVATION : 149.05 ft msl DRILLING CONTRACTOR : Geo-Tech Explorations, Inc.

DRILLING METHOD AND EQUIPMENT USED : B-59 Mobile Hollow-Stem Auger (6.25" ID)

WATER LEVELS : START : END : LOGGER : B. Long

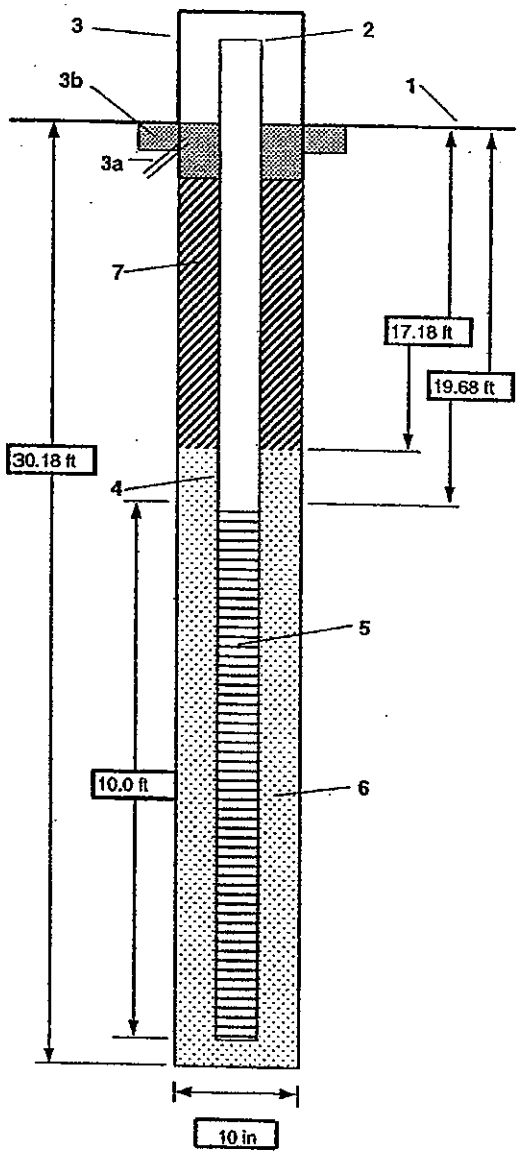


1- Ground elevation at well 149.05 ft msl

2- Top of casing elevation 151.27 ft msl

3- Wellhead protection cover type Above-ground monument
a) drain tube? No
b) concrete pad dimensions Approx. 2' x 2'

4- Diameter/type of well casing 2" Sch. 40 PVC

5- Type/slot size of screen 2" Sch.40 PVC / 0.010 slot

6- Type screen filter Silica sand (20-40)
a) Quantity used 8-50 lb bags

7- Type of seal Medium bentonite chips
a) Quantity used 13-50 lb bags
b) Top of seal Concrete

Development method Pump & surge

Development time Approx. 3 hrs

Estimated purge volume 80 gallons

Comments Well screen length is nominal; actual screened portion is approx. 1 foot shorter than labeled length

CH2MHILL

BORING NUMBER MW-19A SHEET 1 of 1

# SOIL BORING LOG

PROJECT : Riverbend Landfill
LOCATION : McMinnville, Oregon
DATE: 09/27/2000
ELEVATION : 149.05 ft msl
DRILLING CONTRACTOR: Geo-Tech Explorations, Inc.
DRILLING METHOD : Hollow-Stem Auger
WATER LEVELS :
START :
LOGGER : R.E. Long

| DEPTH BELOW SURFACE (FT) | SAMPLE INTERVAL, # | GRAPHIC LOG | SOIL DESCRIPTION<br>SOIL NAME, USCS GROUP SYMBOL, COLOR, MOISTURE CONTENT, RELATIVE DENSITY OR CONSISTENCY, SOIL STRUCTURE, MINERALOGY. | COMMENTS |
|---|---|---|---|---|
| | | | SILT (ML), Lt. Brown, moist, soft, plowed field; no sample 0'-4' | |
| 5 | | ML | Sandy SILT (ML), Lt brown, dry to moist, soft, platey, root channels, trace clay, trace organics | |
| 10 | | | CLAY (CL), light brown to light gray, moist to wet, medium stiff, medium plasticity. | |
| | | | seams of silty sand, 1"-3" thick @ 6"-8" intervals | |
| 15 | | CL | Interbeds of silt & clay, lt brown to lt gray, moist to wet, no roots or macropores (ML-CL) | |
| 20 | | | seams of very fine sand, 3"-6" thick @ 1'-3' intervals | |
| | | | Interbeds of lt gray clay & reddish-brown silty-sand; some iron-rich nodules | |
| 25 | | | CLAY (CL), bluish-gray to dark gray, medium stiff, moist to wet, trace of mica particles | |
| | | CL | | |
| 30 | | | | End of Boring 30 Feet. |

CH2MHILL

| PROJECT NUMBER | BORING NUMBER | |
|---|---|---|
| 159636.A0.03 | MW-20A (L40378) | SHEET 1 OF 1 |

# WELL COMPLETION DIAGRAM

PROJECT: Riverbend Landfill LOCATION: McMinnville, Oregon Installation date(s): 10/02/2000

ELEVATION: 127.20 ft msl DRILLING CONTRACTOR: Geo-Tech Explorations, Inc.

DRILLING METHOD AND EQUIPMENT USED: B-59 Mobile Hollow-Stem Auger (6.25" ID)

WATER LEVELS: START: END: LOGGER: B. Long

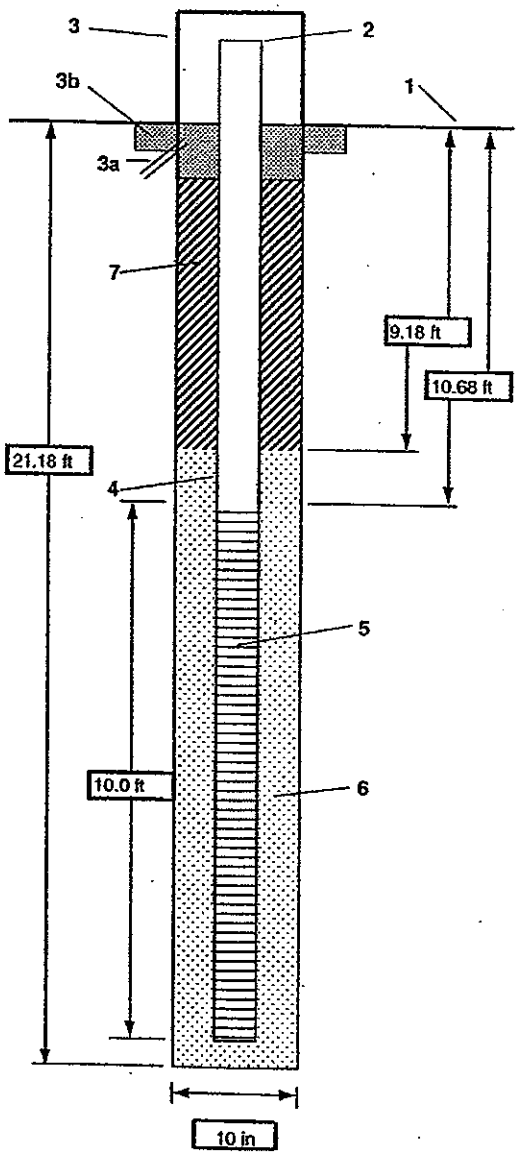


1- Ground elevation at well: 127.20 ft msl

2- Top of casing elevation: 129.92 ft msl

3- Wellhead protection cover type: Above-ground monument
- a) drain tube? No
- b) concrete pad dimensions: Approx. 2' x 2'

4- Diameter/type of well casing: 2" Sch. 40 PVC

5- Type/slot size of screen: 2" Sch.40 PVC / 0.010 slot

6- Type screen filter: Silica sand (20-40)
- a) Quantity used: 9 - 50 lb bags

7- Type of seal: Medium bentonite chips
- a) Quantity used: 6 - 50 lb bags
- b) Top of seal: Concrete

Development method: Pump & surge

Development time: Approx 3.5 hrs

Estimated purge volume: 68 gallons

Comments: Well screen length is nominal; actual screened portion is approx. 1 foot shorter than labeled length

CH2MHILL

BORING NUMBER
MW-20A

SHEET 1 of 1

# SOIL BORING LOG

PROJECT : Riverbend Landfill
LOCATION : McMinnville, Oregon
DATE: 10/02/2000
ELEVATION : 127.20 ft msl
DRILLING CONTRACTOR: Geo-Tech Explorations, Inc.
DRILLING METHOD : Hollow-Stem Auger
WATER LEVELS :
START :
LOGGER : B. Long

| DEPTH BELOW SURFACE (FT) | SAMPLE INTERVAL, # | GRAPHIC LOG | SOIL DESCRIPTION<br>SOIL NAME, USCS GROUP SYMBOL, COLOR, MOISTURE CONTENT, RELATIVE DENSITY OR CONSISTENCY, SOIL STRUCTURE, MINERALOGY. | COMMENTS |
|---|---|---|---|---|
| | | | Grassy field<br>Cuttings: CLAY (CL), gray, moist, medium stiff | |
| 5 | | CL | CLAY w/silt (CL), mottled reddish-brown, medium stiff, moist, trace organics, sand-sized iron nodules, small root channels | |
| 10 | | | As above, but stiffer, moist to wet; darker gray beginning @ 12' | |
| 15 | | CL | CLAY with silt and very fine sand (CL), gray , moist, stiff, few root channels, moist | |
| 20 | | | | |

CH2MHILL

| PROJECT NUMBER | BORING NUMBER | |
|---|---|---|
| 159636.A0.03 | MW-20B (L40377) | SHEET 1 OF 1 |

# WELL COMPLETION DIAGRAM

PROJECT: Riverbend Landfill LOCATION: McMinnville, Oregon Installation date(s): 10/02/2000

ELEVATION: 127.10 ft msl DRILLING CONTRACTOR: Geo-Tech Explorations, Inc.

DRILLING METHOD AND EQUIPMENT USED: B-59 Mobile Hollow-Stem Auger (6.25" ID)

WATER LEVELS: START: END: LOGGER: B. Long

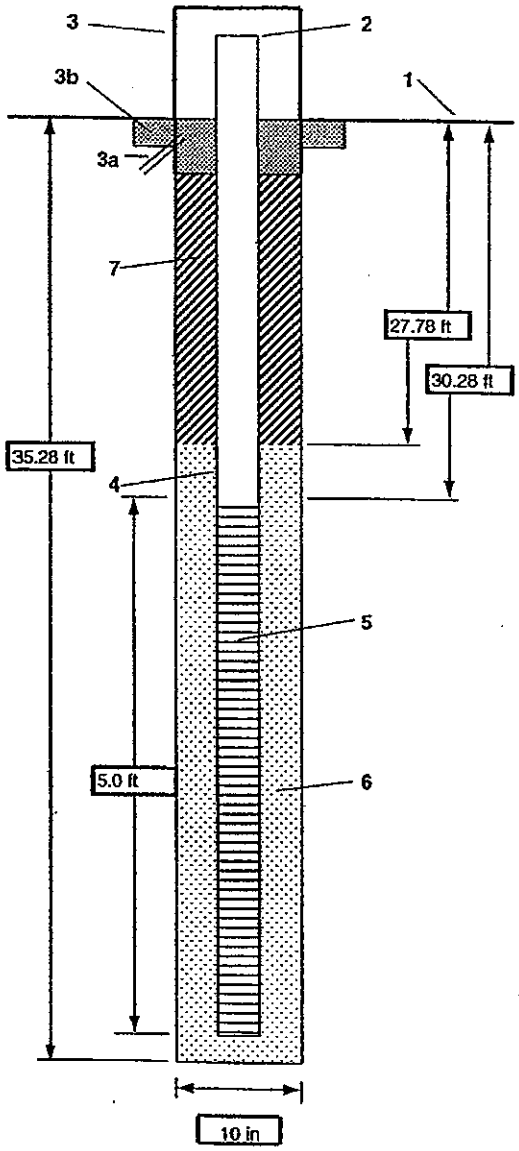


| | |
|---|---|
| 1- Ground elevation at well | 127.10 ft msl |
| 2- Top of casing elevation | 129.72 ft msl |
| 3- Wellhead protection cover type | Above-ground monument |
| a) drain tube? | No |
| b) concrete pad dimensions | Approx. 2' x 2' |
| 4- Diameter/type of well casing | 2" Sch. 40 PVC |
| 5- Type/slot size of screen | 2" Sch.40 PVC / 0.010 slot |
| 6- Type screen filter | Silica sand (10-20) |
| a) Quantity used | 7 -50 lb bags |
| 7- Type of seal | Bentonite chips |
| a) Quantity used | 26 - 50 lb bags |
| b) Top of seal | Concrete |

| | |
|---|---|
| Development method | Pump & surge |
| Development time | Approx. 4 hours |
| Estimated purge volume | 248 gallons |

Comments: Well screen length is nominal; actual screened portion is approx. 6 inches shorter than labeled length

CH2MHILL

MW-20B



# SOIL BORING LOG

PROJECT : Riverbend Landfill | LOCATION : McMinnville, Oregon | DATE: 09/30/2000

ELEVATION : 127.10 ft msl | DRILLING CONTRACTOR: Geo-Tech Explorations, Inc.

DRILLING METHOD : Hollow-Stem Auger

WATER LEVELS : | START : | LOGGER : B. Long

| DEPTH BELOW SURFACE (FT) | SAMPLE INTERVAL, # | GRAPHIC LOG | SOIL DESCRIPTION<br>SOIL NAME, USCS GROUP SYMBOL, COLOR, MOISTURE CONTENT, RELATIVE DENSITY OR CONSISTENCY, SOIL STRUCTURE, MINERALOGY. | COMMENTS |
|---|---|---|---|---|
| 0 | | | Grassy field<br>Cuttings: CLAY (CL), gray, moist, medium stiff. | |
| 5 | | CL | CLAY w/silt (CL), mottled reddish-brown, medium stiff, moist, trace organics, sand-sized iron nodules, small root channels, | |
| 10 | | | As above, but stiffer, moist to wet; darker gray beginning @ 12' | |
| 15 | | CL | CLAY with silt and very fine sand (CL), gray , moist, stiff, few root channels, moist | |
| 20 | | | fine root channels to 24 feet. | |
| 25 | | GP | Poorly graded fine GRAVEL with sand and silt, yellow-brown to red-brown, wet, very dense, oxidized weathered gravel, occasional interbeds of gray plastic clay (GP) | |
| 30 | | | | |
| 35 | | | | |

CH2MHILL

BORING NUMBER
**MW-20B** SHEET 2 of 2

# SOIL BORING LOG

PROJECT : Riverbend Landfill | LOCATION : McMinnville, Oregon | DATE: 09/30/2000

ELEVATION : 127.10 ft msl | DRILLING CONTRACTOR: Geo-Tech Explorations, Inc.

DRILLING METHOD : Hollow-Stem Auger

WATER LEVELS : | START : | LOGGER : B. Long

| DEPTH BELOW SURFACE (FT) | SAMPLE INTERVAL, # | GRAPHIC LOG | SOIL DESCRIPTION<br>SOIL NAME, USCS GROUP SYMBOL, COLOR, MOISTURE CONTENT, RELATIVE DENSITY OR CONSISTENCY, SOIL STRUCTURE, MINERALOGY. | COMMENTS |
|---|---|---|---|---|
| 40 | | GC | GRAVEL with clay, reddish-brown, moist to wet, dense, matrix supported, basalt gravel clasts | End of boring @ 40 ft |

CH2MHILL

| PROJECT NUMBER | BORING NUMBER | |
|---|---|---|
| 159636.A0.03 | MW-21A (L40380) | SHEET 1 OF 1 |

# WELL COMPLETION DIAGRAM

PROJECT : Riverbend Landfill LOCATION : McMinnville, Oregon Installation date(s): 10/04/2000

ELEVATION : 116.18 ft msl DRILLING CONTRACTOR : Geo-Tech Explorations, Inc.

DRILLING METHOD AND EQUIPMENT USED : B-59 Mobile Hollow-Stem Auger (6.25" ID)

WATER LEVELS : START : 13:00 END : 14:30 LOGGER : D. Orlowski

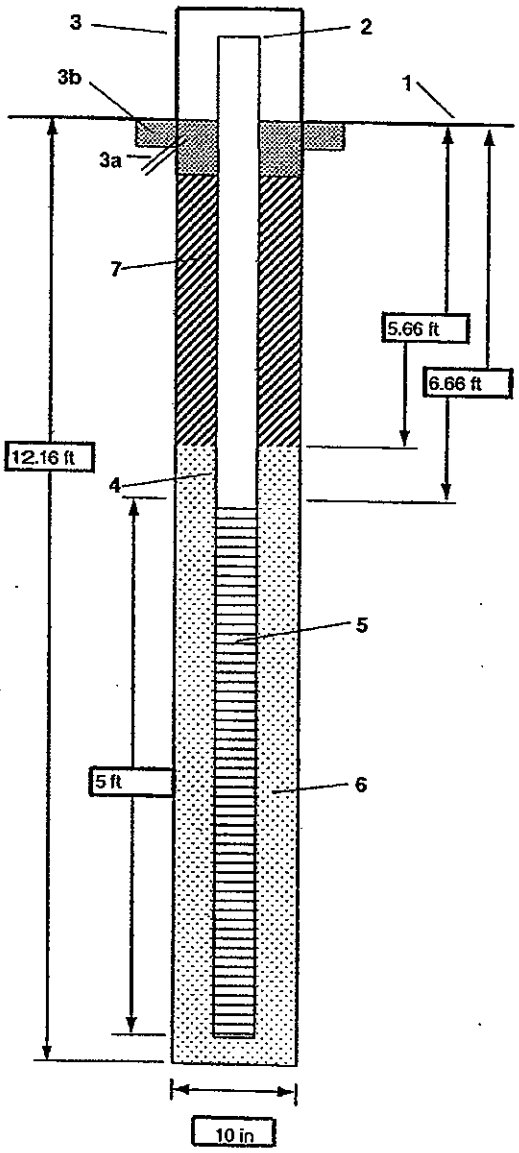


| | |
|---|---|
| 1- Ground elevation at well | 116.18 ft msl |
| 2- Top of casing elevation | 120.02 ft msl |
| 3- Wellhead protection cover type | Above-ground monument |
| a) drain tube? | No |
| b) concrete pad dimensions | Approx. 2' x 2' |
| 4- Diameter/type of well casing | 2" Sch. 40 PVC |
| 5- Type/slot size of screen | 2" Sch.40 PVC / 0.010 slot |
| 6- Type screen filter | Silica sand (20-40) |
| a) Quantity used | 8 - 50 lb bags |
| 7- Type of seal | Bentonite chips |
| a) Quantity used | 3 - 50 lb bags |
| b) Top of seal | Concrete |

| | |
|---|---|
| Development method | Pump & surge |
| Development time | Approx. 5 hours |
| Estimated purge volume | 8 gallons |

Comments Well screen length is nominal; actual screened portion is approx. 6 inches shorter than labeled length

CH2MHILL

BORING NUMBER
MW-21A

SHEET 1 of 1

# SOIL BORING LOG

PROJECT : Riverbend Landfill
LOCATION : McMinnville, Oregon
DATE: 10/04/2000
ELEVATION : 116.18 ft msl
DRILLING CONTRACTOR: Geo-Tech Explorations, Inc.
DRILLING METHOD : Hollow-Stem Auger
WATER LEVELS :
START : 9:00 END: 11:50
LOGGER : D. Orlowski

| DEPTH BELOW SURFACE (FT) | SAMPLE INTERVAL, # | GRAPHIC LOG | SOIL DESCRIPTION<br>SOIL NAME, USCS GROUP SYMBOL, COLOR, MOISTURE CONTENT, RELATIVE DENSITY OR CONSISTENCY, SOIL STRUCTURE, MINERALOGY. | COMMENTS |
|---|---|---|---|---|
| | | | Grassy field<br>No samples obtained 0'-4' | |
| 5 | | ML | SILT with fine sand (ML), reddish-brown, moist, medium stiff, low plasticity ; root channels present | |
| | | | SILT (ML), reddish-brown; moist; medium stiff, some mottled gray areas; higher moisture than 4'-6'; medium plastic. | |
| 10 | | ML | Brown and gray mottling ; some rootlets; decayed wood particle @ 11'; increased gray mottling @ 11'; very moist; med-high plasticity | End of boring @ 13 ft |

CH2MHILL

| PROJECT NUMBER | BORING NUMBER | |
|---|---|---|
| 159636.A0.03 | MW-21B (L40379) | SHEET 1 OF 1 |

# WELL COMPLETION DIAGRAM

PROJECT : Riverbend Landfill LOCATION : McMinnville, Oregon Installation date(s): 10/04/2000

ELEVATION : 116.56 ft msl DRILLING CONTRACTOR : Geo-Tech Explorations, Inc.

DRILLING METHOD AND EQUIPMENT USED : B-59 Mobile Hollow-Stem Auger (6.25" ID)

WATER LEVELS : START : 9:00 END : 11:50 LOGGER : D. Orlowski

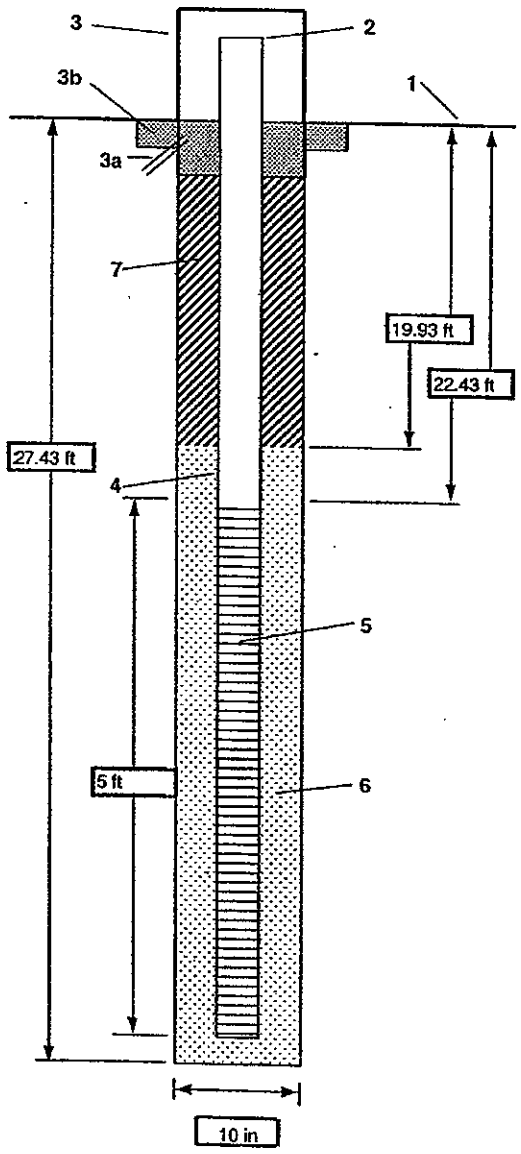


| | |
|---|---|
| 1- Ground elevation at well | 116.56 ft msl |
| 2- Top of casing elevation | 119.53 ft msl |
| 3- Wellhead protection cover type | Above-ground monument |
| a) drain tube? | No |
| b) concrete pad dimensions | Approx. 2' x 2' |
| 4- Diameter/type of well casing | 2" Sch. 40 PVC |
| 5- Type/slot size of screen | 2" Sch.40 PVC / 0.010 slot |
| 6- Type screen filter | Silica sand (10-20) |
| a) Quantity used | 7 - 50 lb bags |
| 7- Type of seal | Bentonite chips |
| a) Quantity used | 16 - 50 lb bags |
| b) Top of seal | Concrete |

| | |
|---|---|
| Development method | Pump & surge |
| Development time | Approx. 5 hours |
| Estimated purge volume | 312 gallons |

Comments Well screen length is nominal; actual screened portion is approx. 6 inches shorter than labeled length

CH2MHILL

BORING NUMBER MW-21B SHEET 1 of 1

# SOIL BORING LOG

PROJECT : Riverbend Landfill
LOCATION : McMinnville, Oregon
DATE: 10/04/2000
ELEVATION : 116.56 ft msl
DRILLING CONTRACTOR: Geo-Tech Explorations, Inc.
DRILLING METHOD : Hollow-Stem Auger
WATER LEVELS :
START : 13:30 END: 15:40
LOGGER : D. Orlowski

| DEPTH BELOW SURFACE (FT) | SAMPLE INTERVAL, # | GRAPHIC LOG | SOIL DESCRIPTION<br>SOIL NAME, USCS GROUP SYMBOL, COLOR, MOISTURE CONTENT, RELATIVE DENSITY OR CONSISTENCY, SOIL STRUCTURE, MINERALOGY. | COMMENTS |
|---|---|---|---|---|
| | | | Grassy field, over lt. Brown SILT. | |
| | | | No samples obtained 0'-4' | |
| 5 | | ML | SILT with fine sand (ML), reddish brown, moist, med. stiff low plasticity | |
| | | | SILT with fine sand (ML), reddish-brown , moist, med. stiff faint mottling; moderate plasticity | |
| 10 | | ML | | |
| | | | SILT (ML), brown and gray mottling, moist, stiff; some rootlets; decayed wood particle @ 11'; increased gray mottling @ 11'; | |
| 15 | | | Higher moisture, high plasticity | |
| | | SP | Poorly-graded SAND with silt (SP); gray-brown, wet, dense. clay present (10%); (SP) | |
| 20 | | GP-GM | Poorly-graded GRAVEL with silt and sand; reddish-brown, wet, dense, gravel clasts subrounded, 5-20 mm; (GP) , sand is medium to coarse. | |
| 25 | | SP | Poorly-graded coarse SAND with silt (SP); gray, wet , dense. | |
| | | GM | GRAVEL with silt, sand, and clay, reddish-brown and gray (GM) ; wet, dense, sand (10%), round gravel to 25 mm; clast-supported; | |
| 30 | | SM | SILTY SAND (SM), red-brown, wet; dense, gravel (10%) (SM) | |
| | | ML | SILT with sand (ML), red-brown; moist;stiff, low plast. | |
| 35 | | | | End of boring @ 34 ft |

# SCS ENGINEERS

# BORING LOG

14945 SW Sequoia Parkway, Suite 180
Portland, OR 97224

## BORING NUMBER: MW-22A



**Riverbend Landfill Company**
**Riverbend Landfill**
**McMinnville, Oregon**

**JOB NUMBER: 04210010.00**

REMARKS:
Mobile B-53 drill rig with automatic hammer (140 lb. hammer, 30-inch drop)

| Depth (meters) | Depth (feet) | Sample Location | Sample Number | Blow Counts | OVM (ppm) | USCS Soil Class. | Graphic Log | Description |
|---|---|---|---|---|---|---|---|---|
| 0 | 0 | | | | | | | Surface: natural ground surface (grass) |
| 1 | | | | | | | | |
| 2 | 5 | | 22A-1 | 2<br>2<br>1 | | ML | | CLAYEY SILT (ML), dark yellowish brown (10YR) 4/4), damp, soft, clay 10-20 percent, few rootlets, few small (less than 1/4-inch) carbonized (black) wood fragments |
| 3 | 10 | | 22A-2 | --- | | ML | | At bottom of Shelby tube sample, FINE SANDY SILT (ML), dark yellowish brown (10YR 4/6), moist, sand 10-20 percent, slightly micaceous |
| 4 | | | | | | | | |
| 5 | 15 | | 22A-3 | --- | | CL/ML | | At bottom of Shelby tube sample, SILTY CLAY / CLAYEY SILT (CL/ML), dark yellowish brown (10RY 4/6), moist to wet, slight orange brown oxide (iron) mottling, trace fine sand |
| 6 | 20 | | 22A-4 | --- | | CL | | At bottom of Shelby tube sample, SILTY CLAY (CL), dark yellowish brown (10YR 4/6) with some orange brown oxide (iron) mottling and light olive brown mottling, moist to wet, medium plasticity |
| 7 | | | | | | | | Total Depth = 22.5 feet |
| 8 | 25 | | | | | | | Sampled to 22.5 feet; drilled out borehole to 21.0 feet for well installation. |
| 9 | 30 | | | | | | | Groundwater level initially measured at 12 feet below ground surface (bgs) after well installation on September 23, 2010. The water level was at 18.5 feet bgs on September 28, 2010, and no water was present on October 4, 2010, during the fourth quarter semiannual monitoring event. |
| 10 | | | | | | | | Aboveground construction includes 8-inch protective steel monument and three bollard posts. |
| 11 | 35 | | | | | | | |
| 12 | 40 | | | | | | | |

Completion Detail

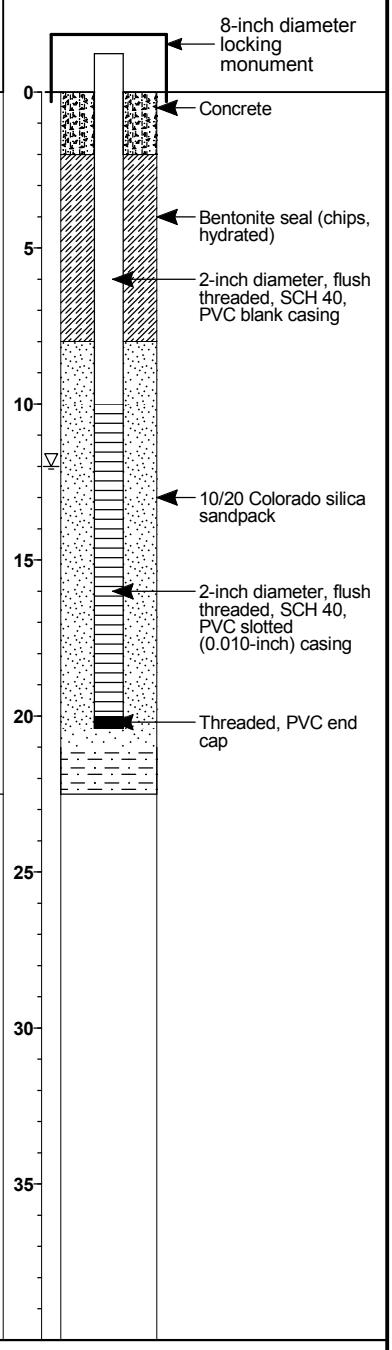


Drilling Company: **Major Drilling Environmental, LLC**
Drilling Method: **Hollow Stem Auger**
Logged By: **David Lamadrid**
Sampling Method: **See legend for explanation of sample types**

Date Started: **9/23/10**
Date Ended: **9/23/10**
Boring Diameter: **10-inch**

Elevation: **123.5 ft.**
Total Depth: **22.5 ft.**

STANDARD_LOG RLF_HSC MONITORING WELL LOGS.GPJ STD_LOG.GDT 2/23/11

# SCS ENGINEERS

# BORING LOG

14945 SW Sequoia Parkway, Suite 180
Portland, OR 97224

## BORING NUMBER: MW-22B



**Riverbend Landfill Company**
**Riverbend Landfill**
**McMinnville, Oregon**

**JOB NUMBER: 04210010.00**

REMARKS:
Mobile B-53 drill rig with automatic hammer (140 lb. hammer, 30-inch drop)

| Depth (meters) | Depth (feet) | Sample Location | Sample Number | Blow Counts | OVM (ppm) | USCS Soil Class. | Graphic Log | Description |
|---|---|---|---|---|---|---|---|---|
| 0 | 0 | | 22B-1 | --- | | CL/ML | | Surface: natural ground surface (grass)<br>SILTY CLAY / CLAYEY SILT (CL/ML), dark yellowish brown (10YR 4/4), damp to moist, roots and rootlets<br>- At 2.0 feet, damp, minor rootlets, rare carbonized (black) wood fragments |
| 1 | 5 | | 22B-2 | --- | | ML | | - At 3.0 feet, grades to CLAYEY SILT (ML), same appearance as above, damp, clay 10-20 percent<br>- At 6.5 feet, grades to CLAYEY SILT (ML) with fine sand, dark yellowish brown (10YR 4/6), moist, clay 20-30%, faintly micaceous, medium plasticity<br>- At 8.0 feet, grades to moist to wet |
| 2 | 10 | | 22B-3 | --- | | | | - At 10.0 feet, same as above, but with slight orange brown oxide (iron) mottling |
| 3 | | | | | | ML | | - At 11.0 feet, quickly grades to FINE SANDY SILT (ML), dark yellowish brown (10YR 4/6), moist to wet, sand 20-30 percent, slightly micaceous |
| 4 | 15 | | 22B-4 | --- | | CL/ML | | SILTY CLAY / CLAYEY SILT (CL/ML), dark yellowish brown (10YR 4/6), moist to wet, slight orange brown oxide (iron) and light olive brown (2.5Y 5/4) mottling, trace fine sand, medium plasticity |
| 5 | | | | | | | | |
| 6 | 20 | | 22B-5 | --- | | CL | | SILTY CLAY (CL), same appearance as above, more oxide and light olive brown mottling with depth, apparent soft consistency |
| 7 | | | | | | | | |
| 8 | 25 | | 22B-6 | --- | | SW | | Quickly grades to FINE TO MEDIUM SAND (SW) with clay, dark yellowish brown (10YR 4/4), wet, predominantely fine grained, rare small carbonized (black) wood fragments |
| | | | | | | SC<br>SW | | CLAYEY FINE SAND (SC) lens, dark gray (5Y 4/1), wet, clay 30-40 percent<br>- At 27.9 feet, same FINE TO MEDIUM SAND (SW) as at 24.5 feet, but with lenses that contain abundant orange brown oxide (iron) mottling |
| 9 | 30 | | 22B-7 | 0<br>2 | | SC | | - At 29.3 feet, CLAYEY FINE TO MEDIUM SAND (SC), similar in appearance to lens at 27.5 to 27.9 feet |
| | | | 22B-8 | 6<br>2 | | GW | | - At 30.2 feet, SANDY GRAVEL (GW) with trace to some fines, olive gray (5Y 4/2), wet, loose, fine to coarse sand (f:m:c = 50:25:25) 30-40 percent, fine to coarse subrounded gravel to 1-inch diameter, predominantly fine gravel |
| 10 | | | | 16<br>26 | | GC | | - At 31.5 feet, becomes medium dense<br>- At 32.8 feet, CLAYEY SANDY GRAVEL (GC), dark olive gray (5Y 3/2), damp to moist, medium dense, clay 10-20 percent, fine to coarse sand 30-40%, fine to coarse subrounded gravel to 2-inch diameter (2-inch diameter gravel in sample shoe) |
| 11 | 35 | | 22B-9 | 8<br>19<br>34 | | | | |
| 12 | 40 | | 22B-10 | 50/4" | | BASALT | | - At 35.0 feet, same as above but dark yellowish brown (10YR 4/4), dense, gravel to 2.5-inch diameter |

Completion Detail

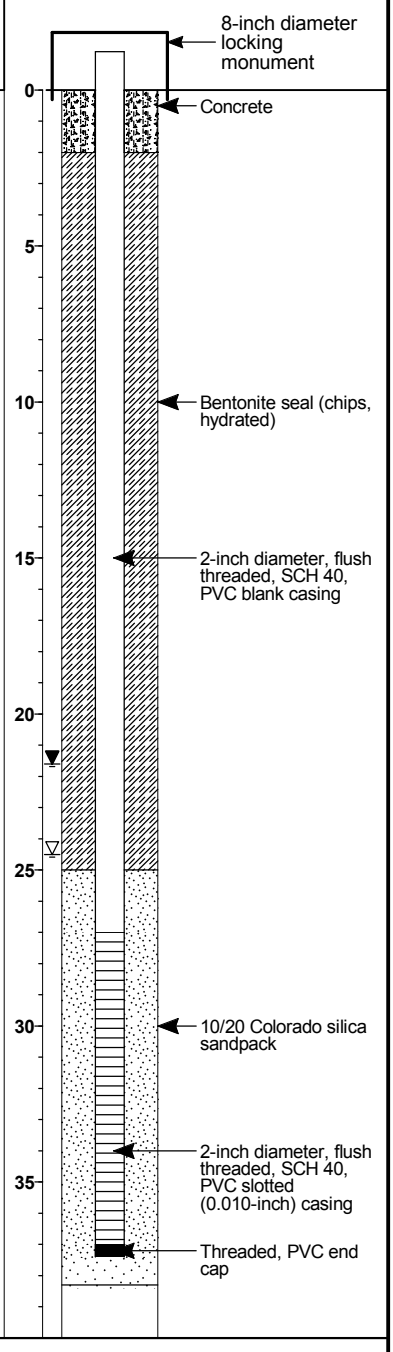


Drilling Company: **Major Drilling Environmental, LLC**
Drilling Method: **Hollow Stem Auger**
Logged By: **David Lamadrid**
Sampling Method: **See legend for explanation of sample types**

Date Started: **9/22/10**
Date Ended: **9/23/10**
Boring Diameter: **10-inch**

Elevation: **123.5 ft.**
Depth to Water: **21.6 ft.**
Total Depth: **38.3 ft.**

STANDARD_LOG RLF_HSC MONITORING WELL LOGS.GPJ STD_LOG.GDT 2/23/11

# SCS ENGINEERS

# BORING LOG

14945 SW Sequoia Parkway, Suite 180
Portland, OR 97224

**BORING NUMBER: MW-22B**



**Riverbend Landfill Company**

**JOB NUMBER: 04210010.00**

| Depth (meters) | Depth (feet) | Sample Location | Sample Number | Blow Counts | OVM (ppm) | USCS Soil Class. | Graphic Log | Description | Completion Detail |
|---|---|---|---|---|---|---|---|---|---|
| | 40 | | | | | | | - At 37 feet, driller reports hard drilling<br>- At 38.0 feet, drilling refusal, BASALT, dark gray (5Y 4/1), fine grained, hard | 40 |
| 13 | | | | | | | | Total Depth = 38.3 feet | |
| | 45 | | | | | | | Aboveground construction includes 8-inch protective steel monument and three bollard posts | 45 |
| 14 | | | | | | | | Static groundwater level measured on Sept. 28, 2010. | |
| 15 | 50 | | | | | | | | 50 |
| 16 | | | | | | | | | |
| | 55 | | | | | | | | 55 |
| 17 | | | | | | | | | |
| 18 | 60 | | | | | | | | 60 |
| 19 | | | | | | | | | |
| | 65 | | | | | | | | 65 |
| 20 | | | | | | | | | |
| 21 | 70 | | | | | | | | 70 |
| 22 | | | | | | | | | |
| | 75 | | | | | | | | 75 |
| 23 | | | | | | | | | |
| 24 | 80 | | | | | | | | 80 |
| 25 | | | | | | | | | |
| 26 | 85 | | | | | | | | 85 |

STANDARD_LOG RLF_HSC MONITORING WELL LOGS.GPJ STD_LOG.GDT 2/23/11

# SCS ENGINEERS

# BORING LOG

14945 SW Sequoia Parkway, Suite 180
Portland, OR 97224

**BORING NUMBER: MW-23A** Page 1 of 1

**Riverbend Landfill Company**
**Riverbend Landfill**
**McMinnville, Oregon**

**JOB NUMBER: 04210010.00**

REMARKS:
Mobile B-53 drill rig with automatic hammer (140 lb. hammer, 30-inch drop)

| Depth (meters) | Depth (feet) | Sample Location | Sample Number | Blow Counts | OVM (ppm) | USCS Soil Class. | Graphic Log | Description |
|---|---|---|---|---|---|---|---|---|
| 0 | 0 | | | | | | | Surface: natural ground surface (grass) |
| 1 | | | | | | | | |
| | 5 | | 23A-1 | 5<br>9<br>13 | | CL | | CLAY (CL), very dark gray (5Y 3/1), moist, very stiff, abundant orange brown oxide (iron) mottling, few roots throughout, low to medium plasticity |
| 2 | | | | | | | | |
| 3 | 10 | | 23A-2 | 3<br>4<br>4 | | CL/ML | | SILTY CLAY / CLAYEY SILT (CL/ML), mottled olive gray (5Y 4/2) and gray (2.5Y N5), moist, firm, pieces of carbonaceous (black) wood fragments, low to medium plasticity |
| 4 | | | | | | | | |
| | 15 | | 23A-3 | --- | | CL/ML | | Same as above |
| 5 | | | | | | | | |
| 6 | 20 | | 23A-4 | --- | | CL | | - At 20.0 feet, SILTY CLAY (CL), dark brown (10YR 4/3), moist to wet, firm, abundant orange brown oxide (iron) mottling, low to medium plasticity<br>- At 24.0 feet, grades to CLAYEY SILT (ML) with trace to some very fine sand, mottled olive brown (2.5Y 4/3) and dark brown (7.5Y 4/4), moist to wet, stiff, abundant orange brown oxide (iron) staining, low to medium plasticity |
| 7 | | | 23A-5 | 5<br>7<br>8 | | | | |
| | | | 23A-6 | 5<br>6 | | ML | | - At 25.7 feet, SILTY SAND (SM), fine to medium sand [f:m = 90:10], silt 20-30 percent, same color and appearance as above, moist to wet, medium dense |
| 8 | 25 | | 23A-7 | 9<br>9 | | SM | | |
| | | | 23A-8 | 11<br>13<br>10<br>10<br>14 | | CL | | - At 26.3 feet, CLAY (CL), dark olive gray (5Y 3/2), damp becoming moist with depth, very stiff, rare remnant carbonaceous (black) wood fragments, low to medium plasticity, few fine gravels, small scattered orange brown oxidized nodules |
| 9 | 30 | | | | | | | Total Depth = 28.0 feet<br><br>Sampled to 28.0 feet; drilled out borehole to 26.5 feet for well installation.<br><br>Aboveground construction includes 8-inch protective steel monument and three bollard posts.<br><br>Static groundwater level measured on Aug. 31, 2010. |
| 10 | | | | | | | | |
| | 35 | | | | | | | |
| 11 | | | | | | | | |
| 12 | 40 | | | | | | | |

Completion Detail

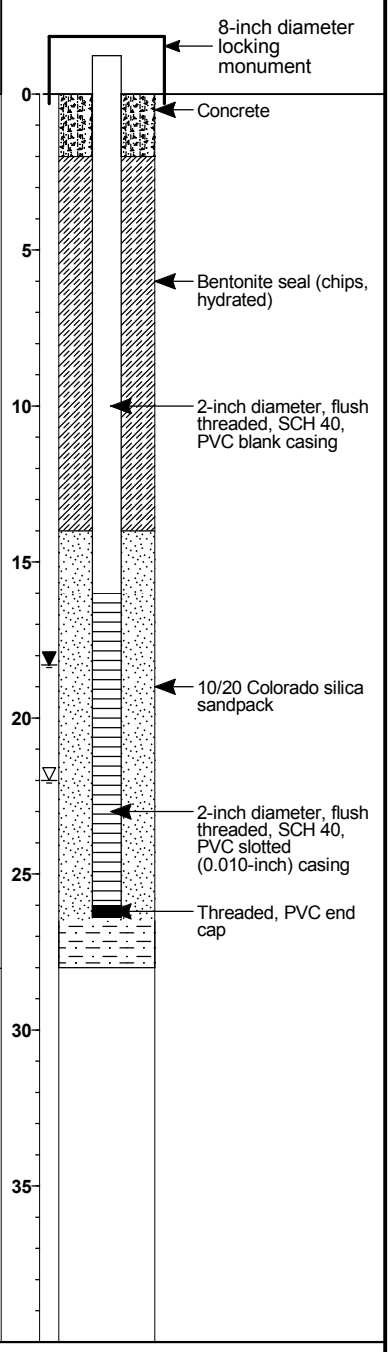


Drilling Company: **Major Drilling Environmental, LLC**
Drilling Method: **Hollow Stem Auger**
Logged By: **David Lamadrid**
Sampling Method: **See legend for explanation of sample types**

Date Started: **8/17/10**
Date Ended: **8/18/10**
Boring Diameter: **10-inch**

Elevation: **129.0 ft.**
Depth to Water: **18.3 ft.**
Total Depth: **28.0 ft.**

STANDARD_LOG RLF_HSC MONITORING WELL LOGS.GPJ STD_LOG.GDT 2/23/11

# SCS ENGINEERS

# BORING LOG

14945 SW Sequoia Parkway, Suite 180
Portland, OR 97224

## BORING NUMBER: MW-23B



**Riverbend Landfill Company**
**Riverbend Landfill**
**McMinnville, Oregon**

**JOB NUMBER: 04210010.00**

REMARKS:
Mobile B-53 drill rig with automatic hammer (140 lb. hammer, 30-inch drop)

| Depth (meters) | Depth (feet) | Sample Location | Sample Number | Blow Counts | OVM (ppm) | USCS Soil Class. | Graphic Log | Description |
|---|---|---|---|---|---|---|---|---|
| 0 | 0 | | 23B-1 | --- | | CL | | Surface: natural ground surface<br>CLAY (CL), olive brown (2.5Y 4/4), damp, some very dark grayish brown (10YR3/2) mottling, moderate roots to 3 feet, low plasticity |
| 1 | | | | | | | | - At 3.0 feet, becomes moist |
| | 5 | | 23B-2 | --- | | | | - At 5.0 feet, gradational color change to dark olive gray (5Y 3/2), approximately 1 foot zone at contact with abundant orange brown oxide (iron) staining and slightly to moderately indurated<br>- At 6.0 feet, becomes moist to wet, low to medium plasticity |
| 2 | | | | | | | | - At 8.5 feet, gradational color change to mottled olive gray (5Y 4/2) and gray (2.5Y N5), some black flecks, rare micropores |
| 3 | 10 | | 23B-3 | --- | | | | |
| 4 | | | | | | | | At 12.5 feet, SILTY CLAY (CL), dark brown (10YR 4/3), moist to wet, silt 20-30 percent, slight orange and gray mottling, trace very fine sand, low plasticity |
| | 15 | | 23B-4 | --- | | | | |
| 5 | | | | | | | | At 17.5 feet, CLAY, same appearance and moisture as above, trace silt and more moisture with depth, medium to high plasticity |
| 6 | 20 | | 23B-5 | --- | | CL | | |
| 7 | | | | | | | | |
| | 25 | | 23B-6 | --- | | ML | | CLAYEY SILT (ML), mottled olive brown (2.5Y 4/3) and dark brown (7.5Y 4/4), moist to wet, abundant orange brown oxide (iron) mottling, medium plasticity |
| 8 | | | | | | SM | | SILTY SAND (SM), mottled olive brown (2.5Y 4/3 and dark brown (7.5Y 4/4) with oxide mottling, moist, fine to medium sand [f:m = 90:10), silt 10-20 percent, some moderately indurated zones from oxide |
| | | | 23B-7 | --- | | CL | | - At 27.5 feet, CLAY (CL), olive (5Y 4/4), damp to moist, apparent hard consistency, rare fine gravel, medium plasticity |
| 9 | 30 | | 23B-8 | 22<br>35 | | CL/GC | | - At 28.0 feet, attempt shelby tube sample but can only push it 24 inches |
| | | | 23B-9 | 14<br>7 | | CL | | - At 30.0 feet, GRAVELLY CLAY / CLAYEY GRAVEL (CL/GC) with fine to medium sand, dark brown (10YR 3/6, wet, medium dense, rounded gravel to 2-inch diameter |
| 10 | | | | 11<br>14 | | | | - At 31.5 feet, CLAY (CL), light brownish gray (2.5Y 6/2), damp, very stiff, abundant orange brown oxide (iron) flecks and nodules, trace silt |
| | 35 | | 23B-10 | --- | | SW | | - At 34.5 feet, driller reports gravel encountered |
| 11 | | | | | | GW | | - At 35.0 feet, GRAVELLY SAND (SW), grayish brown (2.5Y 5/2), wet, fine to coarse sand [f:m:c = 20:50:30], fine to coarse subangular gravel 10-20 percent |
| | | | | | | SW | | - At 35.9 feet, SANDY GRAVEL (GW) with fines, reddish brown (5YR 4/4) from oxidation, wet, fine to |
| 12 | 40 | | | | | | | |

**Completion Detail**

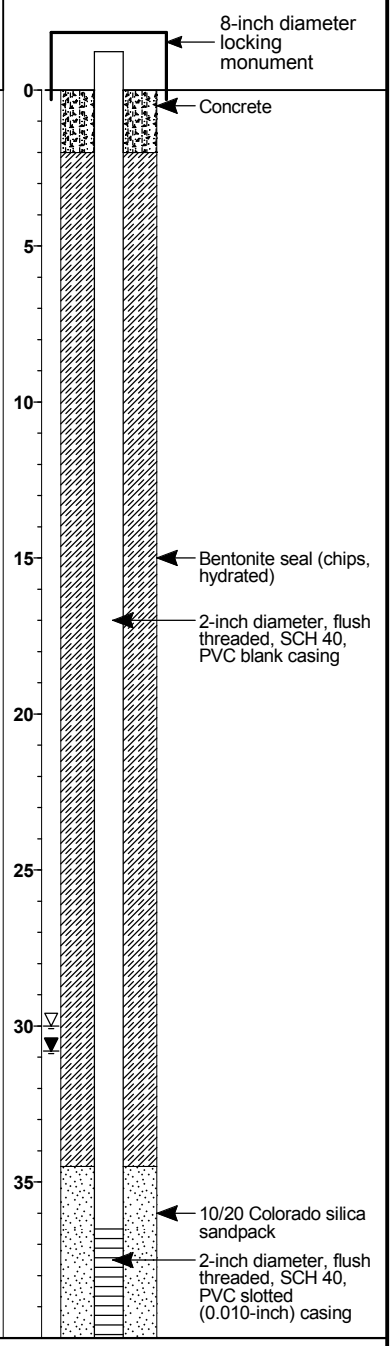


Drilling Company: **Major Drilling Environmental, LLC**
Drilling Method: **Hollow Stem Auger**
Logged By: **David Lamadrid**
Sampling Method: **See legend for explanation of sample types**

Date Started: **8/16/10**
Date Ended: **8/17/10**
Boring Diameter: **10-inch**

Elevation: **129.0 ft.**
Depth to Water: **30.8 ft.**
Total Depth: **42.3 ft.**

STANDARD_LOG RLF_HSC MONITORING WELL LOGS.GPJ STD_LOG.GDT 2/23/11

# SCS ENGINEERS

# BORING LOG

14945 SW Sequoia Parkway, Suite 180
Portland, OR 97224

**BORING NUMBER: MW-23B**



**Riverbend Landfill Company**

**JOB NUMBER: 04210010.00**

| Depth (meters) | Depth (feet) | Sample Location | Sample Number | Blow Counts | OVM (ppm) | USCS Soil Class. | Graphic Log | Description | Completion Detail |
|---|---|---|---|---|---|---|---|---|---|
| | 40 | | 23B-11 | 7<br>33<br>50/3" | | SLTST | | coarse subrounded gravel, fine to coarse sand [f:m:c = 40:40:20]<br>- At approx. 38.0 feet, GRAVELLY SAND (SW), dark brown (10YR 3/3), wet, very dense, fine to coarse sand [f:m:c = 20:40:40], fine subangular gravel 20-30%<br>- At 42.0 feet, drilling refusal, SILTSTONE, dark gray (2.5Y N4), dry to damp, hard (moderately indurated), trace very fine sand | 40 |
| 13 | | | 23B-12 | 50/4" | | | | | |
| | 45 | | | | | | | | 45 |
| 14 | | | | | | | | | |
| | | | | | | | | Total Depth = 42.3 feet<br><br>Aboveground construction includes 8-inch protective steel monument and three bollard posts.<br><br>Static groundwater level measured on Aug. 31, 2010. | |
| 15 | 50 | | | | | | | | 50 |
| 16 | | | | | | | | | |
| | 55 | | | | | | | | 55 |
| 17 | | | | | | | | | |
| 18 | | | | | | | | | |
| | 60 | | | | | | | | 60 |
| 19 | | | | | | | | | |
| | 65 | | | | | | | | 65 |
| 20 | | | | | | | | | |
| 21 | | | | | | | | | |
| | 70 | | | | | | | | 70 |
| 22 | | | | | | | | | |
| | 75 | | | | | | | | 75 |
| 23 | | | | | | | | | |
| 24 | | | | | | | | | |
| | 80 | | | | | | | | 80 |
| 25 | | | | | | | | | |
| 26 | | | | | | | | | |
| | 85 | | | | | | | | 85 |

Completion Detail: Threaded, PVC end cap

STANDARD_LOG RLF_HSC MONITORING WELL LOGS.GPJ STD_LOG.GDT 2/23/11

# SCS ENGINEERS

# BORING LOG

14945 SW Sequoia Parkway, Suite 180
Portland, OR 97224

**BORING NUMBER: MW-24A** Page 1 of 1

**Riverbend Landfill Company**
**Riverbend Landfill**
**McMinnville, Oregon**

**JOB NUMBER: 04210010.00**

REMARKS:
Mobile B-53 drill rig with automatic hammer (140 lb. hammer, 30-inch drop)

| Depth (meters) | Depth (feet) | Sample Location | Sample Number | Blow Counts | OVM (ppm) | USCS Soil Class. | Graphic Log | Description |
|---|---|---|---|---|---|---|---|---|
| 0 | 0 | | | | | | | Surface: natural ground surface (harvested wheat field) |
| 1 | 5 | | 24A-1 | 3<br>3<br>3 | | ML | | CLAYEY SILT (ML), olive brown (2.5YR 4/3), damp to moist, firm, faintly micaceous, low plasticity |
| 2 | 10 | | 24A-2 | 1<br>2<br>2 | | CL/ML | | SILTY CLAY / CLAYEY SILT (CL/ML), same appearance as above, moist, soft to firm |
| 3 | 15 | | 24A-3 | 0<br>1<br>2 | | CL | | SILTY CLAY (CL), dark yellowish brown (10YR 4/4), moist to wet, soft, some olive gray mottling, concave partings |
| 4 | 20 | | 24A-4 | 0<br>1<br>2 | | CL/ML | | SILTY CLAY / CLAYEY SILT (CL/ML), light olive brown (2.5Y 4/4), wet, soft, some orange brown oxide (iron) flecks (less than 1/8 inch), low to medium plasticity |
| 5 | 25 | | 23A-5 | 2<br>4<br>4 | | ML | | SILT (ML), olive brown (2.5Y 4/3), damp to moist, soft, trace clay, faintly micaceous, blocky texture |
| 6 | | | | | | | | Total Depth = 26.5 feet |
| 7 | | | | | | | | Sampled to 26.5 feet; drilled out borehole to 26.0 feet for well installation. |
| 8 | | | | | | | | Aboveground construction includes 8-inch protective steel monument and three bollard posts. |
| 9 | | | | | | | | Static groundwater level measured on Sept. 1, 2010. |
| 10 | 30 | | | | | | | |
| 11 | 35 | | | | | | | |
| 12 | 40 | | | | | | | |

Completion Detail

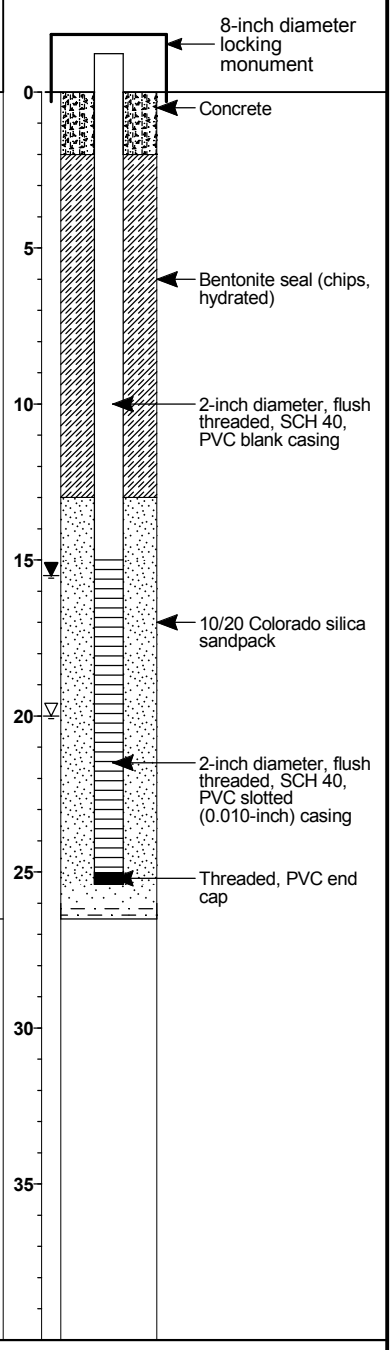


Drilling Company: **Major Drilling Environmental, LLC**
Drilling Method: **Hollow Stem Auger**
Logged By: **David Lamadrid**
Sampling Method: **See legend for explanation of sample types**

Date Started: **8/20/10**
Date Ended: **8/20/10**
Boring Diameter: **10-inch**

Elevation: **147.3 ft.**
Depth to Water: **15.5 ft.**
Total Depth: **26.5 ft.**

STANDARD_LOG RLF_HSC MONITORING WELL LOGS.GPJ STD_LOG.GDT 2/23/11

# Piezometers

# LOG OF EXPLORATORY BORING

PROJECT NAME **Remedial Investigation**
LOCATION **Riverbend Landfill; McMinnville, Oregon**
DRILLED BY **GeoTech Explorations**
DRILL METHOD **Hollow Stem Auger**
LOGGED BY **Craig D. Fanshier**

BORING NO. **MW-3A**
PAGE **1 OF 2**
GROUND ELEV. **138.20'**
TOTAL DEPTH **35.00'**
DATE COMPLETED **06/23/93**

| RECOVERY PERCENT | POCKET PENETROMETER (Tons/SF) | PENETRATION (Blows/Ft) | GROUND WATER LEVELS | DEPTH IN FEET | SAMPLES | WELL DETAILS | LITHOLOGIC COLUMN | LITHOLOGIC DESCRIPTION |
|---|---|---|---|---|---|---|---|---|
| 100 | | | | | | | | **0 to 8.5 feet: SILTY CLAY (CL)**, dark brown (10YR 3/3), evenly colored; medium plasticity fines; stiff to very stiff; damp. (COMPACTED LANDFILL ENGINEERED BERM). |
| 100 | 0.5 | | | | | | | @ 3.5 to 7.0 feet: weakly developed platy soil peds. |
| | 1.5 | | | 5 | | | | @ 4.5 feet: traces reddish brown mottling, horizontally oriented. |
| | 1.5 | | | | | | | |
| | 3.5 | | | | | | | @ 6.5 feet: very stiff. |
| | 4 | | | | | | | @ 7.0 to 8.0 feet: two dark grayish brown intervals, approximately 2-inches thick. |
| | 4 | | | | | | | |
| 100 | 2.5 | | | | | | | **8.5 to 10.4 feet: CLAYEY SILT (ML)**, dark yellowish brown (10YR 4/4); 97% low to medium plasticity fines; 3% fine sand; soil is crumbly; very stiff; damp to moist. |
| | 2.5 | | | 10 | | | | |
| | 2.5 | | | | | | | **10.4 to 13.0 feet: SILTY CLAY (CL)**, dark greenish gray (5G 4/1); medium plasticity fines; stiff; moist. |
| | 1.5 | | | | | | | |
| | 1.5 | | | | | | | |
| | 1.5 | | ▽ 6/23/93 | | | | | @ 12.5 feet: moist to wet. |
| | 1.5 to 2.5 | | | | | | | **13.0 to 13.75 feet: SANDY SILT (ML)**, dark yellowish brown (10YR 4/4); 85-90% low to medium plasticity fines; 3% fine sand, subrounded, micaceous; stiff; wet. |
| 100 | 3 | | | | | | | |
| | 2 | | | 15 | | | | **13.75 to 28.5 feet: SILTY CLAY (CL)**, dark gray with some dark grayish brown mottling; medium plasticity fines, some silt content; blocky soil peds, crumbly soil; trace macropores; stiff to very stiff; moist along soil peds; easy drilling. |
| | 2 | | | | | | | |
| | 2 | | ▽ 8/10/93 | | | | | |
| | 1.5 to 2.5 | | | | | | | |
| 100 | 3 | | | 20 | | | | |

## REMARKS

Drilled w/8" OD (4.25" ID) HSA. Samples continuously collected w/5'-long, 3" ID split barrel and 1.5'-long, 3" OD split spoon fitted w/rings. A 2" PVC monitoring well was constructed in the borehole. Well construction information presented in Well Details. See explanation for definition of symbols.

# LOG OF EXPLORATORY BORING

PROJECT NAME **Remedial Investigation**
LOCATION **Riverbend Landfill; McMinnville, Oregon**
DRILLED BY **GeoTech Explorations**
DRILL METHOD **Hollow Stem Auger**
LOGGED BY **Craig D. Fanshier**

BORING NO. **MW-3A**
PAGE **2 OF 2**
GROUND ELEV. **138.20'**
TOTAL DEPTH **35.00'**
DATE COMPLETED **06/23/93**

| RECOVERY PERCENT | POCKET PENETROMETER (Tons/SF) | PENETRATION (Blows/Ft) | GROUND WATER LEVELS | DEPTH IN FEET | SAMPLES | WELL DETAILS | LITHOLOGIC COLUMN | LITHOLOGIC DESCRIPTION |
|---|---|---|---|---|---|---|---|---|
| 100 | 3 | | | | | | | **13.75 to 28.5 feet: SILTY CLAY (CL), continued.** |
| | 1.5 | | | | | | | @ 20.0 feet: color changes to dark brown (10Y$ 4/3), with 30% light gray mottling, 5% rust red mottling; trace fine sand, some mica; weakly developed blocky soil peds; approximately two small macropore per foot of core; moist to wet; free water along vertical soil ped fractures. |
| | 2.5 | | | | | | | @ 21.0 to 25.5 feet: soft to stiff. |
| | 1.5 to 2.5 | | | | | | | @ 23.5 to 24.0 feet: wet along vertical soil ped fractures. |
| | 1 | | | | | | | @ 24.0 to 26.8 feet: brown and gray mottling; 5% fine sand; soil is crumbly. |
| | 0.75 | | | 25 | | | | |
| | 1 | | | | | | | @ 26.5 to 28.5 feet: soil is firmer. |
| | 2.5 | | | | | | | @ 27.0 to 28.5 feet: color changes to a blue gray (5B 6/1), and is light gray brown along open soil peds, some rust reddish staining along soil ped fractures (iron oxide?), trace black staining along relic root traces; medium to highly plasticity fines; 1- to 1.5-inch blocky soil peds. |
| | 2.5 | | | | | | | **28.5 to 35.0 feet: CLAY (CL), bluish gray (5B 5/1), with 15% strong reddish brown mottling along ped fractures; medium to high plasticity fines; very few macropores; very stiff; moist to wet; drilling is easy, sample in core barrel is hard to cut open with sampling trowel.** |
| | 2 | | | 30 | | | | |
| | 2.5 | | | | | | | |
| | 2.25 | | | | | | | |
| | 2.25 | | | | | | | |
| | 2.25 | | | | | | | |
| | 1.5 | | | | | | | |
| | 1 | | | | | | | |
| | 1.5 | | | 35 | | | | **BORING TERMINATED AT 35.0 FEET.** |
| | | | | 40 | | | | |

## REMARKS

Drilled w/8" OD (4.25" ID) HSA. Samples continuously collected w/5'-long, 3" ID split barrel and 1.5'-long, 3" OD split spoon fitted w/rings. A 2" PVC monitoring well was constructed in the borehole. Well construction information presented Well Details. See explanation for definition of symbols.

# WELL DETAILS

EMCON ASSOCIATES

CLIENT Riverbend Landfill Company, Inc.
PROJECT NUMBER 0258-001.24
PROJECT NAME MW-5 Remedial Investigation
LOCATION McMinnville, Oregon
WELL PERMIT NO. 54789

BORING / WELL NO. MW-3A
TOP OF CASING ELEV. 140.81
GROUND SURFACE ELEV. 138.2
DATUM Feet Mean Sea Level
INSTALLATION DATE 6/24/93

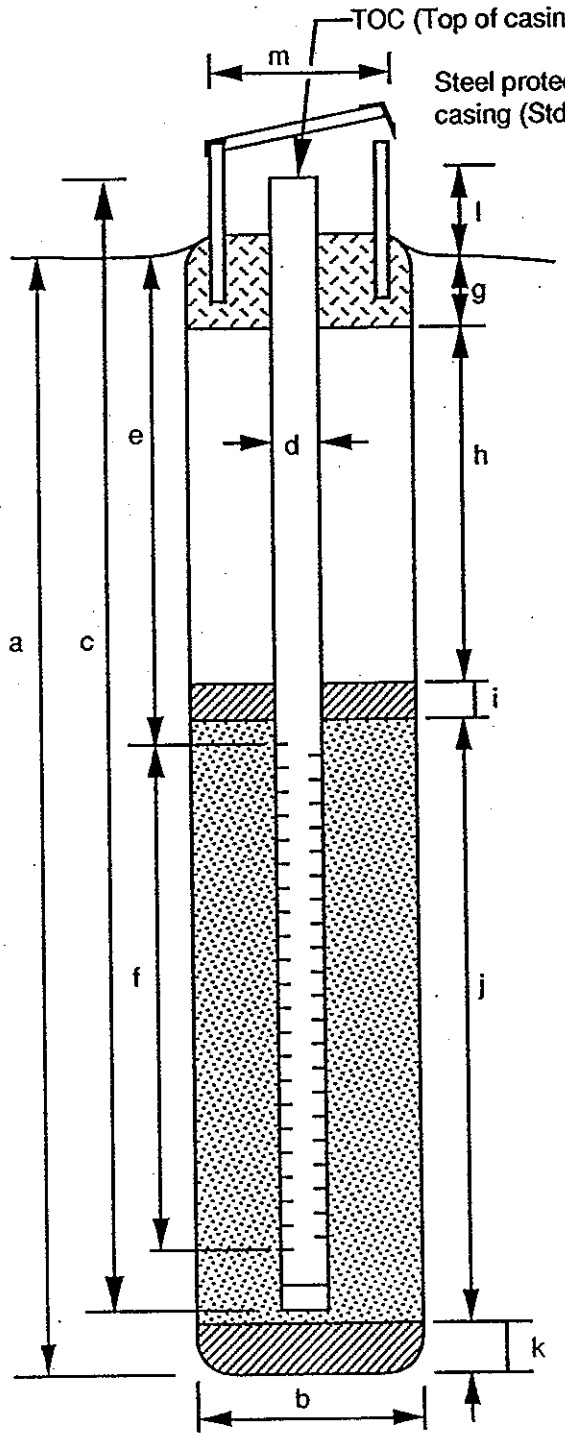


## EXPLORATORY BORING

a. Total depth 35.0 ft.
b. Diameter 8 in.
Drilling method Hollow Stem Auger

## WELL CONSTRUCTION

c. Total casing length 37.5 ft.
Material Schedule 40 PVC
d. Diameter 2 in.
e. Depth to top perforations 24.3 ft.
f. Perforated length 9.5 ft.
Perforated interval from 24.3 to 33.8 ft.
Perforation type Machine Slotted
Perforation size 0.010 Inches
g. Surface seal 2.2 ft.
Material Concrete
h. Backfill NA ft.
Material NA
i. Seal 18.8 ft.
Material Bentonite Chips
j. Gravel pack 14.0 ft.
Gravel pack interval from 21.0 to 35.0 ft.
Material 10-20 Gradation Sand
k. Bottom seal/fill NA ft.
Material NA
l. Casing stickup 2.5 ft.
m. Protective casing diameter 6.5 in.

Prepared by: Craig Fanshier
Reviewed by: Craig D. Fanshier Date: 10/1/93

Rev. 7/23/91
Ventura Mac 4

# LOG OF EXPLORATORY BORING

PROJECT NAME Remedial Investigation
LOCATION Riverbend Landfill; McMinnville, Oregon
DRILLED BY GeoTech Explorations
DRILL METHOD Hollow Stem Auger
LOGGED BY Craig D. Fanshier

BORING NO. MW-3B
PAGE 1 OF 7
GROUND ELEV. 137.80'
TOTAL DEPTH 68.50'
DATE COMPLETED 06/28/93

| RECOVERY PERCENT | POCKET PENETRO-METER (Tons/SF) | PENETRATION (Blows/Ft) | GROUND WATER LEVELS | DEPTH IN FEET | SAMPLES | WELL DETAILS | LITHOLOGIC COLUMN | LITHOLOGIC DESCRIPTION |
|---|---|---|---|---|---|---|---|---|
| 97 | 3 | | | | | | | **0 to 8.0 feet: SILTY CLAY (CL)**, dark brown (10YR 4/3), evenly colored; medium plasticity fines; some small rootlets; soft to stiff; dry to damp. |
| | 4.5 | | | | | | | |
| | 2.5 | | | | | | | |
| 100 | 1 | | | | | | | |
| | 2 | | | 5 | | | | |
| | 2 | | | | | | | @ 6.5 feet: approximately 3-inches thick, gray; very soft. |
| | 3.5 | | | | | | | |
| | 4.5 | | | | | | | @ 7.5 feet: approximately 3 to 5-inch thick, gray; very soft. |
| | 3 | | | | | | | **8.0 to 13.3 feet: CLAYEY SILT (ML)**, dark brown (10YR 4/3), evenly colored; low plasticity fines, with some micas; trace (less than 5%) fine sand; stiff; damp. |
| 100 | 3 | | | | | | | |
| | 2 | | | 10 | | | | Note: easy drilling. |

## REMARKS

Drilled w/10" OD (6.5" ID) HSA. Samples continuously collected w/5'-long, 3" ID split barrel and 1.5'-long, 3" OD split spoon fitted w/rings. A 2" PVC monitoring well was constructed in the borehole. Well construction information presented in Well Details. See explanation for definition of symbols.

# LOG OF EXPLORATORY BORING

PROJECT NAME Remedial Investigation
LOCATION Riverbend Landfill; McMinnville, Oregon
DRILLED BY GeoTech Explorations
DRILL METHOD Hollow Stem Auger
LOGGED BY Craig D. Fanshier

BORING NO. MW-3B
PAGE 2 OF 7
GROUND ELEV. 137.80'
TOTAL DEPTH 68.50'
DATE COMPLETED 06/28/93

| RECOVERY PERCENT | POCKET PENETRO-METER (Tons/SF) | PENETRATION (Blows/Ft) | GROUND WATER LEVELS | DEPTH IN FEET | SAMPLES | WELL DETAILS | LITHOLOGIC COLUMN | LITHOLOGIC DESCRIPTION |
|---|---|---|---|---|---|---|---|---|
| | 1.5 | | | | | | | 8.0 to 13.3 feet: CLAYEY SILT (ML), continued.<br>@ 10.0 feet: moist. |
| | 1 | | | | | | | @ 12.0 feet: approximately 0.4-foot thick, dark brownish gray zone. |
| | 1.5 | | | | | | | |
| 100 | 3.5 | | | | | | | 13.3 to 22.0 feet: SILTY CLAY (CL), dark olive gray (5Y 3/2) to black (5Y 2.5/1); medium plasticity fines; very stiff; damp. |
| | 4 | | | 15 | | | | |
| | 2.5 | | ▽ 6/25/93 | | | | | @ 16.0 feet: wet along soil ped surfaces. |
| | 3 | | | | | | | @ 17.0 feet: color changes to dark brown (10YR 3/3); macropores present; soil peds develop a prismatic vertical blocky appearance. |
| | 1.5 | | | | | | | @ 17.5 to 18.5 feet: gray and approximately 20% brown mottling; stiff; wet on soil peds. |
| 100 | 1.5 | | ▽ 8/10/93 | | | | | @ 18.5 feet: wet. |
| | 2.5 | | | 20 | | | | |

## REMARKS

Drilled w/10" OD (6.5" ID) HSA. Samples continuously collected w/5'-long, 3" ID split barrel and 1.5'-long, 3" OD split spoon fitted w/rings. A 2" PVC monitoring well was constructed in the borehole. Well construction information presented Well Details. See explanation for definition of symbols.

# LOG OF EXPLORATORY BORING

PROJECT NAME **Remedial Investigation**
LOCATION **Riverbend Landfill; McMinnville, Oregon**
DRILLED BY **GeoTech Explorations**
DRILL METHOD **Hollow Stem Auger**
LOGGED BY **Craig D. Fanshier**

BORING NO. **MW-3B**
PAGE **3 OF 7**
GROUND ELEV. **137.80'**
TOTAL DEPTH **68.50'**
DATE COMPLETED **06/28/93**

| RECOVERY PERCENT | POCKET PENETRO-METER (Tons/SF) | PENETRATION (Blows/Ft) | GROUND WATER LEVELS | DEPTH IN FEET | SAMPLES | WELL DETAILS | LITHOLOGIC COLUMN | LITHOLOGIC DESCRIPTION |
|---|---|---|---|---|---|---|---|---|
| | 1.5 | | | | | | | **13.3 to 22.0 feet: SILTY CLAY (CL)**, continued. @ 20.0 feet: silt content is variable; moist to wet, free water inside macropores. |
| | 2.5 | | | | | | | |
| | 2 | | | | | | | **22.0 to 27.0 feet: CLAYEY SILT (ML)**, brown (10YR 4/3), with 10-30% gray mottling, trace rust red mottling; 95% low to medium plasticity fines; 5% fine sand; several 0.5 to 1.0 foot zones of SANDY SILT (ML), with 20% fine sand; firm to stiff; few to some small macro pores; soil structure forms 1/4-inch horizontal partings; moderately developed platy soil peds which are hard and crumbly; damp to wet, some zones are damp to moist while others are moist to wet. @ 24.0 to 27.0 feet: rust red mottles are approximately 1/2-inch diameter. |
| | 1.5 | | | | | | | |
| 100 | 1.5 | | | | | | | |
| | 1.5 | | | 25 | | | | |
| | 1 | | | | | | | |
| | 1.5 | | | | | | | @ 27.0 feet: contact with underlying clay unit is distinctively sharp. |
| | 1.5 | | | | | | | **27.0 to 38.5 feet: CLAY (CL)**, dark olive gray (5Y 3/2), with greenish tint, approximately 50% brown and trace black mottling; medium to high plasticity fines; prismatic soil peds, smooth and shiny soil ped partings; stiff; moist; drilling is harder and sticky. @ 36.5 to 38.5 feet: 50% brown and trace black mottling; medium to high plasticity fines; approximately 5-15% 1/4-inch gravels, rounded, matrix supported, coarsening downward; stiff; moist. |
| | 2.5 | | | | | | | |
| 100 | 1.5 | | | | | | | |
| | 2 | | | 30 | | | | |

## REMARKS

Drilled w/10" OD (6.5" ID) HSA. Samples continuously collected w/5'-long, 3" ID split barrel and 1.5'-long, 3" OD split spoon fitted w/rings. A 2" PVC monitoring well was constructed in the borehole. Well construction information presented in Well Details. See explanation for definition of symbols.

# LOG OF EXPLORATORY BORING

PROJECT NAME Remedial Investigation
LOCATION Riverbend Landfill; McMinnville, Oregon
DRILLED BY GeoTech Explorations
DRILL METHOD Hollow Stem Auger
LOGGED BY Craig D. Fanshier

BORING NO. MW-3B
PAGE 4 OF 7
GROUND ELEV. 137.80'
TOTAL DEPTH 68.50'
DATE COMPLETED 06/28/93

| RECOVERY PERCENT | POCKET PENETRO-METER (Tons/SF) | PENETRATION (Blows/Ft) | GROUND WATER LEVELS | DEPTH IN FEET | SAMPLES | WELL DETAILS | LITHOLOGIC COLUMN | LITHOLOGIC DESCRIPTION |
|---|---|---|---|---|---|---|---|---|
| | 2.5 | | | | | | | 27.0 to 38.5 feet: CLAY (CL), continued. |
| | 2 | | | | | | | |
| | 1.5 | | | | | | | |
| 100 | 1.5 | 51 | | | | | | |
| | | | | 35 | | | | |
| 100 | 1.5 | | | | | | | |
| | 1.5 | | | | | | | |
| | 2.5 | | | | | | | |
| | 1.5 | | | | | | | |
| 100 | | | | | | | | 38.5 to 40.0 feet: CLAYEY GRAVEL (GC), dark brown (7.5Y 4/4), 45% low to medium plasticity fines; 5% fine sand; 50% 1/8 to 1-inch gravels, rounded, low to medium sphericity, matrix supported; wet. |
| | | | | | | | | @ 39.5 to 40.0 feet: color grades to a very pale brown (10YR 7/4). |
| | | | | 40 | | | | |

## REMARKS

Drilled w/10" OD (6.5" ID) HSA. Samples continuously collected w/5'-long, 3" ID split barrel and 1.5'-long, 3" OD split spoon fitted w/rings. A 2" PVC monitoring well was constructed in the borehole. Well construction information presented Well Details. See explanation for definition of symbols.

# LOG OF EXPLORATORY BORING

PROJECT NAME Remedial Investigation
LOCATION Riverbend Landfill; McMinnville, Oregon
DRILLED BY GeoTech Explorations
DRILL METHOD Hollow Stem Auger
LOGGED BY Craig D. Fanshier

BORING NO. MW-3B
PAGE 5 OF 7
GROUND ELEV. 137.80'
TOTAL DEPTH 68.50'
DATE COMPLETED 06/28/93

| RECOVERY PERCENT | POCKET PENETRO-METER (Tons/SF) | PENETRATION (Blows/Ft) | GROUND WATER LEVELS | DEPTH IN FEET | SAMPLES | WELL DETAILS | LITHOLOGIC COLUMN | LITHOLOGIC DESCRIPTION |
|---|---|---|---|---|---|---|---|---|
| | 1.5 | | | | | | | 40.0 to 41.0 feet: CLAYEY SILT (ML), light olive brown (2.5Y 5/4); low to medium plasticity fines; stiff; wet. |
| | 1.5 | | | | | | | 41.0 to 42.0 feet: SILTY SAND (SM), light olive brown (2.5Y 5/4); 15% silt; 85% fine sand, moderately well sorted; appears loose to medium dense, wet. |
| | | | | | | | | 42.0 to 43.0 feet: SAND (SP), reddish brown (5YR 4/4); <10% low plasticity silts; 90% medium sand, subrounded to subangular, mixed lithologies of chert fragments and arkosic sands; appears dense to very dense; some 1/16 to 1/8-inch horizontal laminations; moist to wet; slightly cemented. |
| 40 | | | | | | | | 43.0 to 43.5 feet: GRAVELLY SANDS (SP), reddish brown (5YR 4/4), with iron oxide staining; 10% low plasticity fines; 75% medium sand subrounded to subangular, mixed lithologies of chert fragments and arkosic sands; 15% 3/8 to 2-inch gravels, angular to subrounded, basalt: dense to very dense; wet. |
| | | | | 45 | | | | 43.5 to 53.0 feet: SANDY GRAVEL (GP), reddish brown (5YR 4/4) to dark yellowish brown (10YR 3/6); 5-10% low plasticity fines; 20-30% medium to coarse sand, subangular; 60-75% fine to coarse gravels, subrounded to angular, low to medium sphericity; approximately 70% in point contact, the gravels are slightly to moderately imbricated, the matrix is firm to stiff and moderately binds the gravels together, several sand layers approximately 0.5 feet thick where graded (SW). |
| 10 | | | | | | | | @ 49.0 to 53.5 feet: very rough drilling, possible larger cobbles. |
| | | | | 50 | | | | |

## REMARKS

Drilled w/10" OD (6.5" ID) HSA. Samples continuously collected w/5'-long, 3" ID split barrel and 1.5'-long, 3" OD split spoon fitted w/rings. A 2" PVC monitoring well was constructed in the borehole. Well construction information presented in Well Details. See explanation for definition of symbols.

# LOG OF EXPLORATORY BORING

PROJECT NAME Remedial Investigation
LOCATION Riverbend Landfill; McMinnville, Oregon
DRILLED BY GeoTech Explorations
DRILL METHOD Hollow Stem Auger
LOGGED BY Craig D. Fanshier

BORING NO. MW-3B
PAGE 6 OF 7
GROUND ELEV. 137.80'
TOTAL DEPTH 68.50'
DATE COMPLETED 06/28/93

| RECOVERY PERCENT | POCKET PENETRO-METER (Tons/SF) | PENETRATION (Blows/Ft) | GROUND WATER LEVELS | DEPTH IN FEET | SAMPLES | WELL DETAILS | LITHOLOGIC COLUMN | LITHOLOGIC DESCRIPTION |
|---|---|---|---|---|---|---|---|---|
| | | | | | | | | 43.5 to 53.0 feet: SANDY GRAVEL (GP), continued. |
| 100 | | | | 55 | | | | 53.0 to 63.0 feet: SANDY GRAVEL (GM), dark greenish gray (5G 4/1); 10-20% low plasticity fines; 25-35% medium to coarse sand; 60% 3/8 to 3/4-inch gravels, subrounded to angular, poorly sorted, mostly basalts; several 1 to 3-inch zones firmly cemented; appears loose; wet.<br>@ 53.5 to 58.5 feet: easier drilling. |
| 100 | | | | 60 | | | | @ 59.0 feet: gravels mostly 3/8 to 1/2 inch; several 1 to 1.5-inch thick firmly cemented zones. |

## REMARKS

Drilled w/10" OD (8.5" ID) HSA. Samples continuously collected w/5'-long, 3" ID split barrel and 1.5'-long, 3" OD split spoon fitted w/rings. A 2" PVC monitoring well was constructed in the borehole. Well construction information presented Well Details. See explanation for definition of symbols.

# LOG OF EXPLORATORY BORING

PROJECT NAME Remedial Investigation
LOCATION Riverbend Landfill; McMinnville, Oregon
DRILLED BY GeoTech Explorations
DRILL METHOD Hollow Stem Auger
LOGGED BY Craig D. Fanshier

BORING NO. MW-3B
PAGE 7 OF 7
GROUND ELEV. 137.80'
TOTAL DEPTH 68.50'
DATE COMPLETED 06/28/93

| RECOVERY PERCENT | POCKET PENETRO-METER (Tons/SF) | PENETRATION (Blows/Ft) | GROUND WATER LEVELS | DEPTH IN FEET | SAMPLES | WELL DETAILS | LITHOLOGIC COLUMN | LITHOLOGIC DESCRIPTION |
|---|---|---|---|---|---|---|---|---|

**53.0 to 63.0 feet: SANDY GRAVEL (GM),** continued.
@ 60.0 feet: 20-35% low plasticity fines (silt); 20-40% medium sand; 50% 3/8 to 1/2-inch gravels, appears rounded; dense, wet.

**63.0 to 63.5 feet: SAND (SP),** dark greenish gray (5G 4/1); <5% fines, 95% medium sand, well sorted; wet.

BORING TERMINATED AT 63.5 FEET.

65

70

## REMARKS

Drilled w/10" OD (6.5" ID) HSA. Samples continuously collected w/5'-long, 3" ID split barrel and 1.5'-long, 3" OD split spoon fitted w/rings. A 2" PVC monitoring well was constructed in the borehole. Well construction information presented in Well Details. See explanation for definition of symbols.

EMCON NORTHWEST

# WELL DETAILS

CLIENT Riverbend Landfill Company, Inc.
PROJECT NUMBER 0258-001.24
PROJECT NAME Remedial Investigation
LOCATION McMinnville, Oregon
WELL PERMIT NO. 54789

BORING / WELL NO. MW-3B
TOP OF CASING ELEV. 140.57
GROUND SURFACE ELEV. 137.80
DATUM Feet-Mean Sea Level
INSTALLATION DATE 6/28/93

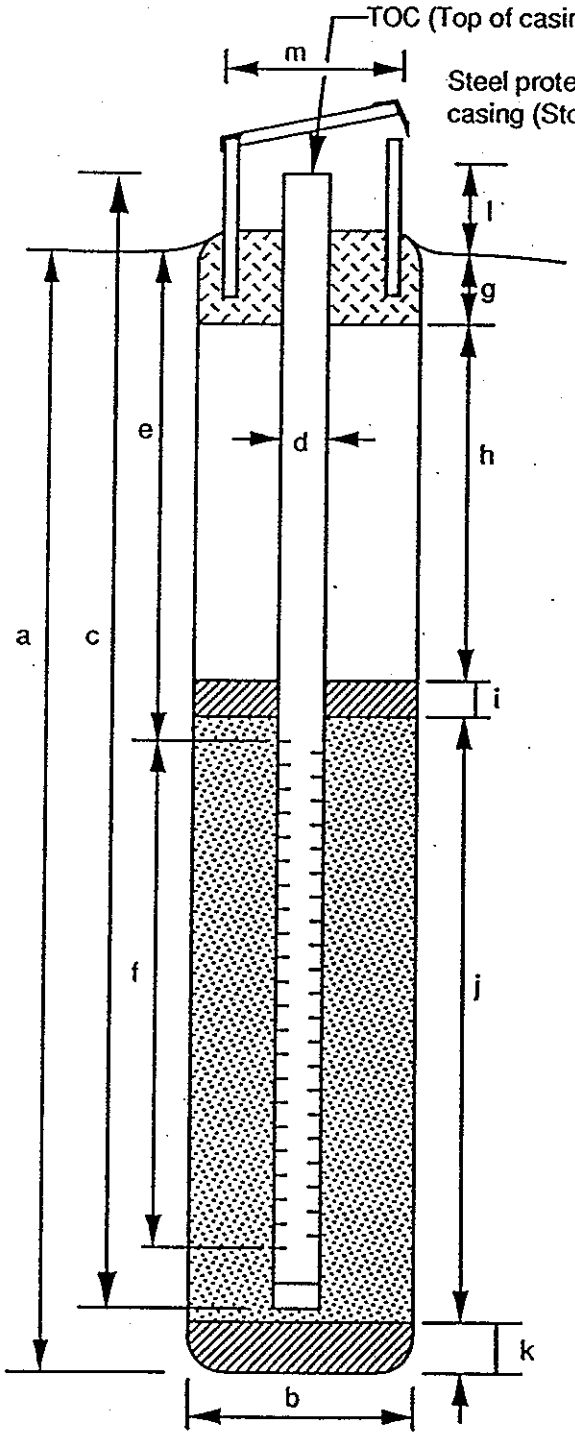


## EXPLORATORY BORING

a. Total depth 63.5 ft.
b. Diameter 10.5 in.
Drilling method Hollow Stem Auger

## WELL CONSTRUCTION

c. Total casing length 57.8 ft.
Material Schedule 40 PVC
d. Diameter 2 in.
e. Depth to top perforations 45.3 ft.
f. Perforated length 9.5 ft.
Perforated interval from 45.3 to 54.8 ft.
Perforation type Machine Slotted
Perforation size 0.010 Inches
g. Surface seal (0 to 2.0) 2.0 ft.
Material Concrete
h. Backfill (2.0 to 36.8) 34.8 ft.
Material High Solids Bentonite Grout
i. Seal (36.8 to 42.0) 5.2 ft.
Material Bentonite Chips
j. Gravel pack 14.0 ft.
Gravel pack interval from 42.0 to 56.0 ft.
Material 10-20 Gradation Sand
k. Bottom seal/fill (56.0 to 63.5) 7.5 ft.
Material Bentonite Chips
l. Casing stickup 2.8 ft.
m. Protective casing diameter 6.5 in.

Prepared by: Craig Fanshier
Reviewed by: Craig R Fanshier Date: 10/1/93

Ventura Mac 4 Rev. 7/23/91

# LOG OF EXPLORATORY BORING

PROJECT NAME **Remedial Investigation**
LOCATION **Riverbend Landfill; McMinnville, Oregon**
DRILLED BY **GeoTech Explorations**
DRILL METHOD **Hollow Stem Auger**
LOGGED BY **Craig D. Fanshier**

BORING NO. **MW-4A**
PAGE **1 OF 2**
GROUND ELEV. **139.20'**
TOTAL DEPTH **71.80'**
DATE COMPLETED **06/10/93**

| RECOVERY PERCENT | POCKET PENETRO-METER (Tons/SF) | PENETRATION (Blows/Ft) | GROUND WATER LEVELS | DEPTH IN FEET | SAMPLES | WELL DETAILS | LITHOLOGIC COLUMN | LITHOLOGIC DESCRIPTION |
|---|---|---|---|---|---|---|---|---|
| 75 | | | | | | | | **0 to 9.5 feet: SILTY CLAY (CL)**, dark grayish brown (10YR 4/2), trace reddish brown mottling; medium plasticity fines; some small rootlets; stiff; damp. |
| | 2.5 | | | | | | | |
| | 3 | | | | | | | |
| | 1 | | | | | | | |
| | 1 | | | | | | | @ 3.5 to 5.3 feet: color changes to gray; wet. |
| 100 | 4.5 | | | | | | | @ 4.5 to 8.0 feet: very stiff to hard. |
| | 4.5 | | | 5 | | | | |
| | 4.5 | | | | | | | @ 5.3 feet: color changes to light brown with 10-30% gray mottling. |
| | 4 | | | | | | | @ 6.5 to 7.5 feet: silt content increases. |
| | 3.5 | | | | | | | |
| | 3 | | | | | | | |
| | 2 | | | | | | | |
| | 2.5 | | | | | | | |
| | 1.5 | | | | | | | |
| 100 | 1.5 | | | | | | | **9.5 to 16.5 feet: CLAYEY SILT (ML)**, dark grayish brown (10YR 4/2), with 5-10% gray mottling 1/2-inch diameter; low to medium plasticity fines; trace fine sand, micaceous; weakly developed platy soil peds; stiff, damp. |
| | 1 to 1.5 | | | 10 | | | | |
| | 1 | | | | | | | @ 12.5 feet: less gray mottling, rust red mottling starts. |
| | 2 to 3 | | | | | | | @ 13.0 feet: all brown. |
| | 3 | | | | | | | @ 13.5 to 16.0 feet: dark brown (10YR 3/2), very little to no mottling; low plasticity fines; trace mica; very stiff; damp. |
| | 4.5 | | | | | | | |
| | 4.5 | | | | | | | |
| 100 | | 28 | | 15 | | | | @ 15.5 to 16.0 feet: transition to next soil unit indicated by increasing greenish gray crumbly soil with some decayed organic material. |
| 100 | 1 | | | | | | | **16.5 to 36.2 feet: SILTY CLAY (CL)**, grayish brown (10YR 4/2), very little mottling; medium plasticity fines; stiff to very stiff; damp to moist. |
| | 2 to 2.5 | | | | | | | |
| | 1.5 to 2 | | | | | | | @ 17.0 to 17.5 feet: approximately 50% brown mottling. |
| | 1.5 to 2 | | | | | | | |
| | 3 | | | | | | | @ 17.5 to 21.5 feet: 95% gray, very little mottling; silt content increases. |
| | 3 | | | | | | | |
| | 3.5 to 4 | | | | | | | |
| 100 | | | | 20 | | | | |

## REMARKS

Drilled w/8" OD (4.25" ID) HSA. Samples continuously collected w/5'-long, 3" ID split barrel and 1.5'-long, 3" OD split spoon fitted w/rings. A 2" PVC monitoring well was constructed in the borehole. Well construction information presented in Well Details. See explanation for definition of symbols.

# LOG OF EXPLORATORY BORING

PROJECT NAME Remedial Investigation
LOCATION Riverbend Landfill; McMinnville, Oregon
DRILLED BY GeoTech Explorations
DRILL METHOD Hollow Stem Auger
LOGGED BY Craig D. Fanshier

BORING NO. MW-4A
PAGE 2 OF 2
GROUND ELEV. 139.20'
TOTAL DEPTH 71.80'
DATE COMPLETED 06/10/93

| RECOVERY PERCENT | POCKET PENETRO-METER (Tons/SF) | PENETRATION (Blows/Ft) | GROUND WATER LEVELS | DEPTH IN FEET | SAMPLES | WELL DETAILS | LITHOLOGIC COLUMN | LITHOLOGIC DESCRIPTION |
|---|---|---|---|---|---|---|---|---|
| | 1.5 | | | | | | | 16.5 to 36.2 feet: SILTY CLAY (CL), continued. |
| | 1.75 | | 5/25/93 | | | | | @ 21.5 feet: low to medium plasticity fines; moderately developed granular to blocky soil peds; some small macropores; trace very fine roothairs; wet. |
| | 2 | | | | | | | |
| | 2.5 | | | | | | | |
| | 2.5 | | | | | | | |
| | 3 | | | | | | | |
| 100 | 1.5 to 2 | | | 25 | | | | @ 25.0 to 27.0 feet: approximately 2% of soil matrix contains black wood fragment; some small pin-hole size macropores. |
| | 2.5 | | | | | | | |
| | 2.5 | | | | | | | |
| | 2.5 | | | | | | | |
| | 2 | | | | | | | @ 29.0 feet: free water in macropores. |
| 93 | 1.5 | 22 | 8/10/93 | 30 | | | | |
| 100 | 2.5 to 3.5 | | | | | | | @ 31.0 to 34.0 feet: color changes to light brown with 10-30% gray mottling; medium to high plasticity clay; abundant macropores up to 1/4-inch. |
| | 3.5 | | | | | | | |
| | 3.5 | | | | | | | |
| | 3.5 | | | | | | | |
| | 3.5 | | | | | | | @ 34.0 to 36.0 feet: increases silt content; soil in core barrel is crumbly. |
| 100 | 1.5 | | | 35 | | | | |
| | 1.5 | | | | | | | |
| | 1.5 | | | | | | | |
| | | | | | | | | BORING TERMINATED AT 36.2 FEET. |
| | | | | 40 | | | | |

## REMARKS

Drilled w/8" OD (4.25" ID) HSA. Samples continuously collected w/5'-long, 3" ID split barrel and 1.5'-long, 3" OD split spoon fitted w/rings. A 2" PVC monitoring well was constructed in the borehole. Well construction information presented in Well Details. See explanation for definition of symbols.

# WELL DETAILS

EMCON ASSOCIATES

CLIENT Riverbend Landfill Company, Inc.
PROJECT NUMBER 0258-001.24
PROJECT NAME MW-5 Remedial Investigation
LOCATION McMinnville, Oregon
WELL PERMIT NO. 52006

BORING / WELL NO. MW-4A
TOP OF CASING ELEV. 142.31
GROUND SURFACE ELEV. 139.5
DATUM Feet Mean Sea Level
INSTALLATION DATE 5/25/93

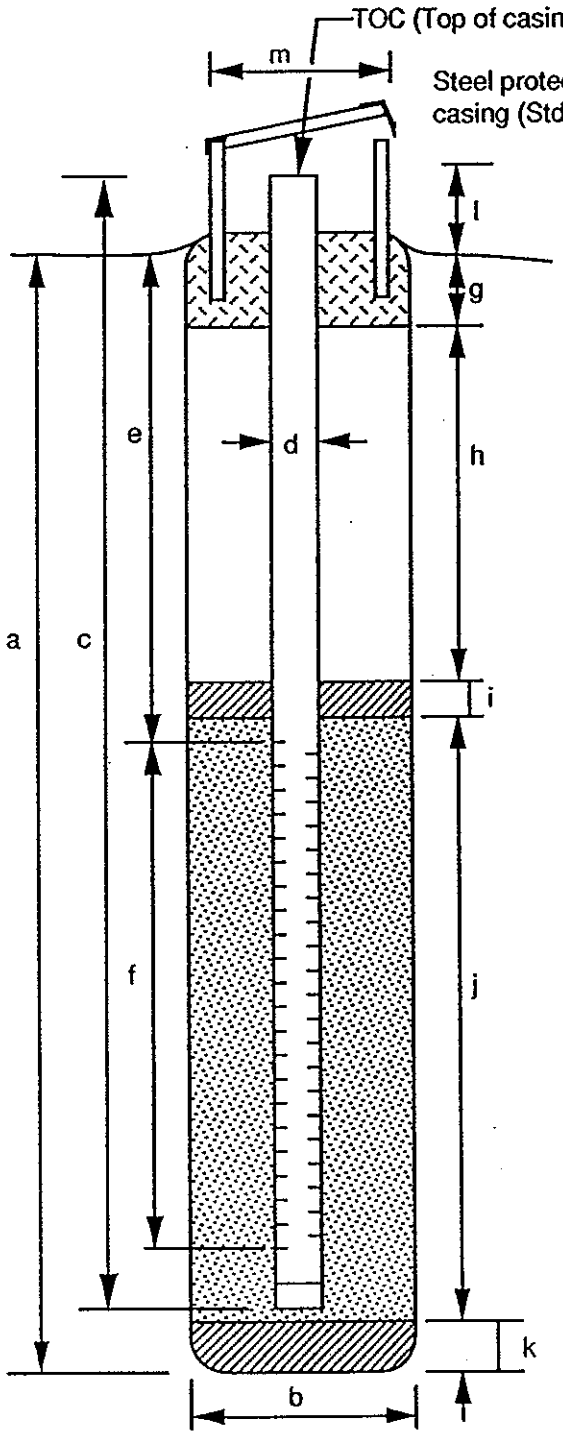


## EXPLORATORY BORING

a. Total depth 36.2 ft.
b. Diameter 8 in.
Drilling method Hollow Stem Auger

## WELL CONSTRUCTION

c. Total casing length 38.31 ft.
Material Schedule 40 PVC
d. Diameter 2 in.
e. Depth to top perforations 26.3 ft.
f. Perforated length 9.5 ft.
Perforated interval from 26.3 to 35.8 ft.
Perforation type Machine Slotted
Perforation size 0.010 Inches
g. Surface seal 2.0 ft.
Material Concrete
h. Backfill NA ft.
Material NA
i. Seal 20.41 ft.
Material Bentonite Chips
j. Gravel pack 13.75 ft.
Gravel pack interval from 22.4 to 36.2 ft.
Material 10-20 Gradation Sand
k. Bottom seal/fill NA ft.
Material NA
l. Casing stickup 2.81 ft.
m. Protective casing diameter 6.5 in.

Prepared by: Craig Fanshier
Reviewed by: Craig D. Fanshier Date: 10/1/93

Rev. 7/23/91
Ventura Mac-4

# LOG OF EXPLORATORY BORING

PROJECT NAME Remedial Investigation
LOCATION Riverbend Landfill; McMinnville, Oregon
DRILLED BY GeoTech Explorations
DRILL METHOD Hollow Stem Auger
LOGGED BY Craig D. Fanshier

BORING NO. MW-4B
PAGE 1 OF 8
GROUND ELEV. 137.80'
TOTAL DEPTH 71.80'
DATE COMPLETED 06/10/93

| RECOVERY PERCENT | POCKET PENETRO-METER (Tons/SF) | PENETRATION (Blows/Ft) | GROUND WATER LEVELS | DEPTH IN FEET | SAMPLES | WELL DETAILS | LITHOLOGIC COLUMN | LITHOLOGIC DESCRIPTION |
|---|---|---|---|---|---|---|---|---|
| 88 | 4 to 4.5 | | | | | | | **0 to 13.0 feet: SILTY CLAY (CL)**, dark brown (10YR 3/3); medium plasticity fines; no sands; some small fine roots; no developed soil peds; soft to firm; damp. |
| | 0.5 | | | | | | | |
| | 1 | | | | | | | |
| | 1.5 | | | | | | | @ 3.3 to 3.5 feet: slight reddish brown mottling.<br>@ 3.5 feet: greenish gray (5G 4/1). |
| 100 | | | | 5 | | | | |
| | 4.5 | | | | | | | @ 5.5 feet: dark yellowish brown (10YR 4/4); medium plasticity fines, silt content increases; no macropores; some horizontal bedding; stiff; moist to damp (wetting front?). |
| | 2 | | | | | | | |
| | 1 | | | | | | | |
| | 1 | | | | | | | @ 8.0 feet: several 1-inch diameter gray mottling. |
| | 1.5 | | | | | | | |
| 100 | 2 | | | 10 | | | | @ 9.5 to 13.0 feet: stiff; damp. |

**REMARKS**

Drilled w/10" OD (6.5" ID) HSA. Samples continuously collected w/5'-long, 3" ID split barrel and 1.5'-long, 3" OD split spoon fitted w/rings. Bedrock was cored w/NX (3.5" O.D.) diamond core. A 2" PVC monitoring well was constructed in the borehole. Well construction information presented in Well Details. See explanation for definition of symbols.

# LOG OF EXPLORATORY BORING

PROJECT NAME Remedial Investigation
LOCATION Riverbend Landfill; McMinnville, Oregon
DRILLED BY GeoTech Explorations
DRILL METHOD Hollow Stem Auger
LOGGED BY Craig D. Fanshier

BORING NO. MW-4B
PAGE 2 OF 8
GROUND ELEV. 137.80'
TOTAL DEPTH 71.80'
DATE COMPLETED 06/10/93

| RECOVERY PERCENT | POCKET PENETRO-METER (Tons/SF) | PENETRATION (Blows/Ft) | GROUND WATER LEVELS | DEPTH IN FEET | SAMPLES | WELL DETAILS | LITHOLOGIC COLUMN | LITHOLOGIC DESCRIPTION |
|---|---|---|---|---|---|---|---|---|
| | 1.5 | | | | | | | **0 to 13.0 feet: SILTY CLAY (CL)**, continued.<br>@ 10.0 feet: some gray mottling.<br><br>@ 11.0 to 12.0 feet: 15-25% rust red mottling. |
| | 1.5 | | | | | | | |
| | 3 | | | | | | | |
| | 2.5 | | | | | | | |
| | 4.5 | | | | | | | **13.0 to 16.5 feet: CLAYEY SILT (ML)**, dark yellowish brown (10YR 4/4); low to medium plasticity fines; very stiff to hard; damp. |
| 100 | 4.5 | | | 15 | | | | |
| | 0.5 | | | | | | | |
| | 1.5 | | | | | | | |
| | 1.5 | | | | | | | **16.5 to 31.5 feet: SILTY CLAY (CL)**, 50% dark yellowish brown (10YR 4/4) and 50% olive dark olive gray (5Y 3/2), trace black and rust red mottling; medium plasticity fines; some macro pores; stiff to very stiff; damp. |
| | 1 | | | | | | | |
| | 3 | | | | | | | @ 18.5 to 21.5 feet: dark greenish gray (5G 4/1). |
| 100 | | | | 20 | | | | |

## REMARKS

Drilled w/10" OD (6.5" ID) HSA. Samples continuously collected w/5'-long, 3" ID split barrel and 1.5'-long, 3" OD split spoon fitted w/rings. Bedrock was cored w/NX (3.5" O.D.) diamond core. A 2" PVC monitoring well was constructed in th borehole. Well construction information presented in Well Details. See explanation for definition of symbols.

# LOG OF EXPLORATORY BORING

PROJECT NAME **Remedial Investigation**
LOCATION **Riverbend Landfill; McMinnville, Oregon**
DRILLED BY **GeoTech Explorations**
DRILL METHOD **Hollow Stem Auger**
LOGGED BY **Craig D. Fanshier**

BORING NO. **MW-4B**
PAGE **3 OF 8**
GROUND ELEV. **137.80'**
TOTAL DEPTH **71.80'**
DATE COMPLETED **06/10/93**

| RECOVERY PERCENT | POCKET PENETRO-METER (Tons/SF) | PENETRATION (Blows/Ft) | GROUND WATER LEVELS | DEPTH IN FEET | SAMPLES | WELL DETAILS | LITHOLOGIC COLUMN | LITHOLOGIC DESCRIPTION |
|---|---|---|---|---|---|---|---|---|
| | 2.5 | | | | | | | **16.5 to 31.5 feet: SILTY CLAY (CL), continued.** |
| | 2.5 | | | | | | | @ 21.5 feet: color transitions back to 20% brown and 80% gray mottling. |
| | 2.5 | | | | | | | |
| | 2.5 | | | | | | | |
| | 3 | | | | | | | @ 23.5 to 31.5 feet: traces of black carbonized plant and wood fragments; loose vertical columnar soil peds; less macropores than the units above; damp to moist, moisture along ped surfaces. |
| 100 | 2.5 | | | | | | | |
| | 3 | | | 25 | | | | |
| | 2.5 | | | | | | | |
| | 2.5 | | | | | | | |
| | 3 | | | | | | | |
| | | | 6/10/93 ▽ | | | | | |
| | 2.5 | | ▼ | | | | | |
| | | | 8/10/93 | | | | | |
| | 3.5 | | | | | | | @ 28.5 feet: 80% dark olive gray (5Y 3/2), with 10-20% reddish brown mottling; moist to wet along soil ped surfaces. |
| | 3.5 | | | | | | | |
| 100 | 2.25 | | | | | | | |
| | | | | 30 | | | | |

## REMARKS

Drilled w/10" OD (6.5" ID) HSA. Samples continuously collected w/5'-long, 3" ID split barrel and 1.5'-long, 3" OD split spoon fitted w/rings. Bedrock was cored w/NX (3.5" O.D.) diamond core. A 2" PVC monitoring well was constructed in the borehole. Well construction information presented in Well Details. See explanation for definition of symbols.

# LOG OF EXPLORATORY BORING

PROJECT NAME Remedial Investigation
LOCATION Riverbend Landfill; McMinnville, Oregon
DRILLED BY GeoTech Explorations
DRILL METHOD Hollow Stem Auger
LOGGED BY Craig D. Fanshier

BORING NO. MW-4B
PAGE 4 OF 8
GROUND ELEV. 137.80'
TOTAL DEPTH 71.80'
DATE COMPLETED 06/10/93

| RECOVERY PERCENT | POCKET PENETRO-METER (Tons/SF) | PENETRATION (Blows/Ft) | GROUND WATER LEVELS | DEPTH IN FEET | SAMPLES | WELL DETAILS | LITHOLOGIC COLUMN | LITHOLOGIC DESCRIPTION |
|---|---|---|---|---|---|---|---|---|
| | 2 | | | | | | | **16.5 to 31.5 feet: SILTY CLAY (CL), continued.** |
| | 2.5 | | | | | | | |
| | 3 | | | | | | | |
| | | | | | | | | **31.5 to 37.5 feet: CLAY (CH), 50% dark yellowish brown (10YR 4/4) and 50% olive dark olive gray (5Y 3/2); high plasticity fines; very stiff to hard; damp.** |
| | 3 | | | | | | | |
| | 3.5 | | | | | | | |
| | | | | | | | | @ 33.5 to 37.5 feet: olive brown (2.5Y 4/4) to light olive brown (2.5Y 5/4). |
| | 3 | | | | | | | |
| 100 | 3.5 | | | 35 | | | | |
| | 4 | | | | | | | |
| | 3 | | | | | | | |
| | 2.5 | | | | | | | **37.5 to 41.0 feet: SILTY CLAY (CL), olive brown (2.5Y 4/4), 97% medium plasticity fines; 3-5% fine sand; very stiff; moist.** |
| | 2.5 | | | | | | | |
| 100 | | 36 | | 40 | | | | |

## REMARKS

Drilled w/10" OD (6.5" ID) HSA. Samples continuously collected w/5'-long, 3" ID split barrel and 1.5'-long, 3" OD split spoon fitted w/rings. Bedrock was cored w/NX (3.5" O.D.) diamond core. A 2" PVC monitoring well was constructed in the borehole. Well construction information presented in Well Details. See explanation for definition of symbols.

# LOG OF EXPLORATORY BORING

PROJECT NAME **Remedial Investigation**
LOCATION **Riverbend Landfill; McMinnville, Oregon**
DRILLED BY **GeoTech Explorations**
DRILL METHOD **Hollow Stem Auger**
LOGGED BY **Craig D. Fanshier**

BORING NO. **MW-4B**
PAGE **5 OF 8**
GROUND ELEV. **137.80'**
TOTAL DEPTH **71.80'**
DATE COMPLETED **06/10/93**

| RECOVERY PERCENT | POCKET PENETRO-METER (Tons/SF) | PENETRATION (Blows/Ft) | GROUND WATER LEVELS | DEPTH IN FEET | SAMPLES | WELL DETAILS | LITHOLOGIC COLUMN | LITHOLOGIC DESCRIPTION |
|---|---|---|---|---|---|---|---|---|
| | | | | | | | | **37.5 to 41.0 feet: SILTY CLAY (CL)**, continued. |
| 100 | 0.25 | | | | | | | **41.0 to 42.5 feet: CLAYEY SAND (SC)**, yellowish brown (10YR 5/6); 20% medium plasticity fines; 77% fine sand, 3% gravels, 3/8 to 2/3-inch, rounded, matrix supported; wet. |
| | 1 | | | | | | | |
| | 2 | | | | | | | **42.5 to 50.0 feet: SILTY SAND (SM)**, dark grayish brown (2.5Y 4/2), 20% gray mottling, some rust red staining; 15% low plasticity fines; 80% fine to medium sand, moderately well sorted, subangular to subrounded; 5% 1/4-inch gravels, rounded; no bedding; wet. |
| | 2 | | | | | | | |
| 100 | 0.75 | | | | | | | |
| | | | | 45 | | | | |
| | 1.5 | | | | | | | |
| | | | | | | | | @ 45.8 feet: color changes to all gray. 15-20% low plasticity fines; 80-85% fine to medium sand, moderately sorted; some 1-inch lenses of medium sand with no fines; wet. |
| | 1 | | | | | | | |
| | 0.5 | | | | | | | @ 47.0 feet: several small brown wood fragments. |
| | | | | | | | | |
| | | | | | | | | |
| | | | | | | | | |
| | 0.5 | | | | | | | |
| 100 | | | | | | | | |
| | | | | 50 | | | | |

## REMARKS

Drilled w/10" OD (6.5" ID) HSA. Samples continuously collected w/5'-long, 3" ID split barrel and 1.5'-long, 3" OD split spoon fitted w/rings. Bedrock was cored w/NX (3.5" O.D.) diamond core. A 2" PVC monitoring well was constructed in the borehole. Well construction information presented in Well Details. See explanation for definition of symbols.

# LOG OF EXPLORATORY BORING

PROJECT NAME Remedial Investigation
LOCATION Riverbend Landfill; McMinnville, Oregon
DRILLED BY GeoTech Explorations
DRILL METHOD Hollow Stem Auger
LOGGED BY Craig D. Fanshier

BORING NO. MW-4B
PAGE 6 OF 8
GROUND ELEV. 137.80'
TOTAL DEPTH 71.80'
DATE COMPLETED 06/10/93

| RECOVERY PERCENT | POCKET PENETRO-METER (Tons/SF) | PENETRATION (Blows/Ft) | GROUND WATER LEVELS | DEPTH IN FEET | SAMPLES | WELL DETAILS | LITHOLOGIC COLUMN | LITHOLOGIC DESCRIPTION |
|---|---|---|---|---|---|---|---|---|
| 80 | | | | | | | | **50.0 to 53.0 feet: SANDY GRAVEL (GM),** dark olive gray (2.5Y 3/2); 5% low to medium plasticity fines; 20% fine to medium sand; 75-80% gravels, rounded, 3/8 to 2-inch; appears dense, well compacted, 50% are fine grained basalts; wet. @ 51.5 feet: dark yellowish brown (10YR 3/4); gravels in point contact in a sandy clay matrix, appears well compacted; wet. |
| 100 | | | | | | | | **53.0 to 54.5 feet: CLAYEY GRAVEL (GC),** gray; 25% medium plasticity fines; 15% sand, fine to medium; 60% gravels, 3/8 to 2-inch, gravels in point contact; some yellowish palagonitic weathering product; appears dense, moist to wet. |
| 100 | | | | 55 | | | | **54.5 to 61.5 feet: SANDY GRAVEL (GP),** dark yellowish brown (10YR 3/4), some iron oxide staining; 10% low plasticity fines; 30% fine to medium sand, subrounded, low sphericity, lithic marine sediment fragments; 60% 3/8 to 3/4-inch gravels, mostly 1/2-inch, approximately 50% in point contact, some gravels are elongated and oriented horizontally; several 1-inch sand lenses; appears dense, crumbles when removed from core; wet. |
| 100 | | | | 60 | | | | |

**REMARKS**

Drilled w/10" OD (6.5" ID) HSA. Samples continuously collected w/5'-long, 3" ID split barrel and 1.5'-long, 3" OD split spoon fitted w/rings. Bedrock was cored w/NX (3.5" O.D.) diamond core. A 2" PVC monitoring well was constructed in th borehole. Well construction information presented in Well Details. See explanation for definition of symbols.

# LOG OF EXPLORATORY BORING

PROJECT NAME **Remedial Investigation**
LOCATION **Riverbend Landfill; McMinnville, Oregon**
DRILLED BY **GeoTech Explorations**
DRILL METHOD **Hollow Stem Auger**
LOGGED BY **Craig D. Fanshier**

BORING NO. **MW-4B**
PAGE **7 OF 8**
GROUND ELEV. **137.80'**
TOTAL DEPTH **71.80'**
DATE COMPLETED **06/10/93**

| RECOVERY PERCENT | POCKET PENETRO-METER (Tons/SF) | PENETRA-TION (Blows/Ft) | GROUND WATER LEVELS | DEPTH IN FEET | SAMPLES | WELL DETAILS | LITHOLOGIC COLUMN | LITHOLOGIC DESCRIPTION |
|---|---|---|---|---|---|---|---|---|
| | | | | | | | | **54.5 to 61.5 feet: SANDY GRAVEL (GP),** continued. |
| | | | | | | | | **61.5 to 61.8 feet: SILTY (ML), brown; low** plasticity fines, wet. |
| 89 | | | | | | | | **61.8 to 71.8 feet: BASALT, olive black (5Y 2/2)** [GSA rock color chart], massive, fine to medium grained; calcite and zeolite filled vesicles, and fractures; minor dissiminated pyrite. RQD = 53% (NESTUCCA FORMATION). |
| | | | | 65 | | | | |
| | | | | 70 | | | | |

## REMARKS

Drilled w/10" OD (6.5" ID) HSA. Samples continuously collected w/5'-long, 3" ID split barrel and 1.5'-long, 3" OD split spoon fitted w/rings. Bedrock was cored w/NX (3.5" O.D.) diamond core. A 2" PVC monitoring well was constructed in the borehole. Well construction information presented in Well Details. See explanation for definition of symbols.

# LOG OF EXPLORATORY BORING

PROJECT NAME Remedial Investigation
LOCATION Riverbend Landfill; McMinnville, Oregon
DRILLED BY GeoTech Explorations
DRILL METHOD Hollow Stem Auger
LOGGED BY Craig D. Fanshier

BORING NO. MW-4B
PAGE 8 OF 8
GROUND ELEV. 137.80'
TOTAL DEPTH 71.80'
DATE COMPLETED 06/10/93

| RECOVERY PERCENT | POCKET PENETRO-METER (Tons/SF) | PENETRATION (Blows/Ft) | GROUND WATER LEVELS | DEPTH IN FEET | SAMPLES | WELL DETAILS | LITHOLOGIC COLUMN | LITHOLOGIC DESCRIPTION |
|---|---|---|---|---|---|---|---|---|
| | | | | | | | | 61.8 to 71.8 feet: BASALT, continued. |
| | | | | | | | | BORING TERMINATED AT 71.8 FEET. |
| | | | | 75 | | | | |
| | | | | 80 | | | | |

## REMARKS

Drilled w/10" OD (6.5" ID) HSA. Samples continuously collected w/5'-long, 3" ID split barrel and 1.5'-long, 3" OD split spoon fitted w/rings. Bedrock was cored w/NX (3.5" O.D.) diamond core. A 2" PVC monitoring well was constructed in th borehole. Well construction information presented in Well Details. See explanation for definition of symbols.

# WELL DETAILS

EMCON ASSOCIATES

CLIENT Riverbend Landfill Company, Inc.
PROJECT NUMBER 0258-001.24
PROJECT NAME MW-5 Remedial Investigation
LOCATION McMinnville, Oregon
WELL PERMIT NO. 52009

BORING / WELL NO. MW-4B
TOP OF CASING ELEV. 141.81
GROUND SURFACE ELEV. 139.2
DATUM Feet Mean Sea Level
INSTALLATION DATE 6/11 to 6/14/93

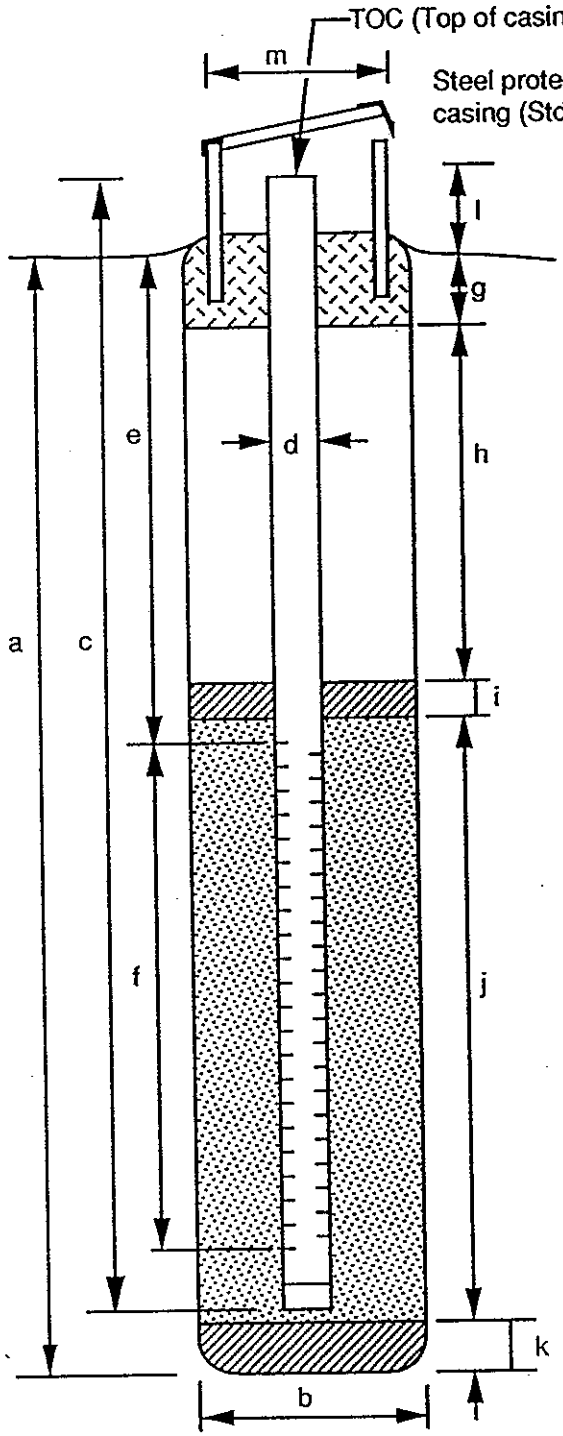


## EXPLORATORY BORING

a. Total depth 71.8 ft.
b. Diameter 10.5 and 3.5 in.
Drilling method Hollow Stem Auger

## WELL CONSTRUCTION

c. Total casing length 74.6 ft.
Material Schedule 40 PVC
d. Diameter 2 in.
e. Depth to top perforations 52.3 ft.
f. Perforated length 9.5 ft.
Perforated interval from 52.3 to 61.3 ft.
Perforation type Machine Slotted
Perforation size 0.010 Inches
g. Surface seal 2.0 ft.
Material Concrete
h. Backfill 45.0 ft.
Material High Yield Bentonite Grout
i. Seal 2.0 ft.
Material Bentonite Chips
j. Gravel pack 14.0 ft.
Gravel pack interval from 49.0 to 63.0 ft.
Material 10-20 Gradation Sand
k. Bottom seal/fill 8.8 ft.
Material Bentonite Chips
l. Casing stickup 2.6 ft.
m. Protective casing diameter 6.5 in.

Prepared by: Craig Fanshier
Reviewed by: Craig R Fanshier Date: 10/1/93

Rev. 7/23/91
Ventura Mac 4

# LOG OF EXPLORATORY BORING

PROJECT NAME Remedial Investigation
LOCATION Riverbend Landfill; McMinnville, Oregon
DRILLED BY GeoTech Explorations
DRILL METHOD Hollow Stem Auger
LOGGED BY Craig D. Fanshier

BORING NO. MW-6A
PAGE 1 OF 2
GROUND ELEV. 126.20'
TOTAL DEPTH 22.50'
DATE COMPLETED 05/24/93

| RECOVERY PERCENT | POCKET PENETRO-METER (Tons/SF) | PENETRATION (Blows/Ft) | GROUND WATER LEVELS | DEPTH IN FEET | SAMPLES | WELL DETAILS | LITHOLOGIC COLUMN | LITHOLOGIC DESCRIPTION |
|---|---|---|---|---|---|---|---|---|
| 96 | 2<br>2<br>2<br>2<br>1.5 | | | 5 | | | | **0 to 15.0 feet: SILTY CLAY (CL)**, light to dark brown with 20-30% strong grayish mottling, some reddish brown mottling; medium plasticity fines, some silt; granular soil peds; no macropores; stiff; damp.<br>@ 1.5 to 4.5 feet: approximately 50% gray and 50% brown mottled soil.<br><br>@ 4.0 to 4.5 feet: crushed red bricks.<br>@ 4.5 to 6.0 feet: wet. |
| 100 | 1<br>2<br>2<br>1<br>1.5 | | | 10 | | | | @ 5.5 feet: color changes to dark yellowish brown (10YR 4/4) with 10% light gray mottling.<br><br>@ 7.5 feet: some 1/16-inch macropores.<br><br>@ 8.5 to 9.0 feet: approximately 20% gray mottling. |
| 90 | 2<br>1.5<br>1.5<br>1.5<br>1.5 | | ▽ 8/10/93 | 15 | | | | @ 13.0 feet: dark brown (10YR 3/3).<br><br>@ 14.0 to 15.0 feet: color change from the overlying brown to dark olive gray is sharp. |
| 87 | 2.5 | 27 | | | | | | **15.0 to 22.5 feet: CLAY (CL)**, dark olive gray (5Y 3/2 to a bluish gray (5B 5/1), slight purplish tint; medium to high plasticity fines; 5% 1/32- to 1/4-inch macropores; stiff; moist to wet, free water along soil ped surfaces. |
| 100 | 2.5<br>1.5<br>1.5<br>15<br>15 | | ▽ 5/24/93 | 20 | | | | @ 18.5 feet: no purplish tint; soil slightly firmer. |

## REMARKS

Drilled w/8" OD (4.25" ID) HSA. Samples continuously collected w/5'-long, 3" ID split barrel and 1.5'-long, 3" OD split spoon fitted w/rings. A 2" PVC monitoring well was constructed in the borehole. Well construction information presented in Well Details. See explanation for definition of symbols.

# LOG OF EXPLORATORY BORING

PROJECT NAME **Remedial Investigation**
LOCATION **Riverbend Landfill; McMinnville, Oregon**
DRILLED BY **GeoTech Explorations**
DRILL METHOD **Hollow Stem Auger**
LOGGED BY **Craig D. Fanshier**

BORING NO. **MW-6A**
PAGE **2 OF 2**
GROUND ELEV. **126.20'**
TOTAL DEPTH **22.50'**
DATE COMPLETED **05/24/93**

| RECOVERY PERCENT | POCKET PENETRO-METER (Tons/SF) | PENETRATION (Blows/Ft) | GROUND WATER LEVELS | DEPTH IN FEET | SAMPLES | WELL DETAILS | LITHOLOGIC COLUMN | LITHOLOGIC DESCRIPTION |
|---|---|---|---|---|---|---|---|---|
| | | | | | | | | **15.0 to 22.5 feet: CLAY (CL), continued.**<br>**@ 20.5 feet: color changes to olive gray, with very slight purplish tint; soil is crumbly.** |
| | | | | | | | | **BORING TERMINATED AT 22.5 FEET.** |

25
30
35
40

## REMARKS

Drilled w/8" OD (4.25" ID) HSA. Samples continuously collected w/5'-long, 3" ID split barrel and 1.5'-long, 3" OD split spoon fitted w/rings. A 2" PVC monitoring well was constructed in the borehole. Well construction information presented in Well Details. See explanation for definition of symbols.

EMCON NORTHWEST

# WELL DETAILS

CLIENT Riverbend Landfill Company, Inc.
PROJECT NUMBER 0258-001.24
PROJECT NAME Remedial Investigation
LOCATION McMinnville, Oregon
WELL PERMIT NO. 52005

BORING / WELL NO. MW-6A
TOP OF CASING ELEV. 128.95
GROUND SURFACE ELEV. 126.2
DATUM Feet-Mean Sea Level
INSTALLATION DATE 5/24/93

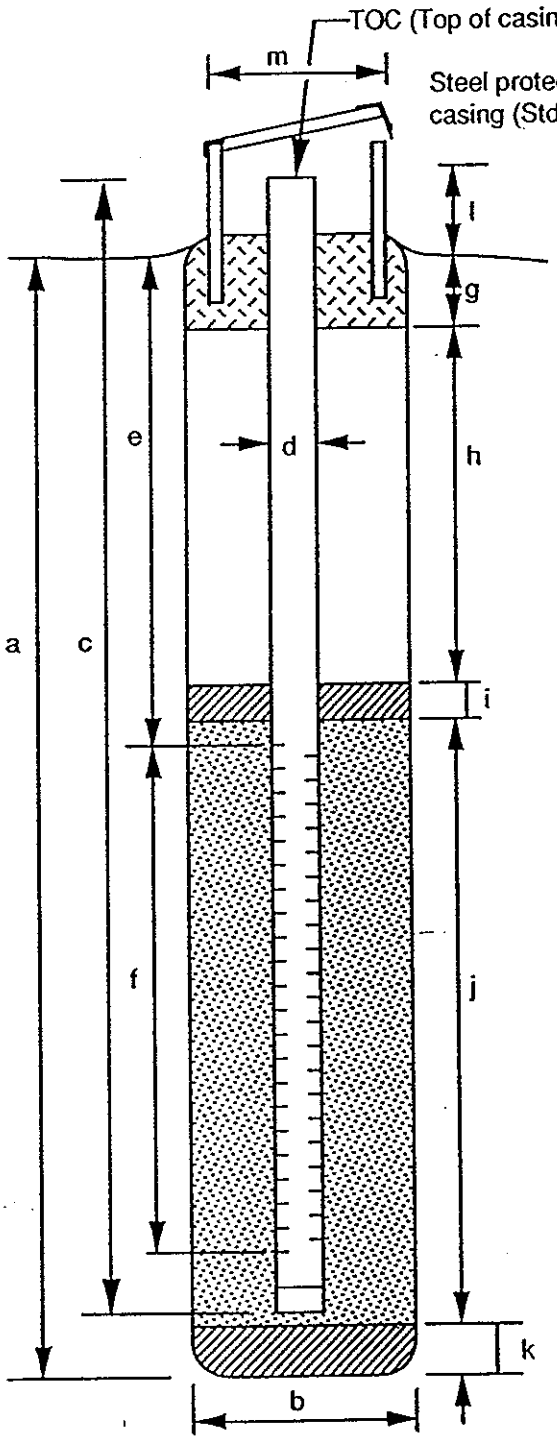


## EXPLORATORY BORING

a. Total depth 22.5 ft.
b. Diameter 8 in.
Drilling method Hollow Stem Auger

## WELL CONSTRUCTION

c. Total casing length 24.3 ft.
Material Schedule 40 PVC
d. Diameter 2 in.
e. Depth to top perforations 11.8 ft.
f. Perforated length 9.5 ft.
Perforated interval from 11.8 to 21.3 ft.
Perforation type Machine Slotted
Perforation size 0.010 Inches
g. Surface seal (0 to 2.5) 2.5 ft.
Material Concrete
h. Backfill NA ft.
Material NA
i. Seal (2.5 to 8.5) 6.0 ft.
Material Bentonite Chips
j. Gravel pack 14.0 ft.
Gravel pack interval from 8.5 to 22.5 ft.
Material 10-20 Gradation Sand
k. Bottom seal/fill NA ft.
Material NA
l. Casing stickup 2.8 ft.
m. Protective casing diameter 6.5 in.

Prepared by: Craig Fanshier
Reviewed by: Craig D. Fanshier Date: 10/1/93

Rev. 7/23/91
Ventura Mac 4

# LOG OF EXPLORATORY BORING

PROJECT NAME Remedial Investigation
LOCATION Riverbend Landfill; McMinnville, Oregon
DRILLED BY GeoTech Explorations
DRILL METHOD Hollow Stem Auger
LOGGED BY Craig D. Fanshier

BORING NO. MW-6B
PAGE 1 OF 6
GROUND ELEV. 137.80'
TOTAL DEPTH 56.00'
DATE COMPLETED 06/09/93

| RECOVERY PERCENT | POCKET PENETRO-METER (Tons/SF) | PENETRATION (Blows/Ft) | GROUND WATER LEVELS | DEPTH IN FEET | SAMPLES | WELL DETAILS | LITHOLOGIC COLUMN | LITHOLOGIC DESCRIPTION |
|---|---|---|---|---|---|---|---|---|
| 88 | | | | | | | | **0 to 17.5 feet: SILTY CLAY (CL)**, dark yellowish brown (10YR 4/4), with grayish brown and 1/8-inch diameter rust red mottling; low to medium plasticity fines; trace black organic material; some small (1/16-inch) macropores, vertical and horizontally oriented; small to medium granular peds; soft to firm, damp. |
| | | | | | | | | @ 0 to 6.0 feet: moderately well developed granular soil peds. |
| 88 | 2.5 | | | 5 | | | | |
| | | | | | | | | @ 5.5 feet: no mottling; slightly more silt than above. |
| | 2 | | | | | | | @ 6.0 to 9.0 feet: abundant macropores, approximately 5 per square inch, vertical and horizontally oriented, some large (1/4-inch) contain free water, 1/16 to 1/8-inch gray ring around some macropores which contain free water; poorly developed granular soil peds; stiff to very stiff; moist, moisture along soil peds. |
| | 2 | | | | | | | |
| | 2.5 | | | | | | | |
| 100 | 2.5 | | | 10 | | | | |

## REMARKS

Drilled w/8" OD (4.25" ID) HSA. Samples continuously collected w/5'-long, 3" ID split barrel and 1.5'-long, 3" OD split spoon fitted w/rings. Bedrock was cored w/NX (3.5" OD) diamond core. A 2" PVC monitoring well was constructed in the borehole. Well construction information presented in Well Details. See explanation for definition of symbols.

# LOG OF EXPLORATORY BORING

PROJECT NAME Remedial Investigation
LOCATION Riverbend Landfill; McMinnville, Oregon
DRILLED BY GeoTech Explorations
DRILL METHOD Hollow Stem Auger
LOGGED BY Craig D. Fanshier

BORING NO. MW-6B
PAGE 2 OF 6
GROUND ELEV. 137.80'
TOTAL DEPTH 56.00'
DATE COMPLETED 06/09/93

| RECOVERY PERCENT | POCKET PENETRO-METER (Tons/SF) | PENETRATION (Blows/Ft) | GROUND WATER LEVELS | DEPTH IN FEET | SAMPLES | WELL DETAILS | LITHOLOGIC COLUMN | LITHOLOGIC DESCRIPTION |
|---|---|---|---|---|---|---|---|---|
| | | | | | | | | **0 to 17.5 feet: SILTY CLAY (CL), continued.** |
| | 2.5 | | | | | | | |
| | 3 | | | | | | | @ 12.0 to 13.0 feet: gradational color change to a dark greenish gray (5GY 4/1); looser vertical columnar soil peds, soil ped surfaces are glossy; damp, no moisture along ped surfaces, very stiff. |
| | 3 | | | | | | | |
| | 3 | | ▼ 8/10/93 | | | | | |
| 100 | 2.5 | | | | | | | @ 15.0 feet: slight purplish tint; loose granular to blocky peds. |
| | | | ▽ 6/9/93 | 15 | | | | |
| | | | | | | | | **17.5 to 28.0 feet: CLAYEY SILT (ML)**, dark olive gray (5Y 3/3), low to medium plasticity fines; stiff to very stiff; moist. |
| 96 | | | | 20 | | | | |

## REMARKS

Drilled w/8" OD (4.25" ID) HSA. Samples continuously collected w/5'-long, 3" ID split barrel and 1.5'-long, 3" OD split spoon fitted w/rings. Bedrock was cored w/NX (3.5" OD) diamond core. A 2" PVC monitoring well was constructed in the borehole. Well construction information presented in Well Details. See explanation for definition of symbols.

# LOG OF EXPLORATORY BORING

PROJECT NAME Remedial Investigation
LOCATION Riverbend Landfill; McMinnville, Oregon
DRILLED BY GeoTech Explorations
DRILL METHOD Hollow Stem Auger
LOGGED BY Craig D. Fanshier

BORING NO. MW-6B
PAGE 3 OF 6
GROUND ELEV. 137.80'
TOTAL DEPTH 56.00'
DATE COMPLETED 06/09/93

| RECOVERY PERCENT | POCKET PENETRO-METER (Tons/SF) | PENETRA-TION (Blows/Ft) | GROUND WATER LEVELS | DEPTH IN FEET | SAMPLES | WELL DETAILS | LITHOLOGIC COLUMN | LITHOLOGIC DESCRIPTION |
|---|---|---|---|---|---|---|---|---|
| | 2 | | | | | | | **0 to 17.5 feet: SILTY CLAY (CL), continued.** Note: the clay and silt content varies in this soil unit. The variations are subtle and appear to be gradational between a CLAYEY SILT (ML) and a SILTY CLAY (CL). @ 20.0 to 21.0 feet: slight purplish tint, looser, vertical columnar soil peds. |
| | 1 | | | | | | | |
| | 1 | | | | | | | |
| | 1.5 | | | | | | | |
| 100 | | | | 25 | | | | @ 27.5 feet: approximately 10-15% reddish brown mottling, 1/16 to 1/4-inch, spherical, randomly distributed. |
| | | | | | | | | **28.0 to 34.0 feet: SILTY CLAY (CL),** dark olive gray (5Y 3/3), some brown mottling; 85-100% medium plasticity fines; 0-15% fine sand, amount gradationally increases from approximately 0% at 32.0 feet to 15% at 34.0 feet; firm to stiff; moist. |
| 100 | 1 | | | 30 | | | | |

## REMARKS

Drilled w/8" OD (4.25" ID) HSA. Samples continuously collected w/5'-long, 3" ID split barrel and 1.5'-long, 3" OD split spoon fitted w/rings. Bedrock was cored w/NX (3.5" OD) diamond core. A 2" PVC monitoring well was constructed in the borehole. Well construction information presented in Well Details. See explanation for definition of symbols.

# LOG OF EXPLORATORY BORING

PROJECT NAME Remedial Investigation
LOCATION Riverbend Landfill; McMinnville, Oregon
DRILLED BY GeoTech Explorations
DRILL METHOD Hollow Stem Auger
LOGGED BY Craig D. Fanshier

BORING NO. MW-6B
PAGE 4 OF 6
GROUND ELEV. 137.80'
TOTAL DEPTH 56.00'
DATE COMPLETED 06/09/93

| RECOVERY PERCENT | POCKET PENETRO-METER (Tons/SF) | PENETRA-TION (Blows/Ft) | GROUND WATER LEVELS | DEPTH IN FEET | SAMPLES | WELL DETAILS | LITHOLOGIC COLUMN | LITHOLOGIC DESCRIPTION |
|---|---|---|---|---|---|---|---|---|
| | | | | | | | | **28.0 to 34.0 feet: SILTY CLAY (CL)**, continued. |
| | | | | | | | | @ 32.0 to 34.0 feet: approximately 10% brown mottling. |
| 70 | | | | 35 | | | | **34.0 to 36.0 feet: SILTY SAND (SM)**, very dark gray (5Y 3/10; 15% nonplastic to low plasticity fines; 80% fine to medium sand (F:M=9:1) subangular; 1-3% gravels, 1/16 to 1/4-inch, rounded, quartz, marine sediment fragments; trace small wood fragments; wet. |
| | | | | | | | | **36.0 to 42.5 feet: SANDY GRAVEL (GM)**, brown, some iron oxide staining; 10-15% nonplastic to low plasticity fines; 20-25% fine to medium sand, arkosic; 60-70% gravels, fine to coarse, subrounded to rounded, medium sphericity, no orientation; appears loose, wet. |
| 70 | | | | 40 | | | | |

## REMARKS

Drilled w/8" OD (4.25" ID) HSA. Samples continuously collected w/5'-long, 3" ID split barrel and 1.5'-long, 3" OD split spoon fitted w/rings. Bedrock was cored w/NX (3.5" OD) diamond core. A 2" PVC monitoring well was constructed in the borehole. Well construction information presented in Well Details. See explanation for definition of symbols.

# LOG OF EXPLORATORY BORING

PROJECT NAME Remedial Investigation
LOCATION Riverbend Landfill; McMinnville, Oregon
DRILLED BY GeoTech Explorations
DRILL METHOD Hollow Stem Auger
LOGGED BY Craig D. Fanshier

BORING NO. MW-6B
PAGE 5 OF 6
GROUND ELEV. 137.80'
TOTAL DEPTH 56.00'
DATE COMPLETED 06/09/93

| RECOVERY PERCENT | POCKET PENETRO-METER (Tons/SF) | PENETRA-TION (Blows/Ft) | GROUND WATER LEVELS | DEPTH IN FEET | SAMPLES | WELL DETAILS | LITHOLOGIC COLUMN | LITHOLOGIC DESCRIPTION |
|---|---|---|---|---|---|---|---|---|
| | | | | | | | | **36.0 to 42.5 feet: SANDY GRAVEL (GM),** continued. |
| | | | | | | | | @ 42.5 feet: 3-inch basalt cobble. |
| | | | | | | | | **42.5 to 45.5 feet: GRAVELLY SAND (SW),** dark greenish gray (5G 4/1); 75-85% fine to medium sand; 15-25% gravels, 3/8 to 1/2-inch, subrounded to subangular; the gravels are matrix supported; appear medium dense; wet. |
| | | | | | | | | @ 44.0 feet: damp. |
| 75 | | | | 45 | | | | **45.5 to 56.0 feet: BASALT,** greenish gray, alphanitic, very small vesicles, calcite veining, trace dessiminated pyrite. 100% RQD. (FLOW FOOT BRECIA NESTUCCA FORMATION). |
| 100 | | | | | | | | |
| | | | | 50 | | | | |

## REMARKS

Drilled w/8" OD (4.25" ID) HSA. Samples continuously collected w/5'-long, 3" ID split barrel and 1.5'-long, 3" OD split spoon fitted w/rings. Bedrock was cored w/NX (3.5" OD) diamond core. A 2" PVC monitoring well was constructed in the borehole. Well construction information presented in Well Details. See explanation for definition of symbols.

# LOG OF EXPLORATORY BORING

PROJECT NAME **Remedial Investigation**
LOCATION **Riverbend Landfill; McMinnville, Oregon**
DRILLED BY **GeoTech Explorations**
DRILL METHOD **Hollow Stem Auger**
LOGGED BY **Craig D. Fanshier**

BORING NO. **MW-6B**
PAGE **6 OF 6**
GROUND ELEV. **137.80'**
TOTAL DEPTH **56.00'**
DATE COMPLETED **06/09/93**

| RECOVERY PERCENT | POCKET PENETRO-METER (Tons/SF) | PENETRA-TION (Blows/Ft) | GROUND WATER LEVELS | DEPTH IN FEET | SAMPLES | WELL DETAILS | LITHOLOGIC COLUMN | LITHOLOGIC DESCRIPTION |
|---|---|---|---|---|---|---|---|---|
| | | | | 55 | | | | 45.5 to 56.0 feet: BASALT, continued. |
| | | | | | | | | BORING TERMINATED AT 56.0 FEET. |
| | | | | 60 | | | | |

## REMARKS

Drilled w/8" OD (4.25" ID) HSA. Samples continuously collected w/5'-long, 3" ID split barrel and 1.5'-long, 3" OD split spoon fitted w/rings. Bedrock was cored w/NX (3.5" OD) diamond core. A 2" PVC monitoring well was constructed in the borehole. Well construction information presented in Well Details. See explanation for definition of symbols.

# WELL DETAILS

EMCON ASSOCIATES

CLIENT Riverbend Landfill Company, Inc.
PROJECT NUMBER 0258-001.24
PROJECT NAME MW-5 Remedial Investigation
LOCATION McMinnville, Oregon
WELL PERMIT NO. 52008

BORING / WELL NO. MW-6B
TOP OF CASING ELEV. 128.59
GROUND SURFACE ELEV. 125.8
DATUM Feet Mean Sea Level
INSTALLATION DATE 6/10/93

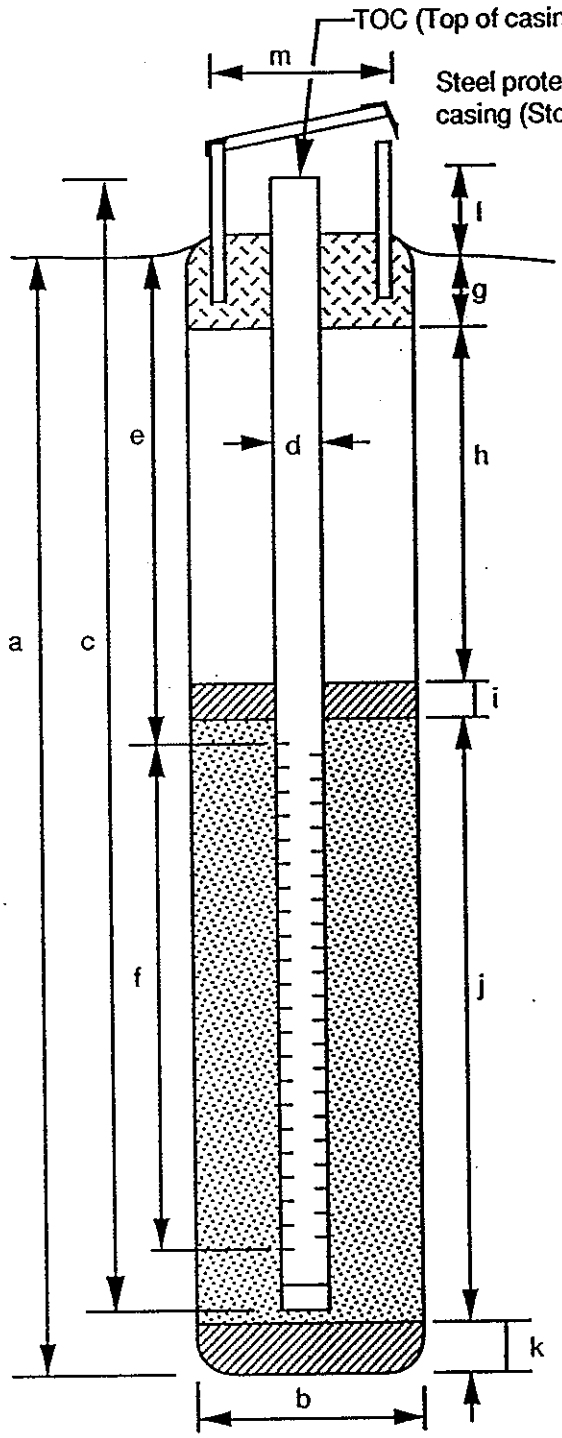


## EXPLORATORY BORING

a. Total depth 56.0 ft.
b. Diameter 8 and 3.5 in.
Drilling method Hollow Stem Auger

## WELL CONSTRUCTION

c. Total casing length 48.8 ft.
Material Schedule 40 PVC
d. Diameter 2 in.
e. Depth to top perforations 36.3 ft.
f. Perforated length 9.5 ft.
Perforated interval from 36.3 to 45.3 ft.
Perforation type Machine Slotted
Perforation size 0.010 Inches
g. Surface seal 2.5 ft.
Material Concrete
h. Backfill NA ft.
Material NA
i. Seal 31.7 ft.
Material Bentonite Chips
j. Gravel pack 12.8 ft.
Gravel pack interval from 34.2 to 47.0 ft.
Material 10-20 Gradation Sand
k. Bottom seal/fill 9.0 ft.
Material Bentonite Chips
l. Casing stickup 2.8 ft.
m. Protective casing diameter 6.5 in.

Prepared by: Craig Fanshier
Reviewed by: Craig D Fanshier Date: 10/1/93

Rev. 7/23/91
Ventura Mac 4

# LOG OF EXPLORATORY BORING

| | | | |
|---|---|---|---|
| PROJECT NAME | RIVERBEND LANDFILL | BORING NO. | P-01 |
| LOCATION | McMinnville, Oregon | PAGE | 1 OF 2 |
| DRILLED BY | GeoTech Explorations | REFERENCE ELEV. | 123.02' |
| DRILL METHOD | Hollow Stem Auger | TOTAL DEPTH | 19.00' |
| LOGGED BY | Craig D. Fanshier | DATE COMPLETED | 12/21/92 |

| SAMPLE NUMBER | RECOVERY PERCENT | SAMPLE TYPE | GROUND WATER LEVELS | DEPTH IN FT. | SAMPLES | WELL DETAILS | LITHOLOGIC COLUMN | LITHOLOGIC DESCRIPTION |
|---|---|---|---|---|---|---|---|---|
| S-1 | 60 | CS | | | | | | 0-0.8 feet: CLAYEY SILT (ML), dark brown, 80-85% silt, 15% clay, 5% roots (2"-6" long), soft, moist, low plasticity, <2% small gray mottles. (ALLUVIUM) |
| S-2 | 76 | CS | | | | | | 0.8-3.2 feet: CLAYEY SILT (ML), gray, 85-95% silt, 5-15% clay, firm, low plasticity, some roots. |
| | | | | | | | | 3.2-8.3 feet: CLAYEY SILT (ML), brown, 80-90% silt, 10% clay, approx. 5% gray mottles (1/4" dia.), firm to soft, damp, low plasticity, 10-15% rust red mottles, trace water in macro pores, fewer roots with depth. |
| | | | | 5 | | | | |
| | | | 5.85' | | | | | |
| S-3 | 56 | CS | | | | | | |
| | | | | | | | | @ 8 feet: Hard tight drilling. |
| | | | | | | | | 8.3-19 feet: CLAY (CL), light to dark gray, 80-90% high plasticity clay, firm to stiff, damp (texture and color is homogeneous from 12-19'), occasional black organic lenses and light rust brown mottles. |
| | | | | 10 | | | | |
| S-4 | 100 | CS | | | | | | |
| | | | | 15 | | | | |
| | | | 16.8' | | | | | |
| S-5 | 100 | CS | | | | | | |
| | | | | 20 | | | | Total depth drilled 19 feet bgs.<br>Total depth sampled 19 feet bgs.<br>DRILLING METHOD:<br>A CME 55 drill rig was used to advance the borehole using a 7.5-inch O.D. (4 1/4-inch I.D.) Hollow stem auger. A 5-foot long core barrel was used to continuously sample the boring.<br>PIEZOMETER CONSTRUCTION DETAILS:<br>+2.9-8 feet: 2-inch dia. schedule 40 PVC blank casing. |
| | | | | 25 | | | | |

REMARKS

SS=Split spoon sample. CS=Continuous sample.

# LOG OF EXPLORATORY BORING

| | | | |
|---|---|---|---|
| PROJECT NAME | RIVERBEND LANDFILL | BORING NO. | P-01 |
| LOCATION | McMinnville, Oregon | PAGE | 2 OF 2 |
| DRILLED BY | GeoTech Explorations | REFERENCE ELEV. | 123.02' |
| DRILL METHOD | Hollow Stem Auger | TOTAL DEPTH | 19.00' |
| LOGGED BY | Craig D. Fanshier | DATE COMPLETED | 12/21/92 |

| SAMPLE NUMBER | RECOVERY PERCENT | SAMPLE TYPE | GROUND WATER LEVELS | DEPTH IN FT. | SAMPLES | WELL DETAILS | LITHOLOGIC COLUMN | LITHOLOGIC DESCRIPTION |
|---|---|---|---|---|---|---|---|---|
| | | | | 30 | | | | 8-18 feet: 2-inch dia. schedule 40 PVC screen with 0.010-inch machined slots.<br>18-18.4 feet: 2-inch dia. schedule 40 PVC end cap.<br>+0.5-2 feet: Concrete.<br>2-5.9 feet: 3/8-inch hydrated bentonite chips.<br>5.9-19 feet: 10x20 gradation Colorado silica sand pack.<br>PVC casing and screen couplings were flush threaded with "O"-rings.<br>The surface completion consisted of a protective cover constructed of a 6-inch dia. by 5-foot long steel pipe positioned over the piezometer, through the concrete and set into the bentonite seal. An expansion well cap was used to cap the piezometer. A steel cover was locked on the protective casing. Three 2-inch dia. by 5-foot long steel pipes anchored 2 feet into the ground with concrete were installed in a triangle pattern around the piezometer.<br>Groundwater sample P01-W-17 collected through the augers at a depth of 19 feet. |
| | | | | 35 | | | | |
| | | | | 40 | | | | |
| | | | | 45 | | | | |
| | | | | 50 | | | | |

**REMARKS**

SS=Split spoon sample. CS=Continuous sample.

# WELL DETAILS

EMCON

PROJECT NUMBER 0258-001.19
PROJECT NAME Phase 2 Preliminary Assessment
LOCATION Riverbend Landfill
WELL PERMIT NO. NA

BORING / WELL NO. P - 01
TOP OF CASING ELEV. 125.92
GROUND SURFACE ELEV. 123.12
DATUM Mean Sea Level
INSTALLATION DATE 12-21-92

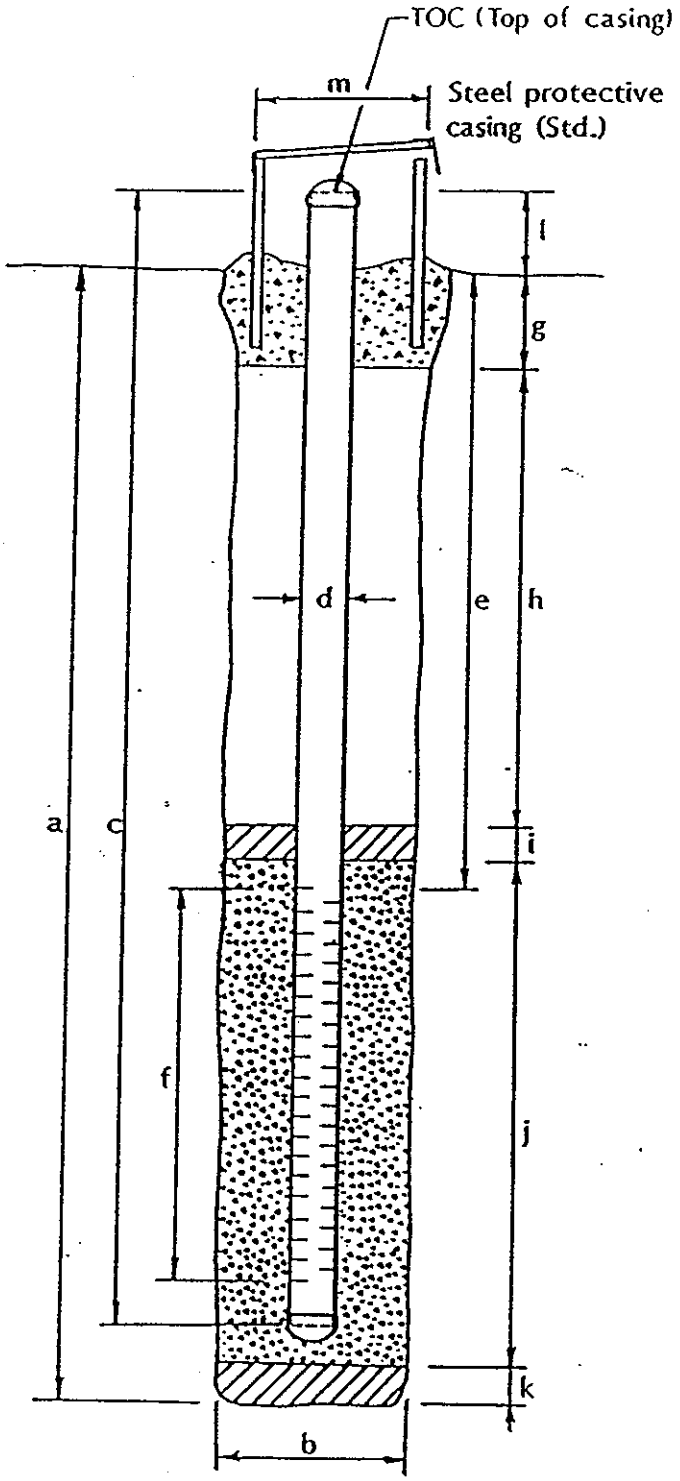


## EXPLORATORY BORING

a. Total depth 19 ft.
b. Diameter 7.5 in.
Drilling method Hollow Stem Auger

## WELL CONSTRUCTION

c. Total casing length 20.9 ft.
Material Schedule 40 PVC
d. Diameter 2 in.
e. Depth to top perforations 8 ft.
f. Perforated length 10 ft.
Perforated interval from 8 to 18 ft.
Perforation type Machine Slotted
Perforation size 0.010-Inch
g. Surface seal 2 ft.
Seal material Concrete
h. Backfill 0 ft.
Backfill material NA
i. Seal 3.9 ft.
Seal material 3/8-Inch Bentonite Chips
j. Gravel pack 13.1 ft.
Pack material 10 x 20 Gradation Sand
k. Bottom seal 0 ft.
Seal material NA
l. Casing stickup 2.8 ft.
m. Protective casing diameter 6 in.

NA = Not Applicable

Prepared by: _____

Reviewed by: _____ Date: _____

Form F-11 Rev. 12/90

# LOG OF EXPLORATORY BORING

| | | | |
|---|---|---|---|
| PROJECT NAME | RIVERBEND LANDFILL | BORING NO. | P-02 |
| LOCATION | McMinnville, Oregon | PAGE | 1 OF 2 |
| DRILLED BY | GeoTech Explorations | REFERENCE ELEV. | 120.86' |
| DRILL METHOD | Hollow Stem Augor | TOTAL DEPTH | 18.00' |
| LOGGED BY | Craig D. Fanshier | DATE COMPLETED | 12/22/92 |

| SAMPLE NUMBER | RECOVERY PERCENT | SAMPLE TYPE | GROUND WATER LEVELS | DEPTH IN FT. | SAMPLES | WELL DETAILS | LITHOLOGIC COLUMN | LITHOLOGIC DESCRIPTION |
|---|---|---|---|---|---|---|---|---|
| S-1 | 87 | CS | | | | | | 0-5 feet: CLAYEY SILT (ML), dark to medium reddish brown, 80-90% silt, 10-20% clay, firm (softer at top), damp to moist, abundant roots at top of interval, minor roots to 2 feet. (ALLUVIUM) |
| | | | | | | | | @ 2.7-3 feet: Trace gray mottling |
| S-2 | 40 | CS | ▼ 3.55' | | | | | |
| | | | | 5 | | | | 5-6.5 feet: CLAYEY SILT (ML), reddish brown with 50% light gray mottling, 20% clay, soft to firm, moist to wet, medium plasticity, several horizontal black streaks across core, some horizontal orientation to the mottling. |
| | | | ▽ 6.05' | | | | | |
| S-3 | 86 | CS | | | | | | 6.5-9 feet: CLAY (CL), gray with 20-40% gray mottles, firm, moist, soft, wet at 9.5 feet. (ALLUVIUM) |
| | | | | | | | | 9-18 feet: CLAY (CL), gray with 10-30% rust red mottles, 80% clay, 20% silt, firm to soft, wet, high to medium plasticity, red and gray horizontally oriented mottles. |
| | | | | 10 | | | | |
| S-4 | 100 | CS | | | | | | @ 14-18 feet: Firm, some macro pores with water, approx. 15% rust red mottles. |
| | | | | 15 | | | | |
| | | | | | | | | Total depth drilled 18 feet bgs. |
| | | | | | | | | Total depth sampled 18 feet bgs. |
| | | | | | | | | DRILLING METHOD: |
| | | | | | | | | A CME 55 drill rig was used to advance the borehole using a 7.5-inch O.D. (4 1/4-inch I.D.) hollow stem auger. A 5-foot long core barrel was used to continuously sample the borehole. |
| | | | | | | | | PIEZOMETER CONSTRUCTION DETAILS: |
| | | | | | | | | +3-6.8 feet: 2-inch dia. schedule 40 PVC blank casing. |
| | | | | | | | | 6.8-16.8 feet: 2-inch dia. schedule 40 PVC screen with 0.010-inch machined slots. |
| | | | | 20 | | | | |
| | | | | 25 | | | | |

REMARKS

SS=Split spoon sample. CS=Continuous sample.

# LOG OF EXPLORATORY BORING

| | | | |
|---|---|---|---|
| PROJECT NAME | RIVERBEND LANDFILL | BORING NO. | P- 02 |
| LOCATION | McMinnville, Oregon | PAGE | 2 OF 2 |
| DRILLED BY | GeoTech Explorations | REFERENCE ELEV. | 120.86' |
| DRILL METHOD | Hollow Stem Auger | TOTAL DEPTH | 18.00' |
| LOGGED BY | Craig D. Fanshier | DATE COMPLETED | 12/22/92 |

| SAMPLE NUMBER | RECOVERY PERCENT | SAMPLE TYPE | GROUND WATER LEVELS | DEPTH IN FT. | SAMPLES | WELL DETAILS | LITHO-LOGIC COLUMN | LITHOLOGIC DESCRIPTION |
|---|---|---|---|---|---|---|---|---|
| | | | | 30 | | | | 16.8-17.2 feet: 2-inch dia. schedule 40 PVC end cap.<br>+0.5-1 feet: Concrete.<br>1-5 feet: 3/8-inch hydrated bentonite chips.<br>5-18 feet: 10x20 gradation Colorado silica sand pack.<br>PVC casing and screen couplings were flush threaded with "O"-rings.<br>The surface completion consisted of a protective cover constructed of a 6-inch dia. by 5-foot long steel pipe positioned over the piezometer, through the concrete and set into the bentonite seal. An expansion well cap was used to cap the piezometer. A steel cover was locked on the protective casing. Three 2-inch dia. by 5-foot long steel pipes anchored 2 feet into the ground with concrete were installed in a triangle pattern around the piezometer.<br>Groundwater sample P02-W-10 collected through the augers at a depth of 10.2 feet. |
| | | | | 35 | | | | |
| | | | | 40 | | | | |
| | | | | 45 | | | | |
| | | | | 50 | | | | |

REMARKS

SS=Split spoon sample. CS=Continuous sample.

# WELL DETAILS

EMCON

PROJECT NUMBER 0258-001.19
PROJECT NAME Phase 2 Preliminary Assessment
LOCATION Riverbend Landfill
WELL PERMIT NO. NA

BORING / WELL NO. P-02
TOP OF CASING ELEV. 123.86
GROUND SURFACE ELEV. 120.86
DATUM Mean Sea Level
INSTALLATION DATE 12-22-92

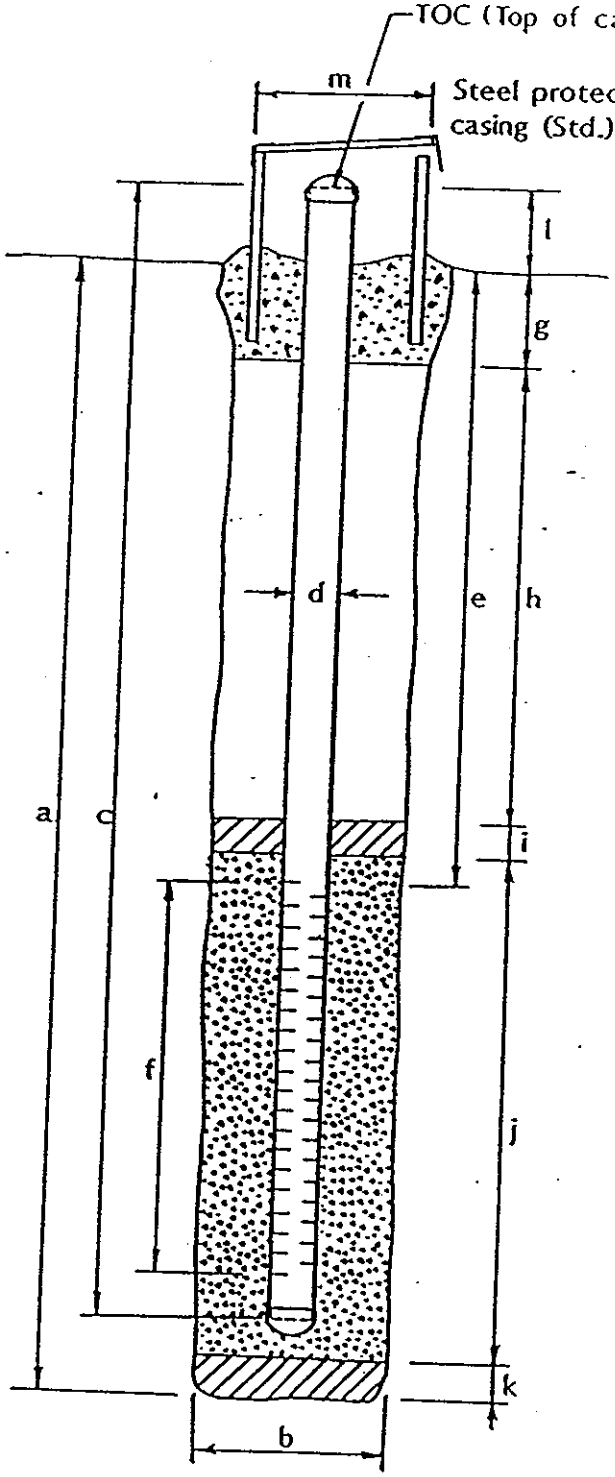


## EXPLORATORY BORING

a. Total depth 18.0 ft.
b. Diameter 7.5 in.
Drilling method Hollow Stem Auger

## WELL CONSTRUCTION

c. Total casing length 19.8 ft.
Material Schedule 40 PVC
d. Diameter 2 in.
e. Depth to top perforations 6.8 ft.
f. Perforated length 10 ft.
Perforated interval from 6.8 to 16.8 ft.
Perforation type Machine Slotted
Perforation size 0.010-Inch
g. Surface seal 1 ft.
Seal material Concrete
h. Backfill 0 ft.
Backfill material NA
i. Seal 4 ft.
Seal material 3/8-Inch Bentonite Chips
j. Gravel pack 13 ft.
Pack material 10 x 20 Gradation Sand
k. Bottom seal 0 ft.
Seal material NA
l. Casing stickup 3 ft.
m. Protective casing diameter 6 in.

NA = Not Applicable

Prepared by: _____

Reviewed by: _____ Date: _____

# LOG OF EXPLORATORY BORING

PROJECT NAME **Remedial Investigation**
LOCATION **Riverbend Landfill; McMinnville, Oregon**
DRILLED BY **GeoTech Explorations**
DRILL METHOD **Hollow Stem Auger**
LOGGED BY **Craig D. Fanshier**

BORING NO. P-03
PAGE 1 OF 1
GROUND ELEV. 121.10'
TOTAL DEPTH 21.00'
DATE COMPLETED 06/23/93

| RECOVERY PERCENT | POCKET PENETRO-METER (Tons/SF) | PENETRATION (Blows/Ft) | GROUND WATER LEVELS | DEPTH IN FEET | SAMPLES | WELL DETAILS | LITHOLOGIC COLUMN | LITHOLOGIC DESCRIPTION |
|---|---|---|---|---|---|---|---|---|

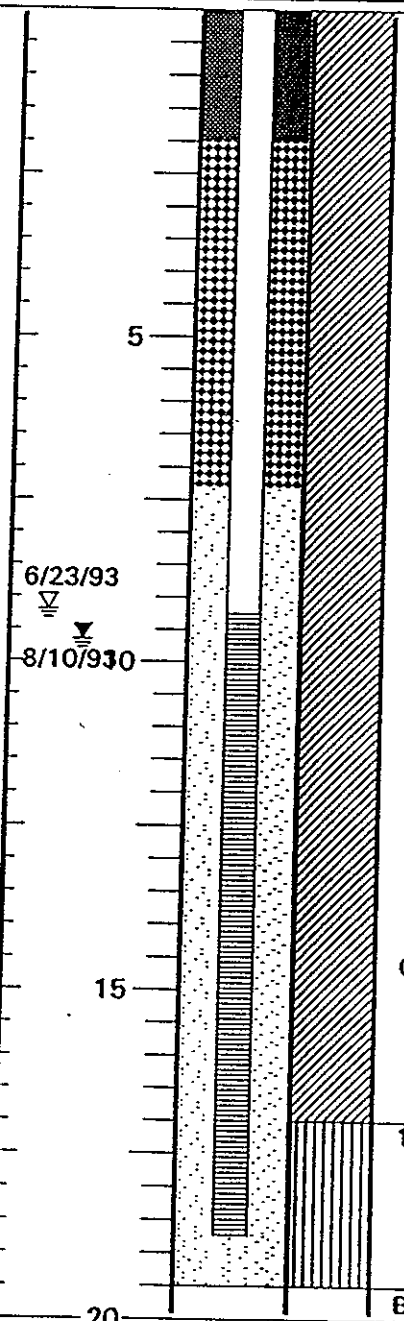


0 to 17.0 feet: **SILTY CLAY (CL)**, dark reddish brown (5YR 3/2), 50% gray mottling; medium plasticity fines; some roots and rootlets to 4.5 feet; soil is crumbly; stiff to very stiff; damp.

@ 4.5 to 17.0 feet: strong gray and red mottling; low to medium plasticity fines; very abundant 1/8-inch diameter macropores.

@ 7.5 feet: black organic streak; several 3/8 to 1/2-inch diameter macropores.

@ 9.5 feet: core is wet; macropores contain free water.

@ 14.5 to 17.0 feet: gradational contact with the underlying SILT (ML) unit.

17.0 to 19.5 feet: **CLAYEY SILT (ML)**, dark reddish brown (5YR 3/2); low plasticity fines; soft to firm; wet.

**BORING TERMINATED AT 19.5 FEET.**

## REMARKS

Drilled w/8" (4.25" ID) HSA. Samples continuously collected w/5'-long, 3" ID split barrel and 1.5'-long, 3" OD split spoon fitted w/rings. A 2" piezometer was constructed in the borehole. Well construction information presented in Well Details. See explanation for definition of symbols.

**EMCON NORTHWEST**

# WELL DETAILS

CLIENT Riverbend Landfill Company, Inc.
PROJECT NUMBER 0258-001.24
PROJECT NAME Remedial Investigation
LOCATION McMinnville, Oregon
WELL PERMIT NO. 52011

BORING / WELL NO. P-03
TOP OF CASING ELEV. 123.63
GROUND SURFACE ELEV. 121.1
DATUM Feet-Mean Sea Level
INSTALLATION DATE 6/23/93

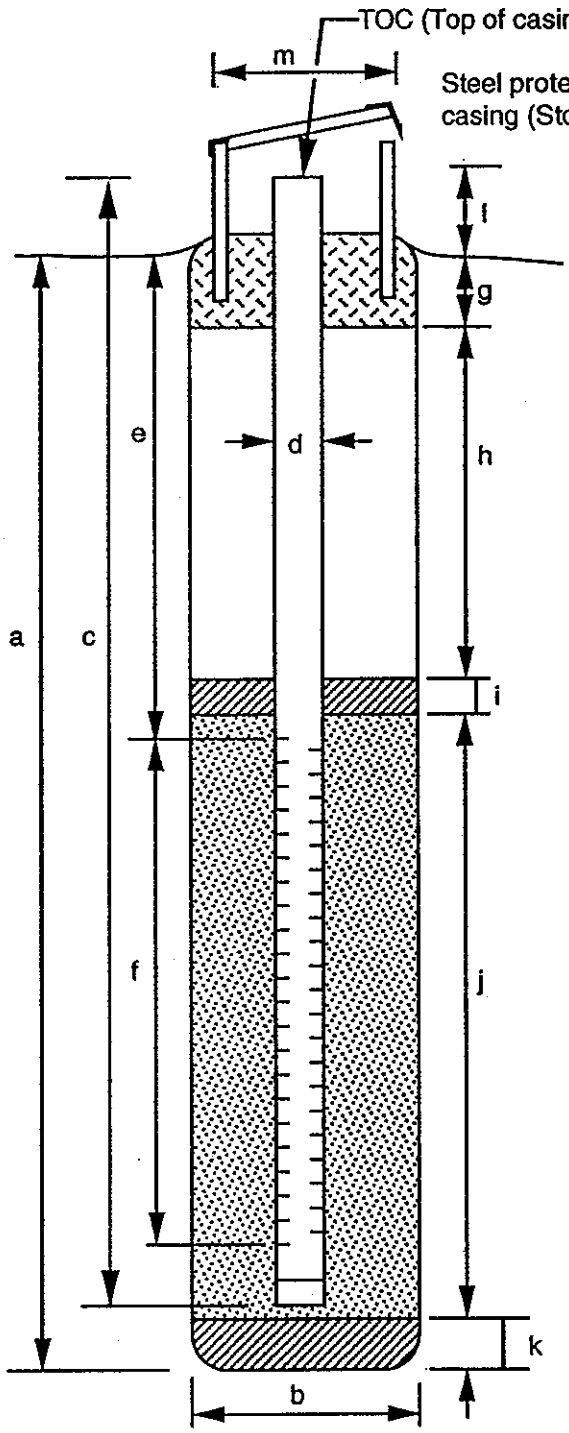


## EXPLORATORY BORING

a. Total depth 19.5 ft.
b. Diameter 8 in.
Drilling method Hollow Stem Auger

## WELL CONSTRUCTION

c. Total casing length 21.5 ft.
Material Schedule 40 PVC
d. Diameter 2 in.
e. Depth to top perforations 9.3 ft.
f. Perforated length 9.5 ft.
Perforated interval from 9.3 to 18.8 ft.
Perforation type Machine Slotted
Perforation size 0.010 Inches
g. Surface seal (0 to 2.0) 2.0 ft.
Material Concrete
h. Backfill NA ft.
Material NA
i. Seal (2.0 to 7.3) 5.3 ft.
Material Bentonite Chips
j. Gravel pack 12.2 ft.
Gravel pack interval from 7.3 to 19.5 ft.
Material 10-20 Gradation Sand
k. Bottom seal/fill NA ft.
Material NA
l. Casing stickup 2.5 ft.
m. Protective casing diameter 6.5 in.

Prepared by: Craig Fanshier

Ventura Mac 4 Rev. 7/23/91

# LOG OF EXPLORATORY BORING

| | | | |
|---|---|---|---|
| PROJECT NAME | **North Poplar Tree Farm** | BORING NO. | **P-05A** |
| LOCATION | **Riverbend Landfill, McMinnville, Oregon** | PAGE | **1 of 2** |
| DRILLED BY | **GeoTech Explorations, Inc.** | APPROX. GROUND ELEV. | **138.60** |
| DRILL METHOD | **Geoprobe** | TOTAL DEPTH | **20.0'** |
| LOGGED BY | **Craig D. Fanshier, R.G.** | DATE COMPLETED | **10/13/05** |

| SAMPLE NUMBER (SAMPLE METHOD) | RECOVERY (feet) | PID (in ppm) | GROUND WATER LEVEL | DEPTH IN FEET | SAMPLES | WELL DETAILS | LITHO-LOGIC COLUMN | LITHOLOGIC DESCRIPTION |
|---|---|---|---|---|---|---|---|---|
| | 4.2 | | | 5 | | | | **0 to 6.8 feet: CLAYEY SILT (ML)**; brown (10YR 4/3); 100 percent non to low plasticity fines; platy soil peds; trace macro pores; damp. |
| | 4.0 | | | | | | | |
| | 4.8 | | | 10 | | | | **6.8 to 17.3 feet: SILTY CLAY (CL)**; brown (10YR 4/3) with dark brown mottling (6.8 to 7.9 feet); 100 percent low plasticity fines; damp to moist.<br>@ 8.0 feet: mostly clay.<br>@ 10.0 feet: dark brown, soft, moist.<br>@ 11.0 feet: root traces.<br>@ 12.0 feet: evenly colored brown. |
| | 4.2 | | | 15 | | | | @ 15.0 feet: wet.<br>@ 15.8 to 16.2 feet: SILTY SAND (wet).<br>@ 16.8 to 17.2 feet: SILTY SAND to CLAYEY SILT (ML); (wet). |
| | | | | 20 | | | | **17.3 to 20.0 feet: SILTY CLAY (CL) to CLAYEY SILT (ML)**; dark greenish gray (5G 4/1); damp to moist.<br>Bottom of boring = 20.0 feet. |
| | | | | 25 | | | | See Page 2 for Well Completion Details. |

**REMARKS**

Geoprobe boring was advanced and soil samples were collected with a 5-foot-long, 2 1/6-inch outside-diameter soil macro-sampler. The borehole was widened to 3.5 inches by advancing a separate geoprobe casing. A 1-inch i.d. schedule 40 PVC piezometer was constructed in the boring using a prepacked 0.010-inch slot well screen and 20-40 sand. A 10-20 sand pack was added to the borehole annulus and topped with bentonite casing seal.

Shaw™ Environmental, Inc.

# LOG OF EXPLORATORY BORING

| | | | |
|---|---|---|---|
| PROJECT NAME | **North Poplar Tree Farm** | BORING NO. | **P-05A** |
| LOCATION | **Riverbend Landfill, McMinnville, Oregon** | PAGE | **2 of 2** |
| DRILLED BY | **GeoTech Explorations, Inc.** | APPROX. GROUND ELEV. | **138.60** |
| DRILL METHOD | **Geoprobe** | TOTAL DEPTH | **20.0'** |
| LOGGED BY | **Craig D. Fanshier, R.G.** | DATE COMPLETED | **10/13/05** |

| SAMPLE NUMBER (SAMPLE METHOD) | RECOVERY (feet) | PID (in ppm) | GROUND WATER LEVEL | DEPTH IN FEET | SAMPLES | WELL DETAILS | LITHO-LOGIC COLUMN | LITHOLOGIC DESCRIPTION |
|---|---|---|---|---|---|---|---|---|
| | | | | 30<br>35<br>40<br>45<br>50 | | | | **WELL COMPLETION DETAILS**<br>0 to 9.7 feet: 1-inch-diameter, Schedule 40 PVC piezometer.<br>9.7 to 19.5 feet: 1-inch-diameter, prepacked Schedule 40 PVC well screen with 0.010-inch machined slots and 1-inch-diameter threaded end cap.<br><br>0 to 0.5 foot: Concrete.<br>0.5 to 7.5 feet: Bentonite chips hydrated with potable water.<br>7.5 to 20.0 feet: 10-20 Colorado Silica Sand.<br><br>PVC Elevation: 140.74<br>Northing: 2875.1<br>Easting: 3612.4 |

**REMARKS**

Geoprobe boring was advanced and soil samples were collected with a 5-foot-long, 2 1/6-inch outside-diameter soil macro-sampler. The borehole was widened to 3.5 inches by advancing a separate geoprobe casing. A 1-inch i.d. schedule 40 PVC piezometer was constructed in the boring using a prepacked 0.010-inch slot well screen and 20-40 sand. A 10-20 sand pack was added to the borehole annulus and topped with bentonite casing seal.

Shaw™ Environmental, Inc.

# LOG OF EXPLORATORY BORING

| | | | |
|---|---|---|---|
| PROJECT NAME | **North Poplar Tree Farm** | BORING NO. | **P-06A** |
| LOCATION | **Riverbend Landfill, McMinnville, Oregon** | PAGE | **1 of 2** |
| DRILLED BY | **GeoTech Explorations, Inc.** | APPROX. GROUND ELEV. | **129.30** |
| DRILL METHOD | **Geoprobe** | TOTAL DEPTH | **20.0'** |
| LOGGED BY | **Craig D. Fanshier, R.G.** | DATE COMPLETED | **10/13/05** |

| SAMPLE NUMBER (SAMPLE METHOD) | RECOVERY (feet) | PID (in ppm) | LITHOLOGIC DESCRIPTION |
|---|---|---|---|
| | 2.7 | | **0 to 20 feet: CLAY (CL)**; very dark gray brown (10YR 3/2), 30 to 50 percent mottling; 100 percent medium plastic fines (70 percent clay, 30 percent silt); damp; with root traces, root remains. |
| | 5.0 | | @ 5.0 feet: CLAY (CL); very dark gray (10YR 3/1), 20 percent reddish mottles (2 to 5 mm); medium to high plasticity fines; damp to moist. |
| | | | @ 8.0 feet: trace (but not very many) small (<1/32") macro pores. |
| | 5.0 | | @ 10.0 to 15.0 feet: high plasticity, very stiff. |
| | | | @ 13.0 feet: some gray to greenish gray mottling. |
| | | | @ 14.3 feet: color changes to dark greenish gray (5G 4/1). |
| | 1.5 | | @ 15.0 feet: medium plasticity, ~20 to 30 percent silt; soft; damp to moist; probably wet (slow recharge). |
| | | | Bottom of boring = 20.0 feet. |
| | | | See Page 2 for Well Completion Details. |

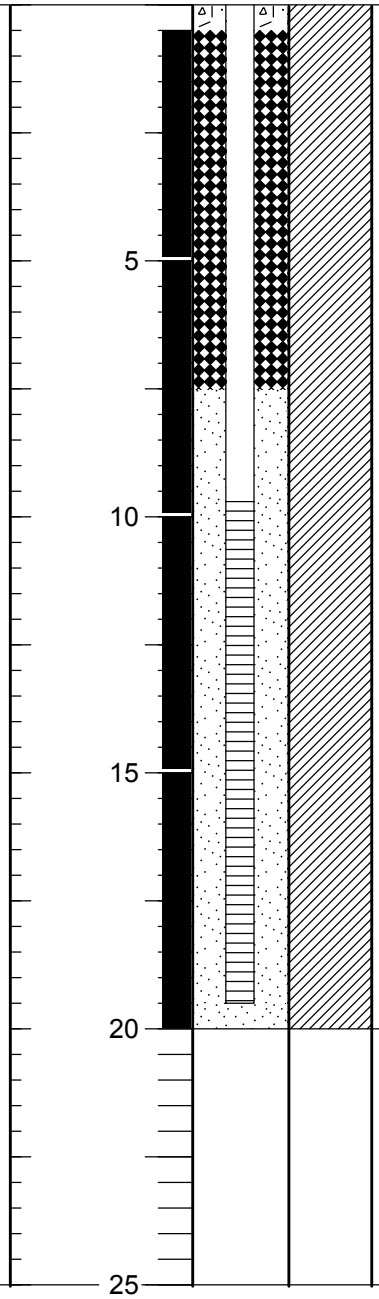


**REMARKS**

Geoprobe boring was advanced and soil samples were collected with a 5-foot-long, 2 1/6-inch outside-diameter soil macro-sampler. The borehole was widened to 3.5 inches by advancing a separate geoprobe casing. A 1-inch i.d. schedule 40 PVC piezometer was constructed in the boring using a prepacked 0.010-inch slot well screen and 20-40 sand. A 10-20 sand pack was added to the borehole annulus and topped with bentonite casing seal.

Shaw™ Environmental, Inc.

# LOG OF EXPLORATORY BORING

| | | | |
|---|---|---|---|
| PROJECT NAME | **North Poplar Tree Farm** | BORING NO. | **P-06A** |
| LOCATION | **Riverbend Landfill, McMinnville, Oregon** | PAGE | **2 of 2** |
| DRILLED BY | **GeoTech Explorations, Inc.** | APPROX. GROUND ELEV. | **129.30** |
| DRILL METHOD | **Geoprobe** | TOTAL DEPTH | **20.0'** |
| LOGGED BY | **Craig D. Fanshier, R.G.** | DATE COMPLETED | **10/13/05** |

| SAMPLE NUMBER (SAMPLE METHOD) | RECOVERY (feet) | PID (in ppm) | GROUND WATER LEVEL | DEPTH IN FEET | SAMPLES | WELL DETAILS | LITHO-LOGIC COLUMN | LITHOLOGIC DESCRIPTION |
|---|---|---|---|---|---|---|---|---|
| | | | | 30<br>35<br>40<br>45<br>50 | | | | **WELL COMPLETION DETAILS**<br>0 to 9.7 feet: 1-inch-diameter, Schedule 40 PVC piezometer.<br>9.7 to 19.5 feet: 1-inch-diameter, prepacked Schedule 40 PVC well screen with 0.010-inch machined slots and 1-inch-diameter threaded end cap.<br><br>0 to 0.5 foot: Concrete.<br>0.5 to 7.5 feet: Bentonite chips hydrated with potable water.<br>7.5 to 20.0 feet: 10-20 Colorado Silica Sand.<br><br>PVC Elevation: 131.58<br>Northing: 2566.2<br>Easting: 3363.7 |

**REMARKS**

Geoprobe boring was advanced and soil samples were collected with a 5-foot-long, 2 1/6-inch outside-diameter soil macro-sampler. The borehole was widened to 3.5 inches by advancing a separate geoprobe casing. A 1-inch i.d. schedule 40 PVC piezometer was constructed in the boring using a prepacked 0.010-inch slot well screen and 20-40 sand. A 10-20 sand pack was added to the borehole annulus and topped with bentonite casing seal.

Shaw™ Environmental, Inc.

# SCS ENGINEERS

# BORING LOG

14945 SW Sequoia Parkway, Suite 180
Portland, OR 97224

**BORING NUMBER: P-07A**



**Riverbend Landfill Company**
**Riverbend Landfill**
**McMinnville, Oregon**

**JOB NUMBER: 04212009.00**

REMARKS:
Mobile B-54 drill rig with automatic hammer (140 lb. hammer, 30-inch drop)

| Depth (meters) | Depth (feet) | Sample Location | Sample Number | Blow Counts | OVM (ppm) | USCS Soil Class. | Graphic Log | Description |
|---|---|---|---|---|---|---|---|---|
| 0 | 0 | | | | | | | Surface: natural ground surface (grass) |
| 1 | 5 | | 07A-1 | 2<br>3<br>4 | | ML | | CLAYEY SILT (ML), dark yellowish brown (10YR 4/4), very moist, firm, slight orange brown (oxide) mottling, low to medium plasticity |
| 2 | | | | | | | | |
| 3 | 10 | | 07A-2 | 1<br>1<br>2 | | CL/ML | | SILTY CLAY / CLAYEY SILT (CL/ML), same color as above, wet, soft, slight orange brown (oxide) mottling, low to medium plasticity |
| 4 | | | | | | | | |
| 5 | 15 | | 07A-3 | 1<br>1<br>2 | | CL | | Same as at 10 feet but SILTY CLAY (CL), medium plasticity |
| 6 | 20 | | 07A-4 | 0<br>3<br>4 | | CL | | SILTY CLAY (CL), light olive brown (2.5Y 5/3) with abundant orange brown (oxide) mottling, wet, firm, medium plasticity |
| 7 | | | | | | | | |
| 8 | 25 | | 07A-5 | 2<br>5<br>10 | | ML | | Slightly CLAYEY SILT (ML), same color as at 20 feet but no oxide mottling, wet at top of sample grading to moist, sharp color contact at 26.3 feet to dark gray (5Y 4/1), stiff, low to medium plasticity |
| 9 | 30 | | 07A-6 | 1<br>4<br>5 | | ML<br>CL | | Slightly CLAYEY SILT (ML), dark gray (5Y 4/1), moist, stiff, low to medium plasticity<br>Grades in sample to SILTY CLAY (CL), same color and characteristics as above |
| 10 | | | | | | | | |
| 11 | 35 | | | | | | | Total Depth = 31.0 feet<br>Aboveground completion includes a 6-inch steel protective monument and three bollard posts.<br>Stabilized groundwater level was measured on February 8, 2012. |
| 12 | 40 | | | | | | | |

Completion Detail

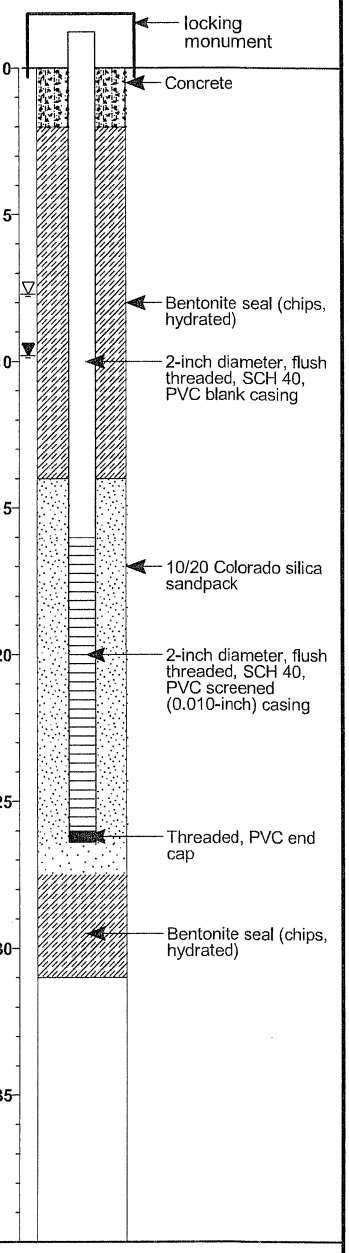


Drilling Company: **Major Drilling Environmental, LLC**
Drilling Method: **Hollow Stem Auger**
Logged By: **David Lamadrid**
Sampling Method: **See legend for explanation of sample types**

Date Started: **2/3/12**
Date Ended: **2/3/12**
Boring Diameter: **10-inch**
Elevation: **145.7 ft.**
Depth to Water: **9.8 ft.**
Total Depth: **31.0 ft.**

STANDARD_LOG RLF_P-07A GINT BOREHOLE LOG.GPJ STD_LOG.GDT 2/17/12

# SCS ENGINEERS

# BORING LOG

14945 SW Sequoia Parkway, Suite 180
Portland, OR 97224

## BORING NUMBER: GT10-01



**Riverbend Landfill Company**
**Riverbend Landfill**
**McMinnville, Oregon**

**JOB NUMBER: 04210010.00**

REMARKS:
Mobile B-54 drill rig with automatic hammer (140 lb. and 300 lb. hammers used, see notes at end of log; 30-inch drop). NWJ rods used.

| Depth (meters) | Depth (feet) | Sample Location | Sample Number | Blow Counts | OVM (ppm) | USCS Soil Class. | Graphic Log | Description |
|---|---|---|---|---|---|---|---|---|
| 0 | 0 | | 1-1 | --- | | ML | | Surface: natural ground surface (grass) |
| 1 | | | | | | | | |
| | 5 | | 1-2 | 3<br>3<br>5 | 0.5 | | | SILT (ML), light olive brown (2.5Y 5/3) with some orange brown oxide (iron) mottling, moist to wet, firm, trace clay, low plasticity |
| 2 | | | 1-3 | --- | | | | |
| 3 | 10 | | | | 0.75 | | | At 10.0 feet (bottom of Shelby tube sample), FINE SANDY SILT (ML), dark yellowish brown (10YR 4/6), moist, sand 10-20 percent, slightly micaceous |
| 4 | | | | | | | | |
| | 15 | | 1-4 | 3<br>2<br>4 | 0.25 | CL | | - At 15 feet, same as above but wet |
| 5 | | | | | | ML | | At 15.8 feet, 2-inch thick CLAY (CL) seam, very dark gray (5Y 3/1), wet, apparent soft consistency, high plasticity |
| | | | 1-5 | --- | | | | At 16.0 feet, SILT (ML), very dark gray (5Y 3/1), wet, firm, faintly micaceous, low to medium plasticity |
| 6 | 20 | | | | 0.75 | | | - At 20.0 feet (bottom of Shelby tube sample), same silt at above |
| 7 | | | 1-6 | 5<br>5<br>5 | 0.25 | ML | | Thinly bedded SILT (ML) and CLAYEY SILT (ML), very dark gray (5Y 3/1), moist, stiff, 2- to 4-inch thick beds with varying clay content from 0 to 10-20 percent, moist, stiff, with two clay lenses (1.5 inch thick) |
| | 25 | | 1-7 | --- | | | | |
| 8 | | | | | | CL | | At 27.5 feet (bottom of Shelby tube sample), SILTY CLAY (CL), very dark gray (5Y 3/1), moist, medium to high plasticity |
| 9 | 30 | | 1-8 | 0<br>3<br>7 | 1.5 | | | CLAY (CL), dark gray (5Y 4/1), moist, very soft, massive<br>- At 30.7 feet, sharp color change to very dark gray (5Y 3/1) with greenish tint, damp to moist, stiff, faintly micaceous, more apparent firmness than above, medium to high plasticity |
| 10 | | | | | | | | |
| | 35 | | 1-9 | 0<br>3<br>4 | 1.0 | | | - Same as above but greenish gray, firm, faint oxide (iron) mottling |
| 11 | | | 1-10 | --- | | | | |
| 12 | 40 | | | | | | | Driller reports harder push last approximately 4 inches of Shelby tube sample No. 1-10 |

Completion Detail

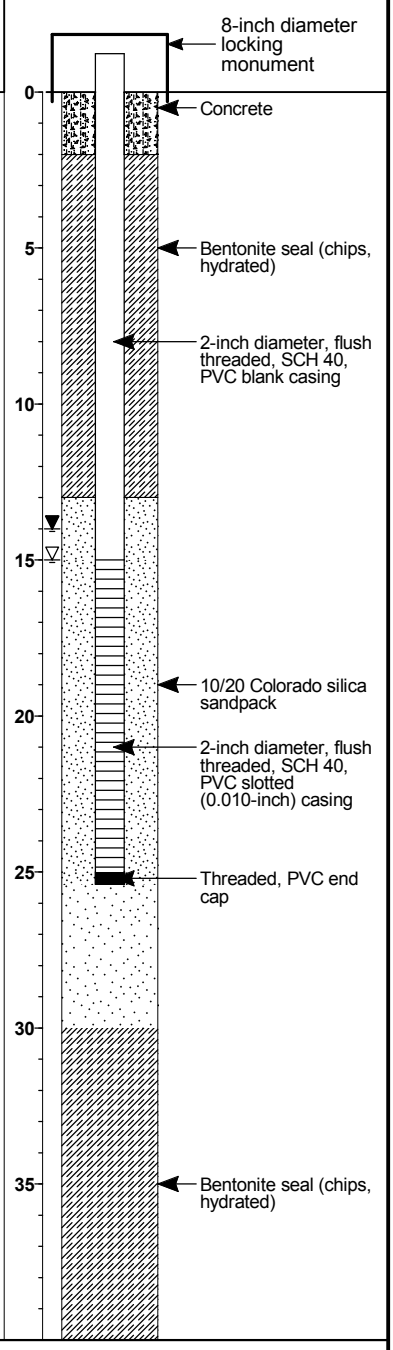


Drilling Company: **Major Drilling Environmental, LLC**
Drilling Method: **Mud Rotary**
Logged By: **David Lamadrid**
Sampling Method: **See legend for explanation of sample types**

Date Started: **9/9/10**
Date Ended: **9/10/10**
Boring Diameter: **5.9" (to 26.0 ft.), 4.9" (from 26.0 - 66.5 ft.)**
Elevation: **143.8 ft.**
Depth to Water: **14.0 ft.**
Total Depth: **66.5 ft.**

STANDARD_LOG RLF_HSC GEOTECHNICAL BOREHOLE LOGS_V0.3.GPJ STD_LOG.GDT 2/23/11

SCS ENGINEERS

# BORING LOG

14945 SW Sequoia Parkway, Suite 180
Portland, OR 97224

**BORING NUMBER: GT10-01**

Page 2 of 2

**Riverbend Landfill Company**

**JOB NUMBER: 04210010.00**

| Depth (feet) | Sample Location | Sample Number | Blow Counts | OVM (ppm) | USCS Soil Class. | Graphic Log | Description |
|---|---|---|---|---|---|---|---|
| 40 | | 1-11 | 12<br>15<br>22 | 1.0 | CL | | At 40.0 feet, CLAY (CL) with fine sand and gravel, mottled light olive brown (2.5Y 5/3) and orange brown (iron oxide), moist, hard, very weathered appearance, fine subrounded gravel 5-15 percent at top of sample, fine to coarse subrounded gravel 20-30 percent to 1-inch diameter at bottom 3 inches of sample |
| 45 | | 1-12 | 15<br>28<br>32 | | GC | | SANDY, CLAYEY GRAVEL (GC), mottled very pale brown (10YR 7/4), light olive brown (2.5Y 5/3), and orange brown (iron oxide), wet, dense, fine to coarse sand (f:m:c = 20:40:40), fine to coarse subrounded gravel to 2-inch diameter, weathered appearance |
| 50 | | 1-13 | 15<br>21<br>33 | | SW/GW | | GRAVELLY SAND/SANDY GRAVEL (SW/GW), dark yellowish brown (10YR 3/4), wet, dense, trace fines, weathered appearance, fine to coarse sand (f:m:c = 10:40:50), fine to coarse subrounded gravel to 2-inch diameter |
| 55 | | 1-14 | 13<br>20<br>22 | | | | - Same as above but black (7.5YR N2/), medium dense, fine to coarse sand (f:m:c = 30:40:30), fine to coarse gravel to 1-inch diameter, predominantly fine gravel<br>At 59.0 feet, driller reports softer drilling |
| 60 | | 1-15 | 3<br>4<br>4 | | SP | | SAND (SP), black (7.5YR N2/), wet, loose, very fine to fine sand, few scattered fine gravels to 1/4-inch diameter, trace medium grained sand, wood layer at least 4 inches thick observed at bottom of upper ring and top of lower ring samples<br>- At 63.0 feet, driller reports harder drilling<br>- At 65.0 feet, GRAVELLY SAND / SANDY GRAVEL (SW/GW), black (7.5YR N2/), wet, medium dense, fine to coarse sand (f:m:c = 40:30:30) but coarsening with depth, fine to coarse subrounded gravel to 1-inch diameter, predominantly fine gravel |
| 65 | | 1-16 | 9<br>14<br>17 | | SW/GW | | |

Total Depth = 66.5 feet

NOTES:

1. Drilled adjacent borehole with hollow stem augers to collect bulk soil cuttings sample from 0 to 5.0 feet.

2. Initially used 140 lb. hammer for sample collection; switched to 300 lb. hammer before collecting sample 1-12 at 45 feet and for remainder of borehole. Hammers not used for Shelby tube samples.

3. Pushed 36-inch Shelby tube sample 30 inches only.

4. Static groundwater level measured on September 13, 2010.

Completion Detail

Bentonite seal (chips, hydrated)

STANDARD_LOG RLF_HSC GEOTECHNICAL BOREHOLE LOGS_V0.3.GPJ STD_LOG.GDT 2/23/11

# SCS ENGINEERS

# BORING LOG

14945 SW Sequoia Parkway, Suite 180
Portland, OR 97224

## BORING NUMBER: GT10-11



**Riverbend Landfill Company**
**Riverbend Landfill**
**McMinnville, Oregon**

**JOB NUMBER: 04210010.00**

REMARKS:
Mobile B-54 drill rig with automatic hammer (140 lb. and 300 lb. hammers used, see notes at end of log; 30-inch drop). NWJ rods used.

| Depth (meters) | Depth (feet) | Sample Location | Sample Number | Blow Counts | OVM (ppm) | USCS Soil Class. | Graphic Log | Description |
|---|---|---|---|---|---|---|---|---|
| 0 | 0 | | 11-1 | --- | | CL | | Surface: natural ground surface (grass) |
| 1 | | | | | | | | |
| | 5 | | 11-2 | 2<br>2<br>3 | | | | At 5.0 feet, SILTY CLAY (CL), yellowish brown (10YR 5/4), moist, firm, silt 30-40 percent, low to medium plasticity |
| 2 | | | 11-3 | --- | | | | |
| 3 | 10 | | | | | ML | | At 10.0 feet (bottom of Shelby tube sample), CLAYEY SILT (ML), yellowish brown (10YR 5/4), moist to wet, clay 20-30 percent |
| 4 | | | | | | | | |
| | 15 | | 11-4 | 1<br>2<br>4 | | | | Same as above, but wet, firm, with some visibly wet silt lenses up to 1.5-inch thick |
| 5 | | | | | | | | |
| 6 | 20 | | 11-5 | 1<br>2<br>4 | | | | SILT (ML) with clay, light yellowish brown (2.5Y 6/4), moist to wet, firm, clay content quickly increases with depth to 30-40 percent, faintly micaceous |
| 7 | | | 11-6 | --- | | | | |
| | 25 | | | | | CL | | At 25 feet (bottom of Shelby tube sample), CLAY (CL), dark olive gray (5Y 3/2), moist to wet, massive, very faintly micaceous, medium to high plasticity |
| 8 | | | | | | | | |
| 9 | 30 | | 11-7 | 2<br>2<br>3 | | | | CLAY (CL) with silt (5-15 percent), same appearance as above, with silt lenses up to 1.5-inch thick |
| 10 | | | 11-8 | --- | | | | |
| | 35 | | | | | | | At 35 feet (bottom of Shelby tube sample), CLAY (CL), same appearance as at 25 feet |
| 11 | | | | | | | | |
| 12 | 40 | | | | | | | |

Completion Detail

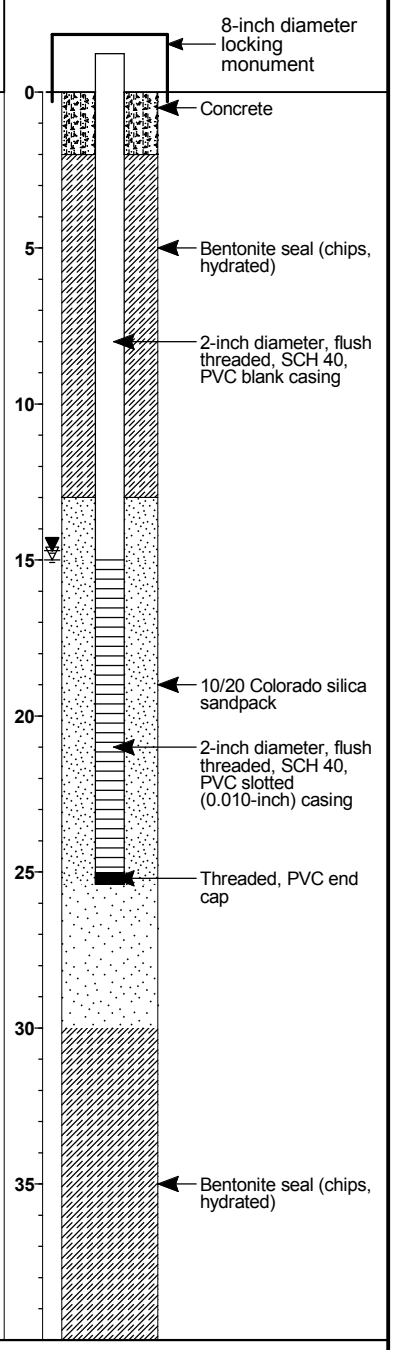


Drilling Company: **Major Drilling Environmental, LLC**
Drilling Method: **Mud Rotary**
Logged By: **David Lamadrid**
Sampling Method: **See legend for explanation of sample types**

Date Started: **9/8/10**
Date Ended: **9/9/10**
Boring Diameter: **5.9" (to 26.0 ft.), 4.9" (from 26.0 - 60.9 ft.)**
Elevation: **149.3 ft.**
Depth to Water: **14.7 ft.**
Total Depth: **60.9 ft.**

STANDARD_LOG RLF_HSC GEOTECHNICAL BOREHOLE LOGS_V0.3.GPJ STD_LOG.GDT 2/23/11

**Riverbend Landfill Company**

**JOB NUMBER: 04210010.00**

| Depth (meters) | Depth (feet) | Sample Location | Sample Number | Blow Counts | OVM (ppm) | USCS Soil Class. | Graphic Log | Description |
|---|---|---|---|---|---|---|---|---|
| | 40 | | 11-9 | 4<br>5<br>6 | | | | CLAY (CL), dark olive gray (5Y 3/2) with greenish tint, moist to wet, stiff, massive, scattered white (calcium?) grains (medium grain size), medium plasticity |
| 13 | | | | | | | | |
| | 45 | | 11-10 | 6<br>6<br>7 | | CL | | At 45 feet, same as above but with trace fine sand, minor orange brown oxide (iron) mottling, increasing sand with depth to 10-20 percent<br>- At 46 feet, sharp contact with FINE SANDY CLAY (CL), mottled olive (5Y 4/4) and light olive brown (2.5Y 5/6), moist to wet, stiff, few fine gravels at contact, low to medium plasticity<br>- At bottom 0.5 inch in sample 11-10, SLIGHTLY CLAYEY FINE SAND (SC) |
| 14 | | | 11-11 | --- | | | | - Shelby tube sample 11-11 damaged at bottom, only able to push tube 24 inches |
| 15 | | | | | | | | |
| | 50 | | 11-12 | 11<br>14<br>23 | | | | - At 50 feet, CLAY (CL), dark olive gray (5Y 3/2), damp, hard, moderately indurated, some orange brown oxide (iron) mottling from 50.0 to 50.5 feet, weak fracture structure (crumbly), low plasticity |
| 16 | | | | | | | | |
| | 55 | | 11-13 | 32<br>48<br>50/2" | | | | CLAY (CL) with sand, very dark gray (5Y 3/1), damp, hard, trace scattered fine to medium sand (f:m = 80:20), two hairline calcium (?) filled veins, low plasticity |
| 17 | | | | | | | | |
| 18 | | | | | | | | |
| | 60 | | 1-14 | 28<br>50/5" | | | | Same as above, but fine to coarse scattered sand 10-20 percent |
| 19 | | | | | | | | Total Depth = 60.9 feet |
| | 65 | | | | | | | NOTES:<br>1. Drilled adjacent borehole with hollow stem augers to collect bulk soil cuttings sample from 0 to 5.0 feet.<br>2. Hammer energy calibration performed for GT10-11. Used 140 lb. hammer for SPT samplers and 300 lb. hammer for California Modified samplers.<br>3. Pushed 36-inch long Shelby tube sample 30 inches only.<br>4. Static groundwater level measured on September 13, 2010. |
| 20 | | | | | | | | |
| 21 | | | | | | | | |
| | 70 | | | | | | | |
| 22 | | | | | | | | |
| | 75 | | | | | | | |
| 23 | | | | | | | | |
| 24 | | | | | | | | |
| | 80 | | | | | | | |
| 25 | | | | | | | | |
| 26 | 85 | | | | | | | |

Completion Detail

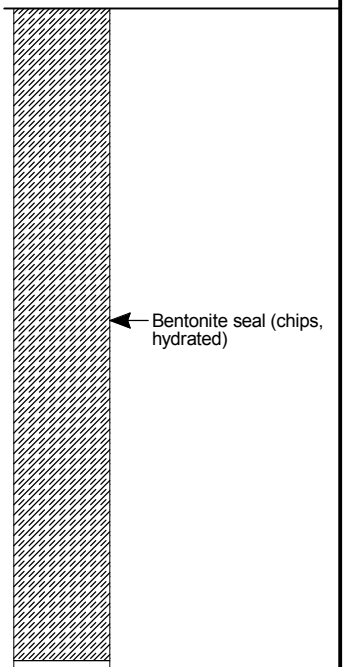


STANDARD_LOG RLF_HSC GEOTECHNICAL BOREHOLE LOGS_V0.3.GPJ STD_LOG.GDT 2/23/11

# SCS ENGINEERS

# BORING LOG

14945 SW Sequoia Parkway, Suite 180
Portland, OR 97224

## BORING NUMBER: GT10-12



**Riverbend Landfill Company**
**Riverbend Landfill**
**McMinnville, Oregon**

**JOB NUMBER: 04210010.00**

REMARKS:
Mobile B-54 drill rig with automatic hammer (140 lb. and 300 lb. hammers used, see notes at end of log; 30-inch drop). NWJ rods used.

| Depth (meters) | Depth (feet) | Sample Location | Sample Number | Blow Counts | OVM (ppm) | USCS Soil Class. | Graphic Log | Description |
|---|---|---|---|---|---|---|---|---|
| 0 | 0 | | 12-1 | --- | | CL/ML | | Surface: natural ground surface (grass) |
| 1 | | | | | | | | |
| | 5 | | 12-2 | 1<br>2<br>3 | 0.75 | | | SILTY CLAY / CLAYEY SILT (CL/ML), yellowish brown (10YR 5/4), moist, firm, few micropores, medium plasticity |
| 2 | | | 12-3 | --- | | | | |
| 3 | 10 | | | | 0.75 | ML | | At 10.0 feet (bottom of Shelby tube sample), SILT (ML), yellowish brown (10YR 5/4), moist to wet, slight orange brown oxide (iron) mottling |
| 4 | | | | | | | | |
| | 15 | | 12-4 | 3<br>3<br>4 | 0.5 | | | Same as above, but wet, firm, trace to some clay (less than 15 percent), low to medium plasticity |
| 5 | | | 12-5 | 2<br>2<br>2 | 0.25 | | | Same as at 10.0 feet, but with thin beds up to 4 inches thick with varying clay content (trace up to 20-30 percent) |
| 6 | 20 | | 12-6 (N.R.) | --- | | | | No recovery in Shelby tube sample 12-6 |
| 7 | | | 12-7 | 4<br>4<br>7 | 1.0 | | | SILT (ML), dark gray (5Y 4/1), moist, stiff, trace clay at top of sample, faintly micaceous, low plasticity |
| | 25 | | | | | | | |
| 8 | | | 12-8 | 2<br>4<br>7 | 1.75 | | | Same as above, but with 2-inch lens of clayey (20-30 percent) silt |
| 9 | 30 | | 12-9 | --- | | | | |
| 10 | | | | | | | | At 22.5 feet (bottom of Shelby tube sample), same as 22.5 feet but with trace clay |
| | 35 | | 12-10 | 4<br>5<br>5 | 1.0 | CL | | CLAY (CL), very dark gray (5Y 3/1) with slight greenish tint, moist, stiff, medium to high plasticity |
| 11 | | | | | | | | |
| 12 | 40 | | | | | | | |

Completion Detail

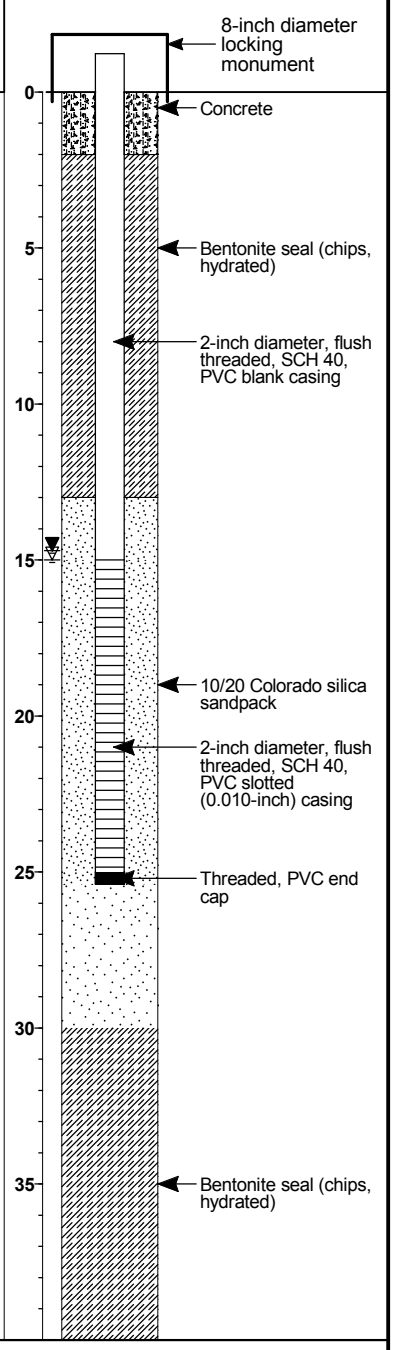


Drilling Company: **Major Drilling Environmental, LLC**
Drilling Method: **Mud Rotary**
Logged By: **David Lamadrid**
Sampling Method: **See legend for explanation of sample types**

Date Started: **9/14/10**
Date Ended: **9/14/10**
Boring Diameter: **5.9" (to 26.0 ft.), 4.9" (from 26.0 - 66.5 ft.)**
Elevation: **150.6 ft.**
Depth to Water: **14.7 ft.**
Total Depth: **55.7 ft.**

STANDARD_LOG RLF_HSC GEOTECHNICAL BOREHOLE LOGS_V0.3.GPJ STD_LOG.GDT 2/23/11

**SCS ENGINEERS**

# BORING LOG

14945 SW Sequoia Parkway, Suite 180
Portland, OR 97224

**BORING NUMBER: GT10-12**



**Riverbend Landfill Company**

**JOB NUMBER: 04210010.00**

| Depth (meters) | Depth (feet) | Sample Location | Sample Number | Blow Counts | OVM (ppm) | USCS Soil Class. | Graphic Log | Description |
|---|---|---|---|---|---|---|---|---|
| | 40 | | 12-11 | --- | | | | At 42.5 feet (bottom of Shelby tube sample), CLAY (CL), very dark gray (5Y 3/1) with slight greenish tint, moist, medium to high plasticity |
| 13 | | | | | 0.5 | | | |
| | 45 | | 12-12 | 14<br>9<br>9 | 1.25 | CL | | At 45 feet, SANDY, GRAVELLY CLAY (CL), dark olive gray (5Y 3/2), moist, very stiff, medium to coarse sand 10-20 percent, fine to coarse subrounded gravel 30-40 percent to 1-inch diameter, some orange brown oxide (iron) mottling<br>- At 45.7 feet, sharp contact with SANDY CLAY (CL) with fine gravels, dark yellowish brown (10YR 4/6), moist, very stiff, fine to coarse sand (f:m:c = 50:40:40) 20-30 percent, weathered appearance |
| 14 | | | | | | | | |
| 15 | | | | | | | | |
| | 50 | | 12-13 | 27<br>50/3" | | CL/GC<br>SLTST | | - At 50 feet, SANDY GRAVELLY CLAY / CLAYEY GRAVEL (CL/GC), dark yellowish brown (10YR 4/6) with orange brown oxide (iron) mottloing, wet, fine to coarse sand (f:m:c = 50:40:40), fine to coarse subrounded gravel to 1-inch diameter (predominantly fine), weathered appearance<br>- At 50.5 feet, SILTSTONE (SLTST), dark gray (2.5Y N4/), damp, hard, moderately indurated, slightly friable, scattered white (calcium?) flecks and nodules |
| 16 | | | | | | | | |
| | 55 | | 12-14 | 25<br>50/2" | | SLTST | | - At 55 feet, same as above |
| 17 | | | | | | | | |
| 18 | | | | | | | | Total Depth = 55.7 feet |
| | 60 | | | | | | | NOTES:<br>1. Drilled adjacent borehole with hollow stem augers to collect bulk soil cuttings sample from 0 to 5.0 feet.<br>2. Initially used 140 lb. hammer for sample collection; switched to 300 lb. hammer before collecting sample 12-14 at 55 feet.<br>3. Pushed 36-inch Shelby tube sample 30 inches only.<br>4. Static groundwater level measured on September 15, 2010. |
| 19 | | | | | | | | |
| | 65 | | | | | | | |
| 20 | | | | | | | | |
| 21 | | | | | | | | |
| | 70 | | | | | | | |
| 22 | | | | | | | | |
| 23 | | | | | | | | |
| | 75 | | | | | | | |
| 24 | | | | | | | | |
| | 80 | | | | | | | |
| 25 | | | | | | | | |
| 26 | 85 | | | | | | | |

Completion Detail

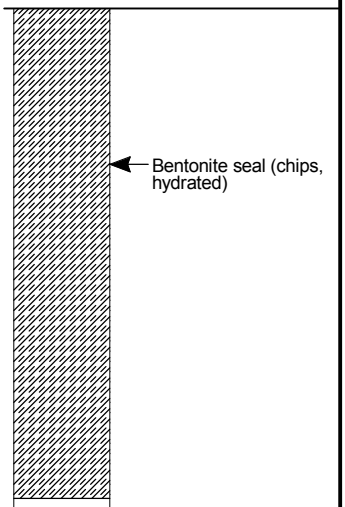

# SCS ENGINEERS

# BORING LOG

14945 SW Sequoia Parkway, Suite 180
Portland, OR 97224

## BORING NUMBER: SA-BH-1



**Riverbend Landfill Company**
**Riverbend Landfill**
**McMinnville, Oregon**

**JOB NUMBER: 04210010.00**

REMARKS:
Mobile B-53 drill rig with automatic hammer (140 lb. hammer, 30-inch drop)

| Depth (meters) | Depth (feet) | Sample Location | Sample Number | Blow Counts | OVM (ppm) | USCS Soil Class. | Graphic Log | Description |
|---|---|---|---|---|---|---|---|---|
| 0 | 0 | | BH-1-1 | 2<br>4<br>4 | | ML | | Surface: natural ground surface (harvested wheat field)<br>SILT (ML), yellowish brown (10YR 5/4), dry to damp, firm, soom rootlets |
| 1 | | | | | | | | |
| 5 | 2 | | BH-1-2 | 4<br>7<br>8 | | CL | | CLAY (CL) with silt, dark yellowish brown (10YR 4/6), moist, stiff, rare fine gravel, faintly micaceous, slightly blocky texture, few filled micropores, medium plasticity |
| 10 | 3 | | BH-1-3 | 1<br>1<br>3 | | CL | | - At 11.0 feet, silt increases to 20 to 30 percent, moist to wet, 1-inch thick hard brown clay lens (slightly crumbly) at contact |
| 4 | | | | | | | | CLAYEY SILT (ML), yellowish brown (10YR 5/4), wet, trace to some clay up to 20 percent, faintly micaceous, low plasticity |
| 15 | 5 | | BH-1-4 | 1<br>2<br>3 | | ML | | |
| | | | | | | CL | | CLAY (CL) with silt, light olive brown (2.5Y 5/3), moist to wet, slight orange brown oxide (iron) mottling<br>- At 17.6 feet, 4-inch thick silt lens, wet |
| 20 | 6 | | BH-1-5 | 0<br>2<br>3 | | | | - At 19.2 feet, CLAY (CL) with silt, very dark gray (5Y 3/1) with greenish tint, firm, massive, medium to high plasticity |
| | 7 | | | | | | | |
| 25 | 8 | | | | | | | Total Depth = 23.0 feet<br>Aboveground construction includes 8-inch protective steel monument and three bollard posts.<br>Stabilized groundwater level measured on Sept. 1, 2010. |
| 30 | 9 | | | | | | | |
| | 10 | | | | | | | |
| 35 | 11 | | | | | | | |
| | 12 | | | | | | | |
| 40 | | | | | | | | |

Completion Detail

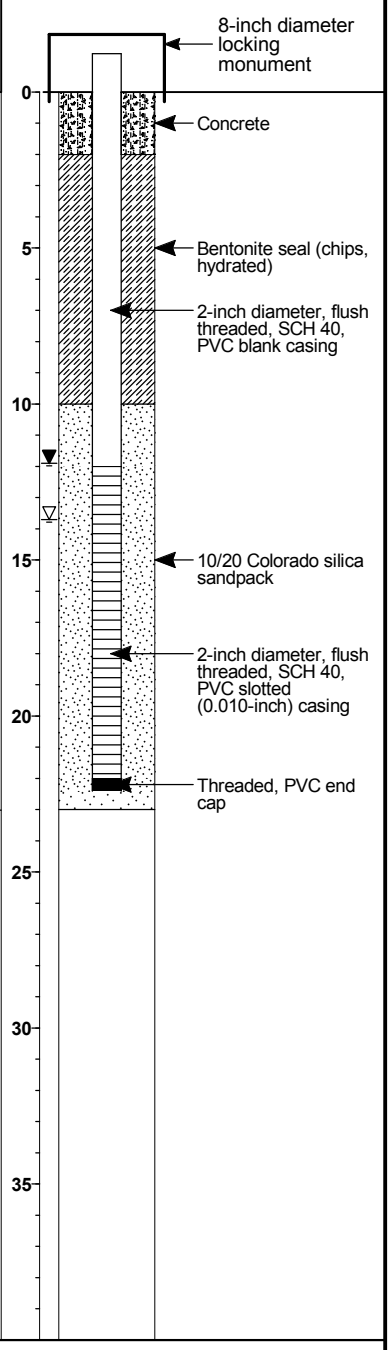


Drilling Company: **Major Drilling Environmental, LLC**
Drilling Method: **Hollow Stem Auger**
Logged By: **David Lamadrid**
Sampling Method: **See legend for explanation of sample types**

Date Started: **8/24/10**
Date Ended: **8/24/10**
Boring Diameter: **10-inch**

Elevation: **152.5 ft.**
Depth to Water: **11.9 ft.**
Total Depth: **23.0 ft.**

STANDARD_LOG RLF_STREAM ALIGNMENT BOREHOLE LOGS.GPJ STD_LOG.GDT 3/8/11

# SCS ENGINEERS

# BORING LOG

14945 SW Sequoia Parkway, Suite 180
Portland, OR 97224

## BORING NUMBER: SA-BH-3



**Riverbend Landfill Company**
**Riverbend Landfill**
**McMinnville, Oregon**

**JOB NUMBER: 04210010.00**

REMARKS:
Mobile B-53 drill rig with automatic hammer (140 lb. hammer, 30-inch drop)

| Depth (meters) | Depth (feet) | Sample Location | Sample Number | Blow Counts | OVM (ppm) | USCS Soil Class. | Graphic Log | Description |
|---|---|---|---|---|---|---|---|---|
| 0 | 0 | | BH-3-1 | 3<br>4<br>5 | | ML | | Surface: natural ground surface (harvested wheat field)<br>CLAYEY SILT (ML), dark brown (10YR 4/3), dry to damp, firm, clay 10-20 percent, some rootlets |
| 1 | | | | | | | | |
| 5 | 2 | | BH-3-2 | 2<br>3<br>5 | | CL | | CLAY (CL) with silt, olive brown (2.5Y 4/3), moist, firm, slight orange brown oxide (iron) mottling, faintly micaceous, faint blocky texture, few filled micropores |
| 10 | 3 | | BH-3-3 | 3<br>3<br>4 | | CL/ML | | Bedded CLAY (CL) with silt and SILT (ML), olive brown (2.5Y 4/3), moist to wet, firm, beds 4 to 8 inches thick, contacts are moderately sharp<br>At 12.5 feet, wet (visible water in silt beds) |
| 15 | 4<br>5 | | BH-3-4 | 1<br>2<br>4 | | | | Same as above |
| 20 | 6 | | BH-3-5 | 3<br>5<br>9 | | CL | | Same as above<br>CLAY (CL), very dark gray (5Y 3/1) with greenish tint, moist to wet, stiff, massive, medium to high plasticity<br>Grades to clay with trace to some silt in thin zones |
| 25 | 7<br>8 | | BH-3-6 | 2<br>4<br>8 | | | | Grades to moist |
| 30 | 9 | | | | | | | Total Depth = 26.5 feet<br>Sampled to 26.5 feet; drilled out borehole to 25.0 feet for piezometer installation.<br>Aboveground construction includes 8-inch protective steel monument and three bollard posts.<br>Stabilized groundwater level measured on Sept. 2, 2010. |
| | 10 | | | | | | | |
| 35 | 11 | | | | | | | |
| 40 | 12 | | | | | | | |

Completion Detail

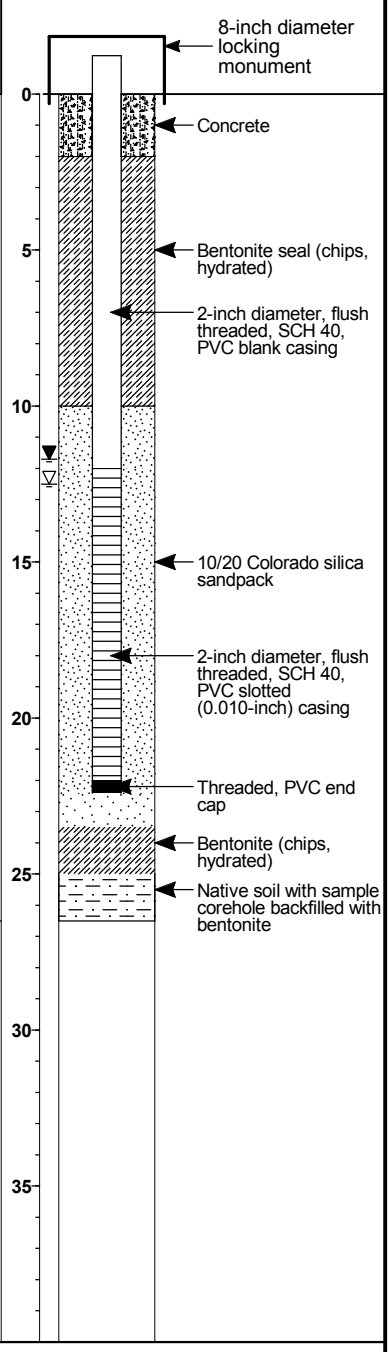


Drilling Company: **Major Drilling Environmental, LLC**
Drilling Method: **Hollow Stem Auger**
Logged By: **David Lamadrid**
Sampling Method: **See legend for explanation of sample types**

Date Started: **8/24/10**
Date Ended: **8/24/10**
Boring Diameter: **10-inch**

Elevation: **152.4 ft.**
Depth to Water: **11.7 ft.**
Total Depth: **26.5 ft.**

STANDARD_LOG RLF_STREAM ALIGNMENT BOREHOLE LOGS.GPJ STD_LOG.GDT 3/8/11

# SCS ENGINEERS

# BORING LOG

14945 SW Sequoia Parkway, Suite 180
Portland, OR 97224

## BORING NUMBER: SA-BH-5



**Riverbend Landfill Company**
**Riverbend Landfill**
**McMinnville, Oregon**

**JOB NUMBER: 04210010.00**

REMARKS:
Mobile B-53 drill rig with automatic hammer (140 lb. hammer, 30-inch drop)

| Depth (meters) | Depth (feet) | Sample Location | Sample Number | Blow Counts | OVM (ppm) | USCS Soil Class. | Graphic Log | Description |
|---|---|---|---|---|---|---|---|---|
| 0 | 0 | | BH-5-1 | 3<br>5<br>5 | | ML | | Surface: natural ground surface (harvested wheat field)<br>CLAYEY SILT (ML), dark brown (10YR 4/3), dry todamp, stiff, some roots and rootlets |
| 1 | 5 | | BH-5-2 | 4<br>6<br>7 | | | | CLAYEY SILT (ML), yellowish brown (10YR 5/4), damp to moist, stiff, clay 30-40 percent, slight dark brown mottling, faintly micaceous, low to medium plasticity |
| 2 | | | | | | | | - Grades to 20-30 percent clay, moist |
| 3 | 10 | | BH-5-3 | 2<br>2<br>3 | | | | - CLAYEY SILT (ML) as above but bedded, beds 1 to 2 feet thick with varying clay content (10 to 40 percent), firm, few clay-filled micropores |
| 4 | | | | | | | | |
| 5 | 15 | | BH-5-4 | 1<br>2<br>3 | | | | - At 14.0 feet, becomes moist to wet<br>- Same as at 10 feet. |
| 6 | 20 | | BH-5-5 | 1<br>2<br>2 | | | | - At 17.0 feet, becomes wet<br>- Same as at 10 feet. |
| 7 | | | | | | | | |
| 8 | 25 | | BH-5-6 | 1<br>2<br>4 | | CL | | SILTY CLAY / CLAYEY SILT (CL/ML), mottled light olive brown (2.5Y 5/3) and dark yellowish brown (10YR 4/6), wet, firm, few filled micropores, faintly micaceous, medium to high plasticity |
| 9 | 30 | | | | | | | Total Depth = 28.5 feet<br>Aboveground construction includes 8-inch protective steel monument and three bollard posts.<br>Stabilized groundwater level measured on Sept. 1, 2010. |
| 10 | | | | | | | | |
| 11 | 35 | | | | | | | |
| 12 | 40 | | | | | | | |

### Completion Detail

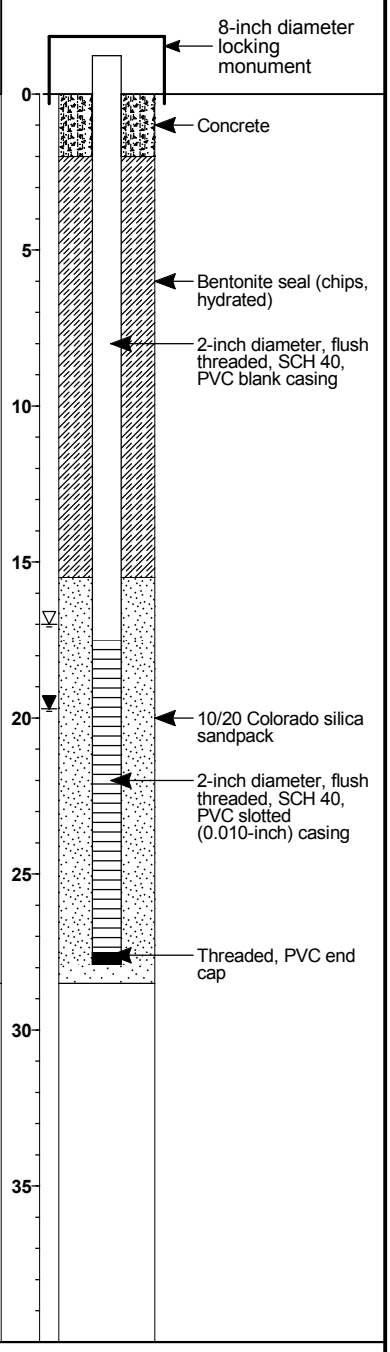


Drilling Company: **Major Drilling Environmental, LLC**
Drilling Method: **Hollow Stem Auger**
Logged By: **David Lamadrid**
Sampling Method: **See legend for explanation of sample types**

Date Started: **8/23/10**
Date Ended: **8/23/10**
Boring Diameter: **10-inch**

Elevation: **148.1 ft.**
Depth to Water: **19.7 ft.**
Total Depth: **28.5 ft.**

STANDARD_LOG RLF_STREAM ALIGNMENT BOREHOLE LOGS.GPJ STD_LOG.GDT 3/8/11

# SCS ENGINEERS

# BORING LOG

14945 SW Sequoia Parkway, Suite 180
Portland, OR 97224

## BORING NUMBER: SA-BH-6



**Riverbend Landfill Company**
**Riverbend Landfill**
**McMinnville, Oregon**

**JOB NUMBER: 04210010.00**

REMARKS:
Mobile B-53 drill rig with automatic hammer (140 lb. hammer, 30-inch drop)

| Depth (meters) | Depth (feet) | Sample Location | Sample Number | Blow Counts | OVM (ppm) | USCS Soil Class. | Graphic Log | Description |
|---|---|---|---|---|---|---|---|---|
| 0 | 0 | | BH-6-1 | 3<br>4<br>4 | | CL | | Surface: natural ground surface (harvested wheat field)<br>CLAY (CL), dark yellowish brown (10YR 4/4), damp, firm, few small black (carbonized?) soft nodules to 1/8-inch diameter, roots and rootlets to 2.0 feet, medium plasticity when wet |
| 1 | 5 | | BH-6-2 | 2<br>4<br>4 | | | | - At 7.0 feet, becomes moist |
| 3 | 10 | | BH-6-3 | 2<br>3<br>2 | | CL | | At 9.0 feet, grades to SILTY CLAY (CL), dark yellowish brown as above but with slight light olive brown (2.5Y 5/3) and orange brown oxide (iron) mottling, moist, firm, silt 10-20%, faintly micaceous, slight blocky texture, medium plasticity |
| 4 | 15 | | BH-6-4 | 1<br>1<br>1 | | | | - At 14.0 feet, becomes moist to wet<br>- At 15.0 feet, gradationally becomes medium to high plasticity, very soft |
| 6 | 20 | | BH-6-5 | 0<br>0<br>1 | | CL | | SILTY CLAY (CL), dark olive gray (5Y 3/2) with some orange brown oxide (iron) mottling, moist to wet, very soft, silt 20-30%, medium to high plasticity<br>- At 21.0 feet, grades to clay as above but no silt |
| 8 | 25 | | | | | | | Total Depth = 25.0 feet<br>Aboveground construction includes 8-inch protective steel monument and three bollard posts.<br>Stabilized groundwater level measured on Oct. 5, 2010. |
| 9 | 30 | | | | | | | |
| 11 | 35 | | | | | | | |
| 12 | 40 | | | | | | | |

Completion Detail

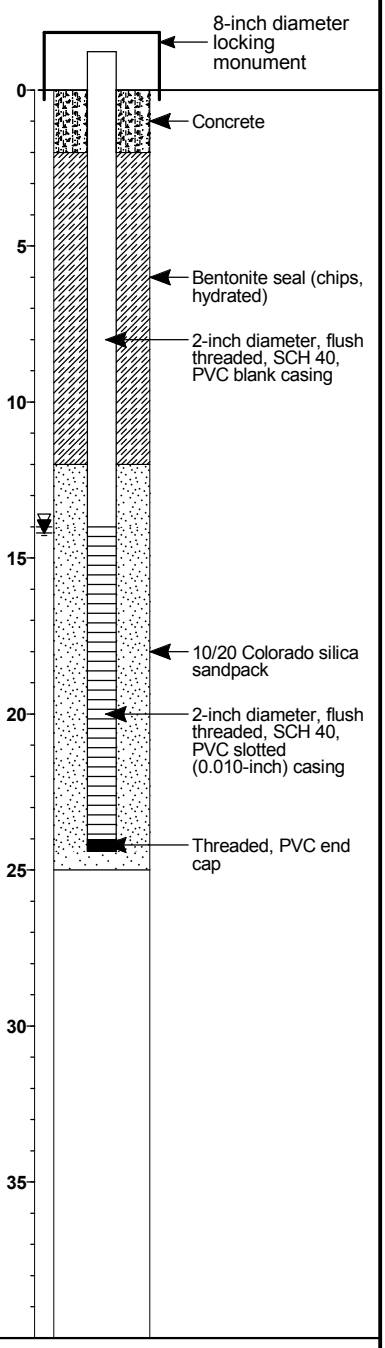


Drilling Company: **Major Drilling Environmental, LLC**
Drilling Method: **Hollow Stem Auger**
Logged By: **David Lamadrid**
Sampling Method: **See legend for explanation of sample types**

Date Started: **9/28/10**
Date Ended: **9/29/10**
Boring Diameter: **10-inch**

Elevation: **123.8 ft.**
Depth to Water: **14.2 ft.**
Total Depth: **25.0 ft.**

STANDARD_LOG RLF_STREAM ALIGNMENT BOREHOLE LOGS.GPJ STD_LOG.GDT 3/8/11

# APPENDIX B

## Landfill Gas Monitoring Plan

SCS ENGINEERS









# APPENDIX B

# LANDFILL GAS MONITORING PLAN

**Riverbend Landfill**
**Yamhill County, Oregon**

**December 2, 2014**

# Table of Contents

**Section** **Page**

List of Tables ..... iii
List of Figures ..... iv
List of Attachments ..... iv
1.0 Introduction ..... 1
2.0 General Site Information ..... 2
2.1 Site Description and History ..... 2
2.2 Structures and Land Use ..... 2
2.3 Climatic Conditions ..... 2
2.4 Landfill Gas Collection and Control System ..... 3
3.0 Regulatory Requirements ..... 4
3.1 State Regulations ..... 4
4.0 Landfill Gas Monitoring Program ..... 5
4.1 Landfill Gas Monitoring Network ..... 5
4.1.1 Compliance Boundary Landfill Gas Probes ..... 5
4.1.2 Performance Evaluation Landfill Gas Probes ..... 5
4.1.3 Future Modifications to Landfill Gas Monitoring Network ..... 5
4.1.4 On-Site Structures ..... 6
4.2 Landfill Gas Monitoring and Parameters ..... 6
4.2.1 General Monitoring Procedures ..... 6
4.2.2 Landfill Gas Probe Monitoring ..... 6
4.2.3 On-Site Structure Monitoring ..... 7
4.2.4 Barhole Probe Monitoring ..... 7
5.0 Response Actions and Reporting ..... 9
5.1 Follow-up Actions in Response to Regulatory Exceedances ..... 9
5.1.1 On-Site Structures ..... 9
5.1.2 LFG Compliance Probes ..... 9
5.1.3 Barhole Probes ..... 10
5.2 Reporting ..... 10

## List of Tables

Table B-1 Landfill Gas Probe Monitoring Network Construction Information

Table B-2 Landfill Gas Monitoring Schedule and Parameters

## List of Figures

Figure B-1 Site Location Map

Figure B-2 Landfill Gas Monitoring Network

## List of Attachments

Attachment A Applicable Landfill Gas Regulations

Attachment B Landfill Gas Probe Boring Logs and Construction Details

# 1.0 INTRODUCTION

This document provides an updated Landfill Gas Monitoring Plan (LFGMP) for the Riverbend Landfill (RL), which is owned and operated by the Riverbend Landfill Company (RLC). This LFGMP presents updated information on site conditions and the landfill gas (LFG) monitoring network including (1) modifications of the LFG probe monitoring network, and (2) the construction of a LFG gas to energy facility (LFGTEF). This LFGMP supersedes the Oregon Department of Environmental Quality (DEQ) approved LFGMP, which was incorporated into RL's environmental monitoring plan dated December 2007.[1] An updated version of the LFGMP dated July 2012[2] was previously submitted to the DEQ; however, RLC did not receive formal approval of the updated 2012 LFGMP from the DEQ as of July 2013.

LFG monitoring described in this plan is consistent with (1) U.S. Environmental Protection Agency (EPA) regulations for Municipal Solid Waste Landfills (Subtitle D) (40 Code of Federal Regulations [CFR], Part 258); (2) Oregon Administrative Rule (OAR) 340-94-040(5) and 340-94-060(4) for Municipal Solid Waste Landfills; and (3) LFG monitoring requirements specified in the RL's solid waste disposal site permit (SWDP) No. 345.

This LFGMP is comprised of the following sections:

- **Section 2** provides information on the site conditions and structures, operational history, and describes the gas collection and control system (GCCS).
- **Section 3** summarizes the regulatory requirements for LFG monitoring.
- **Section 4** presents the LFG monitoring program.
- **Section 5** outlines data evaluation, response actions, and reporting requirements.

[1] Shaw Environmental, Inc., 2007, Environmental Monitoring Plan, Riverbend Landfill, Yamhill County, Oregon, prepared for Riverbend Landfill Company, Inc., McMinnville, Oregon, by Shaw Environmental, Inc., Portland, Oregon, December.

[2] SCS Engineers, 2012, Landfill Gas Monitoring Plan, Riverbend Landfill, Yamhill County, Oregon, prepared for Riverbend Landfill Company, Inc., McMinnville, Oregon, by SCS Engineers, Portland, Oregon, July.

# 2.0 GENERAL SITE INFORMATION

## 2.1 SITE DESCRIPTION AND HISTORY

RL is located at 13469 SW Highway 18 approximately three miles southwest of McMinnville, Oregon, in Yamhill County (see Figure B-1). The landfill property occupies an area of approximately 100 acres (see Figure B-2). The South Yamhill River borders the landfill on the south. Agricultural land and buildings surround the site on the north, west, and east. A recreation vehicle park is located between the south and north poplar tree farms west of the landfill. RL is owned and operated by RLC, a wholly owned subsidiary of Waste Management (WM), and is permitted by the DEQ to receive municipal solid waste and approved special waste.

The development of RL has generally progressed from west to east. The eight constructed landfill modules (Modules 1 through 8) cover approximately 85 acres (see Figure B-2).

## 2.2 STRUCTURES AND LAND USE

Four enclosed on-site structures (framed buildings with concrete foundations) are located in the northwest portion of the RL property (see Figure B-2): (1) the landfill office building, (2) the scale house, (3) the operations building, and (3) the LFGTEF. Also located in the northwest portion of the RL property is a maintenance shop which is an open-ended (on one side) fabric structure. There are no enclosed structures around RL's landfill modules, leachate collection and removal system risers control panels, or leachate secondary collection system risers control panels.

The surrounding land use near RL is as follows:

- **North**: The land to the north of the site consists of agricultural lands with a few, isolated, single-family residences.
- **West**: The site is bordered to the west by SW Highway 18. On the west side of SW Highway 18 are agricultural lands with a few, isolated, single-family residences.
- **South**: The site is bordered to the south by the South Yamhill River.
- **East**: The land to the east of the site consists of agricultural lands with a few, isolated, single-family residences.

## 2.3 CLIMATIC CONDITIONS

Located within the Willamette Valley west of the Cascade Mountains, the weather in the vicinity of RL is characterized by wet, mild winters and warm, dry summers. Mean monthly temperatures range from a low of 45°F in December and January to a high of 80°F in July and August. The Willamette Valley receives the majority of its precipitation during the winter months. The mean annual precipitation is approximately 42 inches per year, most of which occurs between November and April.

## 2.4 LANDFILL GAS COLLECTION AND CONTROL SYSTEM

RL has an active GCCS designed to manage LFG emissions while efficiently collecting methane for electrical energy generation by the LFGTEF. The GCCS includes horizontal and vertical gas wells, temporary and intermediate cover over parts of the landfill, the LFGTEF, and a flare. The flare has a 4,500-cubic-feet-per-minute rated capacity and is typically used to destroy excess LFG that is not able to be combusted by the LFGTEF. The flare also serves as a backup device in the event that one or more engines at the LFGTEF shut down.

The GCCS is designed to limit LFG migration and fugitive emissions. The following components comprise RL's GCCS (Figure B-2):

- Vertical gas wells.
- Horizontal gas wells.
- Condensate sumps.
- A LFGTE electrical generation plant with six 3516 Caterpillar Engines and a Perennial Energy, Inc. dual zone flare.

# 3.0 REGULATORY REQUIREMENTS

This section presents the regulatory requirements for monitoring LFG at the RL. The State of Oregon has adopted the EPA requirements, and as such, both sets of regulations are identical and only the state regulations are described below.

## 3.1 STATE REGULATIONS

Owners and operators of municipal solid waste landfills are required to implement a routine methane monitoring program, consistent with OAR 340-94-040(5) and 340-94-060(4) and the SWDP. A copy of the applicable state regulations (OAR 340-94-040(5) and 340-94-060(4) are included in Attachment A of this plan.

Section 16.7 of RL's SWDP requires that methane concentrations do not exceed:

A. 25 percent of the lower explosive limit (LEL) for methane (1.25 percent methane in air) in facility structures (excluding GCCS components). To demonstrate compliance with this requirement, RL has installed dedicated, continuous-monitoring methane detectors with audible and visual alarms in all the facility structures.

B. The LEL for methane (5 percent methane in air) at the facility property boundary. To demonstrate compliance with this requirement, RL has installed six compliance LFG monitoring probes (CGP-09R, CGP-10R, CGP-11, CGP-12, CGP-13, and CGP-14) near the facility property boundaries (see Figure B-2).

If methane is detected during a routine monitoring event above the specified limits listed in A and B above, Section 16.8 of RL's SWDP requires the owner to perform the following actions:

1. Immediately take all necessary steps to ensure protection of human health. These steps may include such actions as opening the doors and windows of a building to vent the structure or evacuating the area of the facility where the detection has occurred, if the detection occurred within a facility structure.

2. Within seven days of detection (unless the DEQ approves an alternative schedule), record the methane levels in RL's Operating Record along with a description of any steps taken to protect human health.

3. Within sixty days of detection, if elevated methane levels still persist, implement a remediation plan. Incorporate the remediation plan into the monitoring records, and notify the DEQ that the plan has been implemented.

Additional actions that will be implemented, either by RLC or a third party, in the event that routine monitoring detects methane at a concentration at or above 5 percent in a compliance probe are described in Section 5.1 of this plan.

# 4.0 LANDFILL GAS MONITORING PROGRAM

## 4.1 LANDFILL GAS MONITORING NETWORK

The LFG monitoring network consists of a series of LFG probes and monitored structures as described in the sections below. If the landfill expands or additional facility structures are added, additional LFG probes or structure monitoring locations will be added, as needed, in consultation with and approval by the DEQ.

The LFG probe locations are shown in Figure B-2, and construction details are summarized in Table B-1. Exploratory boring logs documenting subsurface soils encountered during drilling of the LFG probe borings, along with probe construction details, are included in Attachment B.

### 4.1.1 Compliance Boundary Landfill Gas Probes

Six compliance LFG probes (CGP-09R, CGP-10R, CGP-11, CGP-12, CGP-13, and CGP-14) are installed on or near the facility property boundary in the general direction of off-site structures to the north and east (see Figure B-2). These LFG probes define RL's compliance LFG probe monitoring network and are designed and located to monitor the migration of LFG in the subsurface soils at or near the site's property boundary. The compliance LFG probes are monitored at least quarterly.

Since the last DEQ-approved LFGMP was submitted in December 2007, three LFG probes (CGP-07R, PGP-08R, and CGP-10R) were installed to replace decommissioned, former probes GP-07, GP-08, and GP-10. Probe CGP-07R was also subsequently decommissioned to accommodate construction activities near the site entrance, and was replaced with compliance LFG probe CGP-14 in December 2013. Additionally, compliance LFG probe CGP-13 was installed in June 2013 approximately 200 feet north of existing performance LFG monitoring probe PGP-08R (located near the edge of Module 8B) to monitor subsurface gas concentrations further from the landfill footprint. The probe decommissioning, replacement and installation activities were all approved by the DEQ. For the purposes of this plan and as described in the following section, probe PGP-08R is being designated as a performance evaluation LFG probe due to its very close proximity to the facility waste modules.

### 4.1.2 Performance Evaluation Landfill Gas Probes

To supplement the six compliance LFG probes, RLC installed six performance LFG probes (PGP-01 [dual completion], PGP-02 [dual completion], PGP-03, PGP-04, PGP-06, and PGP-08R) designed to monitor the performance of the facility's GCCS. These performance probes are located adjacent to the facility waste cells (Modules 1, 2, 3, and 8) (see Figure B-2) and are not used for compliance LFG monitoring and reporting purposes. As approved by the DEQ, PGP-05 was decommissioned in June 2013 because of its location within the footprint of a mechanically stable earthen (MSE) berm to be constructed at RL.

### 4.1.3 Future Modifications to Landfill Gas Monitoring Network

Additional compliance LFG probes will be installed to accommodate future development of the landfill cells at RL, as necessary. The installation of future LFG probes will be in accordance with the

following: (1) OAR 690, Division 240; (2) the DEQ's Groundwater Monitoring Well Drilling, Construction and Decommissioning Guidance document dated August 1992; and (3) Sections 18.5 and 18.6 of RL's SWDP. RLC will notify the DEQ of any proposed changes to the LFG monitoring network. RLC will not decommission any LFG probe until a written request is submitted to and approved by the DEQ. The DEQ must approve any modification to the LFG monitoring network before it is implemented. Upon completing the modifications, all appropriate documentation, including the date the modification was made, a map showing the new probe location, and the probe construction detail, will be submitted to the DEQ and placed in the facility's operating record.

### 4.1.4 On-Site Structures

Five on-site structures are monitored:

- The office building.
- The scale house.
- The operations building.
- The maintenance shop.
- The LFGTEF building.

The RL on-site structures are manually monitored at least quarterly for LFG using a CES LandTec® GEM-2000 LFG Monitor (GEM-2000) or similar monitoring device.

The on-site structures are each equipped with dedicated, continuous-monitoring methane detectors with audible and visual alarms. These detectors are routinely calibrated, consistent with the manufacturer's recommendations, to ensure that the gas sensors and the alarms are operating properly.

## 4.2 LANDFILL GAS MONITORING AND PARAMETERS

### 4.2.1 General Monitoring Procedures

Standard monitoring procedures are outlined below in Sections 4.2.2 and 4.2.3 for the LFG probes and on-site structures. Monitoring locations, frequency, and testing parameters are summarized in Table B-2. All monitoring will be performed using appropriately-calibrated meters and the data will be stored in RL's landfill gas management system (LGMS) database.

### 4.2.2 Landfill Gas Probe Monitoring

The following procedures shall be used to monitor the compliance and performance LFG probes.

1. Record ambient weather conditions.

2. Calibrate the GEM-2000 (or similar device) at the start of the initial monitoring event according to the manufactures specifications and record the calibration information on a field form and/or save in RL LGMS database. Additionally, if a meter is rented from a third party vendor, provide a copy of calibration documentation from the rental company.

3. Connect the GEM-2000 tubing to the probe sample valve, open the sample valve, and record the initial static pressure of the probe.

4. Purge gas directly from the probe casing using the GEM-2000's internal pump for at least 90 seconds, unless water is observed in the probe casing. If water is observed in the probe casing, purge the probe casing for as long as possible until water is observed in the GEM-2000 tubing connected to the probe sample valve. Care should be taken to ensure that water does not enter the GEM-2000 as damage to the meter will occur.

5. Record the methane concentration when the readings have stabilized for one minute (i.e., methane concentrations have not changed more than 0.2 percent for one minute).

6. Notify the RL Site Manager immediately if the monitoring results at a compliance LFG probe indicate an exceedance of the regulatory limit (i.e., 5 percent) or if the result is approaching (i.e., 3 to 4 percent) the regulatory limit.

### 4.2.3 On-Site Structure Monitoring

In addition to the monitoring provided by the dedicated sensors in the on-site structures, quarterly monitoring will be performed to check for combustible gas accumulation within each structure. The following procedures will be used to perform methane monitoring in the onsite structures.

1. Record ambient conditions.

2. Calibrate the GEM-2000 (or similar device) at the start of the initial monitoring event according to the manufactures specifications and record the calibration information on a field form and/or save in RL LGMS database. Additionally, if a meter is rented from a third party vendor, provide a copy of calibration documentation from the rental company.

3. Measure percent methane in limited airflow areas of the structures (excluding confined spaces) where air movement may be restricted.

The continuous-monitoring methane detectors, installed in on-site structures, will be inspected quarterly and calibrated consistent with the manufacture's recommendations. If they are not functioning properly, site personnel should monitor methane concentrations, using a GEM-2000 or similar device, daily until the continuous-monitoring methane detector is repaired or replaced.

### 4.2.4 Barhole Probe Monitoring

This section describes the procedure for installing and monitoring temporary barhole probes in the event that additional monitoring of methane concentrations in the subsurface soils is required, as discussed in Section 5.1.2.

In general, temporary barholes will be installed by advancing a slide hammer and 3-foot soil core probe extension (or similar equipment) to a depth of 2.5 to 3.0 feet below ground surface. The soil core probe will be removed from the ground and a 3-foot polyvinyl chloride (PVC) pipe (temporary monitoring probe) will be inserted into the core hole. Soil will be packed around the barhole at the ground surface to create a surface seal. The PVC probe should be comprised of a bottom 1.5-foot section with 1/8-inch perforations, and equipped with a ball valve at the top to allow gas to accumulate within the barhole before the probe will be purged and methane concentrations recorded. After allowing gas to accumulate within the barhole for at least 10 minutes, the ball valve will be opened, the monitoring probe will be purged with the GEM-2000 and LFG concentrations will be recorded.

Similar to compliance and performance LFG probe monitoring, the following procedures will be followed when performing barhole probe monitoring:

1. Record ambient weather conditions.

2. Calibrate the GEM-2000 (or similar device) and record the calibration information on a field form and/or save in RL LGMS database. Additionally, if a meter is rented from a third party vendor, provide a copy of calibration documentation from the rental company.

3. Connect the GEM-2000 tubing to the barhole probe sample valve, open the sample valve, and record the initial static pressure of the probe.

4. Purge gas directly from the probe casing using the GEM-2000's internal pump for at least 90 seconds.

5. Record the methane concentration when readings have stabilized for one minute (i.e., methane concentrations have not changed more than 0.2 percent for one minute).

6. Notify the RF Site Manager immediately if the monitoring results at the barhole probe indicate an exceedance of the regulatory limit (i.e., 5 percent) or if the result is approaching (i.e., 3 to 4 percent) the regulatory limit.

# 5.0 RESPONSE ACTIONS AND REPORTING

## 5.1 FOLLOW-UP ACTIONS IN RESPONSE TO REGULATORY EXCEEDANCES

This section describes the required follow-up actions that will be performed if (1) the methane concentration in a facility structure is above regulatory limit of 1.25 percent, or (2) the methane concentration in a compliance LFG probe is above the regulatory limit of 5 percent.

### 5.1.1 On-Site Structures

The regulatory limit of methane within on-site structures is 1.25 percent by volume. If this concentration is exceeded during normal testing of areas within structures, RLC will immediately take all necessary steps to ensure protection of human health. After re-checking and confirming the concentration, immediate actions should include opening the doors and windows of a building to vent the structure or evacuating the area of the facility where the detection has occurred. Normally, the visual and audible alarms within the structures would be set to actuate at a lower concentration. Should these alarms also be actuated, the structure should be checked for sources of LFG migrating into the building.

RLC will perform follow-up monitoring of the facility structure within 24 hours of the initial exceedance and after venting of the structure has been completed. Unless the subsequent readings indicate levels above the regulatory limit (1.25 percent), the facility is still in compliance with the required regulations. If the follow-up monitoring indicates that the methane concentrations persist in the facility structure, then the requirements described in Section 3.1 of this plan must be followed.

### 5.1.2 LFG Compliance Probes

If routine monitoring detects methane at a concentration at or above 5 percent in a compliance probe, the following actions should be taken:

1. Notify the DEQ Solid Waste Coordinator for RL within 24 hours.

2. Perform follow-up monitoring of the compliance probe within 24 hours of the initial exceedance and during normal or typical weather conditions (e.g., generally stable barometric pressure conditions). If the 24-hour follow-up monitoring results indicate that the methane concentration in the compliance probe is below the regulatory limit of 5 percent then no further action is required at that time and RL can resume routine quarterly monitoring.

3. If the 24-hour follow-up monitoring results indicate that the methane concentration remains at or above 5 percent in a compliance probe located at the facility property boundary (CGP-10R and CGP-11), then the actions outlined in Section 3.1 of this plan must be followed.

4. If the 24-hour follow-up monitoring results indicate that the methane concentration remains at or above 5 percent in a compliance probe located inside the property boundary (CGP-09R, CGP-12, CGP-13, and CGP-14), the facility may still be in compliance. However, additional (barhole probe) monitoring should be performed to assess the extent of the LFG migration in the subsurface in the vicinity of the probe and to confirm methane concentration at the property boundary nearest the probe location is below the regulatory limit. Barhole probe monitoring should be performed, following the procedure described below, within 3 business days after the compliance probe exceedance is confirmed.

### 5.1.3 Barhole Probes

Barhole probes will be installed and monitored following the procedure previously described in Section 4.2.4. A minimum of one barhole probe should be installed and monitored within 5 feet of the compliance probe towards the facility property boundary to determine correlation between the compliance probe and the barhole probe. If the methane concentration in the initial barhole probe is below the regulatory limit, then no additional barhole probes are required. If the methane concentration in the initial barhole probe is above the regulatory limit, then additional barholes will be installed at intervals of approximately 25 feet from the compliance probe toward the facility property boundary. If barhole probe monitoring results shows methane levels above 5 percent at the facility boundary, then the requirements in Section 3.1 of this plan will be followed.

If barhole probe monitoring results are below the regulatory standard at the facility boundary, then monthly monitoring will be performed at the compliance probe that initially reported the exceedance and the barhole probe at the property boundary. If methane concentrations are below 5 percent at the compliance probe and barhole probe at the facility property boundary for 3 months, then the site will return to the routine quarterly monitoring frequency and discontinue the barhole probe monitoring.

The DEQ should be notified of the barhole probe monitoring results within 7 business days of completing the barhole probe monitoring.

## 5.2 REPORTING

The monitoring personnel will place a copy of the LFG monitoring data in RL's Operating Record, and the LFG monitoring activities and results will be included in RL's annual environmental monitoring report (AEMR) due to the DEQ by April 30 following the monitoring year.

One copy of the AEMR will be submitted to the following DEQ offices and personnel, unless requested otherwise in the future by the DEQ.

Mr. Bob Schwarz
Manager
Oregon Department of Environmental Quality
Eastern Region, Solid and Hazardous Waste Programs
400 East Scenic Drive, Suite 307
The Dalles, Oregon 97058
(541) 298-7255

Ms. Audrey Eldridge
Senior Hydrogeologist
Oregon Department of Environmental Quality
Western Region, Solid Waste Program
221 Stewart Avenue Suite 201
Medford, Oregon 97501
(541)776-6010

Ms. Holly Pence
Solid Waste Permit Coordinator
Oregon Department of Environmental Quality
Northwest Region, Solid Waste Program
2020 SW Fourth Avenue, Suite 400
Portland, OR 97201
(503) 229-5263

# TABLES

# Table B-1
# Landfill Gas Probe Monitoring Network Construction Information
# Riverbend Landfill

| Probe Designation | Lithologic Unit Screened | Date Installation Completed | Eastings[a] | Northings[a] | Ground Elevation[a] (ft-msl) | Top-of-Casing Elevation[a] (ft-msl) | Boring Depth (ft-bgs) | Boring Diameter (inches) | Probe Diameter (inches) | Screen Interval (ft-bgs) | Sand Pack Interval (ft-bgs) | Seal Interval (ft-bgs) |
|---|---|---|---|---|---|---|---|---|---|---|---|---|
| ***Performance Evaluation Landfill Gas Probes*** | | | | | | | | | | | | |
| PGP-01(shallow) | Silt/Clay | 21-May-93 | 5530.0 | 2053.6 | 125.9 | 127.27 | 22.0 | 8 | 0.5 | 3.5 to 4.5 | 2.6 to 5.0 | 0.0 to 2.6 |
| PGP-01 (deep) | Silt/Clay | 21-May-93 | 5530.0 | 2053.6 | 125.9 | 127.20 | 22.0 | 8 | 0.5 | 14.5 to 19.5 | 12.9 to 22.0 | 5.0 to 12.9 |
| PGP-02 (shallow) | Silt/Clay | 15-Jun-93 | 5469.2 | 1993.0 | 122.1 | 124.32 | 19.5 | 8 | 0.5 | 4.5 to 5.5 | 3.5 to 7.5 | 0.0 to 3.5 |
| PGP-02 (deep) | Silt/Clay | 15-Jun-93 | 5469.2 | 1993.0 | 122.1 | 124.25 | 19.5 | 8 | 0.5 | 12.5 to 17.5 | 10.5 to 19.5 | 7.5 to 10.5 |
| PGP-03 | Silt/Clay, Clayey/Sand | 15-Dec-93 | 5070.0 | 2011.4 | 125.4 | 127.60 | 17.2 | 8 | 0.5 | 4.0 to 13.3 | 3.0 to 16.1 | 0.5 to 3.0 |
| PGP-04 | Silt/Clay | 15-Dec-93 | 4670.6 | 2340.3 | 130.5 | 132.95 | 22.0 | 8 | 0.5 | 8.0 to 17.3 | 6.0 to 19.3 | 0.5 to 6.0 |
| PGP-06 | Silt/Clay | 16-Dec-93 | 3916.2 | 3112.8 | 148.9 | 151.03 | 19.5 | 8 | 0.5 | 7.0 to 16.3 | 4.8 to 17.3 | 0.5 to 4.8 |
| PGP-08R | Silt/Clay | 29-Sep-08 | 5036.5 | 3993.6 | 150.7 | 152.52 | 18.0 | 8.25 | 1.0 | 5.0 10 16.9 | 4.0 to 18.0 | 1.0 to 4.0 |
| ***Compliance Landfill Gas Probes*** | | | | | | | | | | | | |
| CGP-10R | Silt/Clay | 28-Sep-09 | 6752.4 | 3639.3 | 125.7 | 129.10 | 16.0 | 8.25 | 1.0 | 4.7 to 14.8 | 4.0 to 16.0 | 1.0 to 4.0 |
| CGP-11 | Silt/Clay | 17-Dec-93 | 6983.2 | 3112.5 | 121.6 | 124.08 | 19.0 | 8 | 0.5 | 6.5 to 15.8 | 6.0 to 18.2 | 0.5 to 6.0 |
| CGP-12 | Silt/Clay | 16-Dec-93 | 6227.4 | 2570.8 | 127.0 | 128.99 | 20.0 | 8 | 0.5 | 7.0 to 16.3 | 4.6 to 19.1 | 0.5 to 4.6 |
| CGP-13 | Silt/Clay | 26-Jun-13 | 5071.3 | 4187.4 | 141.8 | 143.91 | 12.5 | 8 | 1.0 | 5.0 to 12.0 | 4.0 to 12.5 | 1.0 to 4.0 |
| CGP-14 | Silt/Clay | 12-Dec-13 | 4197.2 | 4409.3 | 149.5 | 152.42 | 13.3 | 8 | 1.0 | 5.5 to 12.5 | 4.5 to 13.3 | 1.5 to 4.5 |

NOTE:

ft-msl = feet-mean sea level; ft-bgs = feet below ground surface.

[a] All complinace and performance evaluation landfill gas probes were re-surveyed in July 2013 (excluding CGP-14).

# Table B-2
# Landfill Gas Monitoring
# Schedule and Parameters
# Riverbend Landfill

| Monitoring Location | Monitoring Frequency | | | | Parameters |
|---|---|---|---|---|---|
| | 1st Quarter, Winter Jan. 1 to Mar. 31 | 2nd Quarter, Spring Apr. 1 ro Jun. 30 | 3rd Quarter, Summer Jul. 1 to Sep. 30 | 4th Quarter, Fall Oct. 1 to Dec. 31 | Methane |
| ***Performance Evaluation Landfill Gas Probes*** | | | | | |
| PGP-01(shallow) | X | X | X | X | X |
| PGP-01 (deep) | X | X | X | X | X |
| PGP-02 (shallow) | X | X | X | X | X |
| PGP-02 (deep) | X | X | X | X | X |
| PGP-03 | X | X | X | X | X |
| PGP-04 | X | X | X | X | X |
| PGP-06 | X | X | X | X | X |
| PGP-08R | X | X | X | X | X |
| ***Compliance Landfill Gas Probes*** | | | | | |
| CGP-09R | X | X | X | X | X |
| CGP-10R | X | X | X | X | X |
| CGP-11 | X | X | X | X | X |
| CGP-12 | X | X | X | X | X |
| CGP-13 | X | X | X | X | X |
| CGP-14 | X | X | X | X | X |
| ***Other Monitoring Locations*** | | | | | |
| Facility Structures | X | X | X | X | X |

# FIGURES

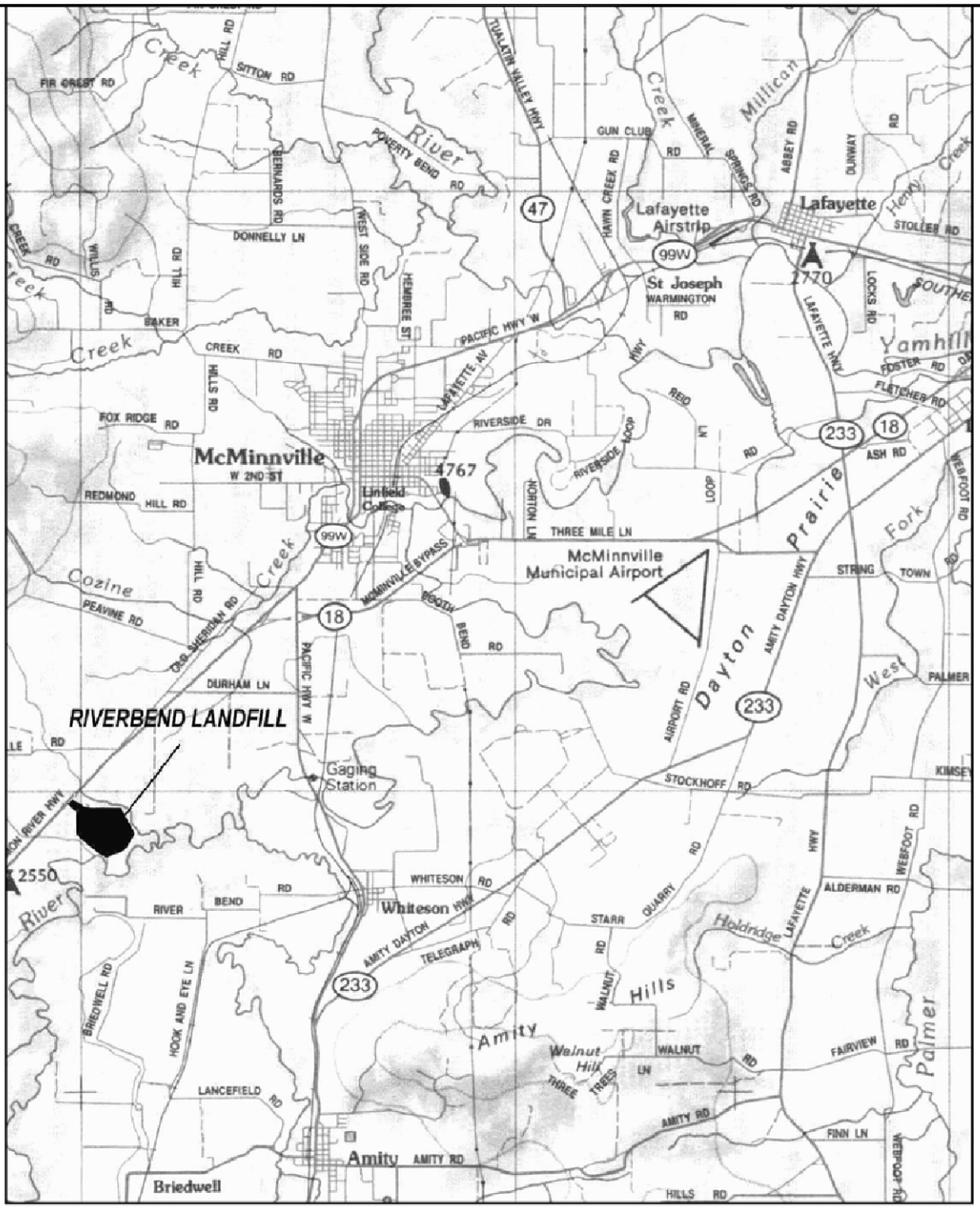


Basemap from Oregon Atlas and Gazetteer (DeLorme)

0 1 2
MILES

OREGON

WASTE MANAGEMENT


SCS ENGINEERS
Environmental Consultants and Contractors
14945 SW Sequoia Parkway, Suite 180
Portland, Oregon 97224
(503) 639-9201 FAX: (503) 684-6948


| PROJECT NO. | DES BY |
|---|---|
| 04208022.14 | D.L. |
| SCALE | CHK BY |
| AS SHOWN | D.L. |
| CAD FILE | APP BY |
| FIGURE B-1 | L.C. |

SITE LOCATION MAP
LANDFILL GAS MONITORING PLAN

RIVERBEND LANDFILL
McMINNVILLE, OREGON

DATE
DECEMBER 2014

FIGURE
B-1

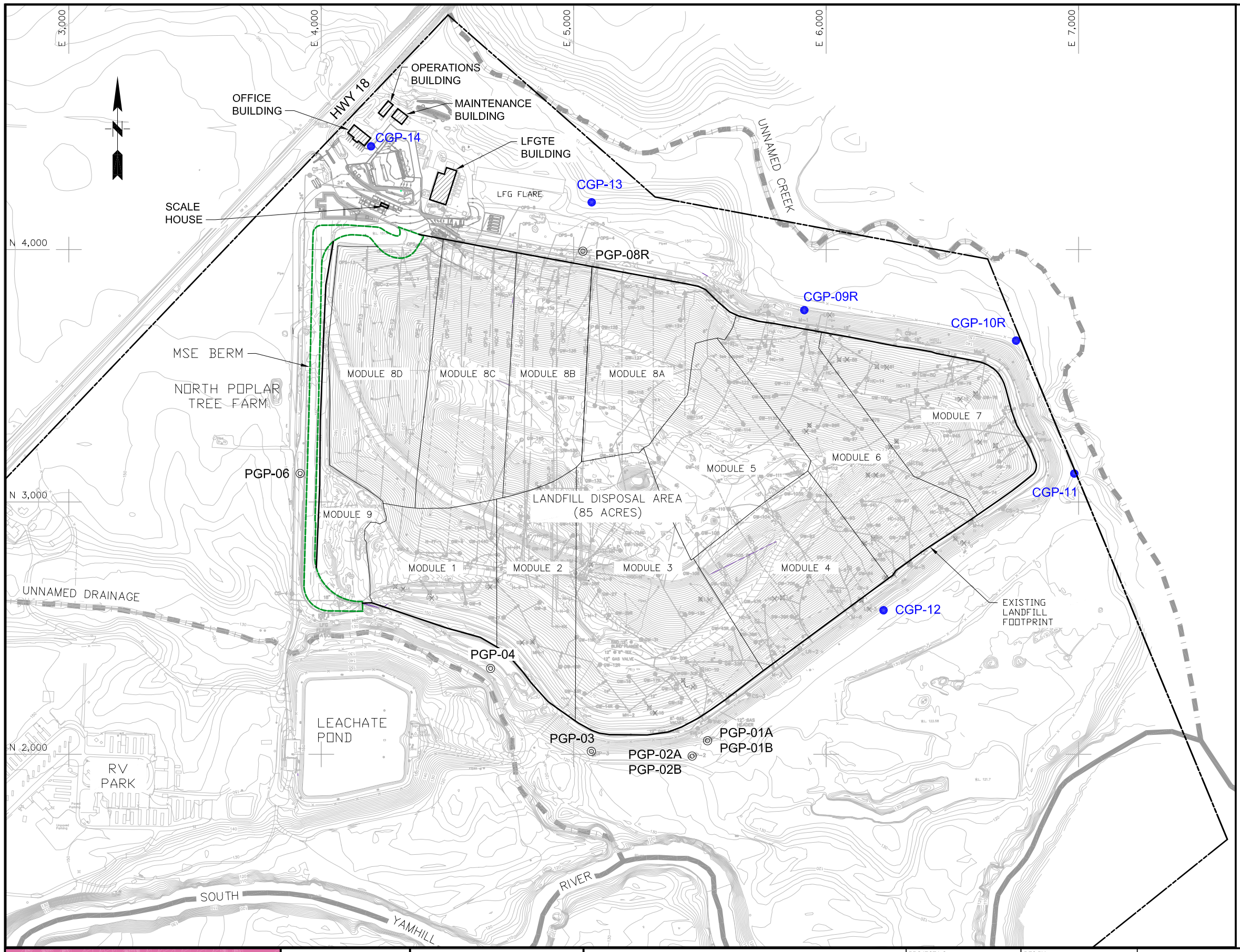


LEGEND:

- Topographic Contours (Surveyed)
- Topographic Contours (USGS)
- Property Boundary
- Waste Module Boundary Line
- Flow Line - Yamhill River
- Flow Line - Tributary Stream
- CGP-12 ● Compliance Landfill Gas Monitoring Probe
- PGP-06 ◎ Performance Evaluation Landfill Gas Monitoring Probe

SOURCE:

1) Existing contours based on aerial topography provided by Miller Creek Aerial Mapping, date of photograph March 22, 2014. Contours are based on NAVD 88.
2) Horizontal Datum: Assumed
   Iron pipe at scale house = N4000.000 E4000.000
   Iron pipe at maintenance building = N2825.685 E4000.000

NOTES:

1) Phase IA of the mechanically stabilized earthen (MSE) berm (approximate southern half) is completed. Phase IB of the MSE berm (approximate northern half) is currently under construction.

SCS ENGINEERS
Environmental Consultants and Contractors
14945 SW Sequoia Parkway, Suite 180
Portland, Oregon 97224
(503) 639-9201 FAX: (503) 684-6948

WASTE MANAGEMENT

0 400 800
SCALE IN FEET

| | |
|---|---|
| PROJECT NO. 04208022.14 | DES BY D.L. |
| SCALE AS SHOWN | CHK BY D.L. |
| CAD FILE FIGURE B-2 | APP BY L.C. |

MONITORING LOCATIONS
LANDFILL GAS MONITORING PLAN

RIVERBEND LANDFILL
McMINNVILLE, OREGON

DATE DECEMBER 2014

FIGURE B-2

# ATTACHMENT A

## Applicable Landfill Gas Regulations

# 40 CFR, Part 258, Section 258.23 EXPLOSIVE GASES CONTROL

Performance Standard:

258.23(a) Owners or operators of all MSWLF units must ensure that:

258.23(a)(1) The concentration of methane gas generated by the facility does not exceed 25 percent of the lower explosive limit for methane in facility structures (excluding gas control or recovery system components); and

258.23(a)(2) The concentration of methane gas does not exceed the lower explosive limit for methane at the facility property boundary.

258.23(b) Owners or operators of all MSWLF units must implement a routine methane monitoring program to ensure that the standards of paragraph (a) of this section are met.

258.23(b)(1) The type and frequency of monitoring must be determined based on the following factors:

258.23(b)(1)(i) Soil conditions;

258.23(b)(1)(ii) The hydrogeologic conditions surrounding the facility;

258.23(b)(1)(iii) The hydraulic conditions surrounding the facility; and

258.23(b)(1)(iv) The location of facility structures and property boundaries.

258.23(b)(2) The minimum frequency of monitoring shall be quarterly.

258.23(c) If methane gas levels exceeding the limits specified in paragraph (a) of this section are detected, the owner or operator must:

258.23(c)(1) Immediately take all necessary steps to ensure protection of human health and notify the State Director;

258.23(c)(2) Within seven days of detection, place in the operating record the methane gas levels detected and a description of the steps taken to protect human health; and

258.23(c)(3) Within 60 days of detection, implement a remediation plan for the methane gas releases, place a copy of the plan in the operating record, and notify the State Director that the plan has been implemented. The plan shall describe the nature and extent of the problem and the proposed remedy.

Waiver:

258.23(c)(4) The Director of an Approved State may establish alternative schedules for demonstrating compliance with paragraphs (c)(2) and (3) of this section.

Definitions:

258.23(d) For purposes of this section, "lower explosive limit" means the lowest percent by volume of a mixture of explosive gases in air that will propagate a flame at 25 deg. C and atmospheric pressure.

**340-094-0040**

**Operating Criteria**

(1) If a municipal solid waste landfill is subject to **40 CFR, Part 258** as provided in **40 CFR, §258.1,** the owner or operator shall comply with landfill operating criteria in **40 CFR, Part 258, Subpart C**. Except as otherwise provided in OAR Chapter 340, Division 94, any person who maintains or operates any municipal solid waste landfill must do so in conformance with the operating requirements of this rule.

(2) Open Burning. No person shall conduct the open burning of solid waste at a landfill. The Department may authorize the infrequent burning of land-clearing debris such as tree stumps and limbs, brush and other wood waste, except that open burning of industrial wood waste is prohibited.

(3) Surface Water:

(a) No person shall cause a discharge of pollutants from a landfill into public waters including wetlands, in violation of any applicable state or federal water quality rules or regulations;

(b) Each landfill permittee shall ensure that surface runoff and leachate seeps are controlled so as to minimize discharges of pollutants into public waters.

(4) Surface Drainage Control. Each permittee shall ensure that:

(a) The landfill is maintained so that drainage will be diverted around or away from active and completed operational areas;

(b) The surface contours of the landfill are maintained such that ponding of surface water is minimized.

(5) Gas Control:

(a) No person shall operate or maintain a landfill except in conformance with the provisions for gas control in OAR 340-094-0060 (4);

(b) Monitoring:

(A) Where the Department finds that a landfill's location and geophysical condition indicate that there is a reasonable probability of potential adverse effects on public health or the environment, the Department may require a permittee to provide monitoring wells to determine the effects of the landfill on the concentration of methane gas in the soil;

(B) In addition to the requirements of **40 CFR, §258.23**, if the Department determines that monitoring wells are required at a landfill, the permittee shall provide and maintain the wells at the locations specified by the Department and shall submit a copy of the geologic log and record of well construction to the Department within 30 days of completion of construction;

(C) In addition to the requirements of **40 CFR, §258.23**, where the Department determines that self-monitoring is practicable, the Department may require that the permittee collect and analyze samples of gas, at intervals specified and in a manner approved by the Department, and submit the results in a format and within a time frame specified by the Department;

(D) In addition to the requirements of **40 CFR, §258.23**, the Department may require permittees who do self-monitoring to periodically split samples with the Department for the purpose of quality control.

**340-094-0060**

**Design Criteria**

(1) If a municipal solid waste landfill is subject to **40 CFR, Part 258** as provided in **40 CFR, §258.1**, the owner or operator shall comply with landfill design criteria in **40 CFR, Part 258, Subpart D**. Except as otherwise provided in OAR Chapter 340, Division 94, any person who designs, constructs, expands or modifies any municipal solid waste landfill must do so in conformance with the design requirements of this rule.

(2) Plan Design Requirements. In addition to the require-ments of **40 CFR, Part 258, Subpart D**, unless an exemption has been granted under OAR 340-093-0070(4), and in addition to the requirements of OAR 340-093-0070, detailed plans and specifications for landfills shall include but not be limited to:

(a) Topographic maps which show natural features of the site; the location and design of all pertinent existing and proposed structures, such as berms, dikes, surface drainage control devices, access and on-site roads, water and waste water facilities, gas control devices, monitoring wells, fences, utilities, maintenance facilities, shelter and buildings; legal boundaries and property lines, and existing contours and projected finish grades. Unless otherwise approved by the Department, the scale of the plan drawings shall be no greater than one inch equals 200 feet, with contour intervals not to exceed five feet. Horizontal and vertical controls shall be established and tied to an established bench mark located on or near the site. Where the Department deems it essential to ensure compliance with OAR Chapter 340, Divisions 93 through 96, the bench mark shall be referenced to the Oregon State Plane Coordinate System, Lambert Projection;

(b) A minimum of two perpendicular cross section drawings through the landfill. Each cross section shall illustrate existing grade, excavation grade, proposed final grade, any additions for groundwater protection, water table profile and soil profile. Additional cross sections shall be provided as necessary to adequately depict underlying soils, geology and landfill contours, and to display the design of environmental protection devices or structures;

(c) A description of the design assumptions and methods used to forecast flows and to determine the sizing of pumps, pipes, ditches, culverts and other hydraulic equipment used for the collection, treatment and disposal of leachate and for the control of surface drainage;

(d) A detailed operations plan pursuant to OAR 340-094-0040(11)(b) and timetable which describes the proposed method of operation and progressive development of trenches and/or landfill lifts or cells.

(3) Leachate. In addition to the requirements of **40 CFR, Part 258, Subpart D**, any person designing or constructing a landfill shall ensure that leachate production is minimized. Where required by the Department, leachate shall be collected and treated or otherwise controlled in a manner approved by the Department. Leachate storage and treatment impoundments shall be located, designed, constructed and monitored, at a minimum, to the same standards of environmental protection as municipal solid waste landfills.

(4) Gas Control. No person shall establish, expand or modify a landfill such that:

(a) The concentration of methane ($CH_4$) gas at the landfill exceeds 25 percent of its lower explosive limit in facility structures (excluding gas control or gas recovery system components) or its lower explosive limit at the property boundary;

(b) Malodorous decomposition gases become a public nuisance.

# ATTACHMENT B

## Landfill Gas Probe Boring Logs and Construction Details

# LOG OF EXPLORATORY BORING

| | | | |
|---|---|---|---|
| PROJECT NAME | Remedial Investigation | BORING NO. | GP-01 |
| LOCATION | Riverbend Landfill; McMinnville, Oregon | PAGE | 1 OF 2 |
| DRILLED BY | GeoTech Explorations | GROUND ELEV. | 124.50' |
| DRILL METHOD | Hollow Stem Auger | TOTAL DEPTH | 22.00' |
| LOGGED BY | Craig D. Fanshier | DATE COMPLETED | 05/20/93 |

| RECOVERY PERCENT | POCKET PENETRO-METER (Tons/SF) | PENETRATION (Blows/Ft) | GROUND WATER LEVELS | DEPTH IN FEET | SAMPLES | WELL DETAILS | LITHOLOGIC COLUMN | LITHOLOGIC DESCRIPTION |
|---|---|---|---|---|---|---|---|---|

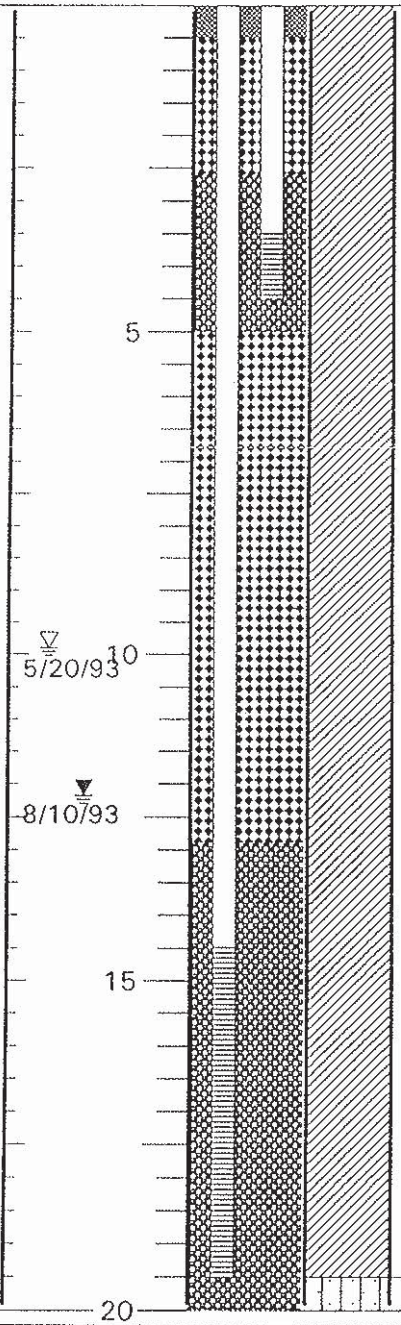


**0 to 19.5 feet:** SILTY CLAY (CL), dark yellowish brown (10YR 4/4), 20-30% dark grayish brown (10YR 3/3) evenly distributed mottling; medium plasticity fines; 5% very fine rootlets; granular to block soil peds; firm to stiff; damp; slight methane odor.

@ 3.5 feet: wet along soil peds (wetting front?).

@ 7.0 feet: some macropores.

@ 8.9 feet: soil peds surfaces are wet.

@ 13.0 feet: 5-15% rust reddish mottling, 5% gray mottling; peds are poorly developed.

@ 18.5 feet: 10-40% fine sand lenses, 2 to 4-inches thick.

**19.5 to 22.0 feet:** SANDY SILT (SM), continues.

## REMARKS

Drilled w/8" OD (4.25" ID) HSA. GP-01 was drilled approximately 5.0 feet north of TB-13. This borehole was not continuously sampled. A 1/2"-PVC multiple depth gas probe was constructed in the borehole. Well construction information presented in Well Details. See explanation for definition of symbols.

# LOG OF EXPLORATORY BORING

| | | | |
|---|---|---|---|
| PROJECT NAME | Remedial Investigation | BORING NO. | GP-01 |
| LOCATION | Riverbend Landfill; McMinnville, Oregon | PAGE | 2 OF 2 |
| DRILLED BY | GeoTech Explorations | GROUND ELEV. | 124.50' |
| DRILL METHOD | Hollow Stem Auger | TOTAL DEPTH | 22.00' |
| LOGGED BY | Craig D. Fanshier | DATE COMPLETED | 05/20/93 |

| RECOVERY PERCENT | POCKET PENETRO-METER (Tons/SF) | PENETRATION (Blows/Ft) | GROUND WATER LEVELS | DEPTH IN FEET | SAMPLES | WELL DETAILS | LITHOLOGIC COLUMN | LITHOLOGIC DESCRIPTION |
|---|---|---|---|---|---|---|---|---|
| | | | | | | | | **19.5 to 22.0 feet: SANDY SILT (SM)**, brown (7.5YR 4/3); 70% low plasticity fines; 30% fine sand; soft; wet. |
| | | | | | | | | BORING TERMINATED AT 24.5 FEET. |
| | | | | 25 | | | | |
| | | | | 30 | | | | |
| | | | | 35 | | | | |
| | | | | 40 | | | | |

## REMARKS

Drilled w/8" OD (4.25" ID) HSA. GP-01 was drilled approximately 5.0 feet north of TB-13. This borehole was not continuously sampled. A 1/2"-PVC multiple depth gas probe was constructed in the borehole. Well construction information presented in Well Details. See explanation for definition of symbols.

# SOIL GAS PROBE CONSTRUCTION DETAILS

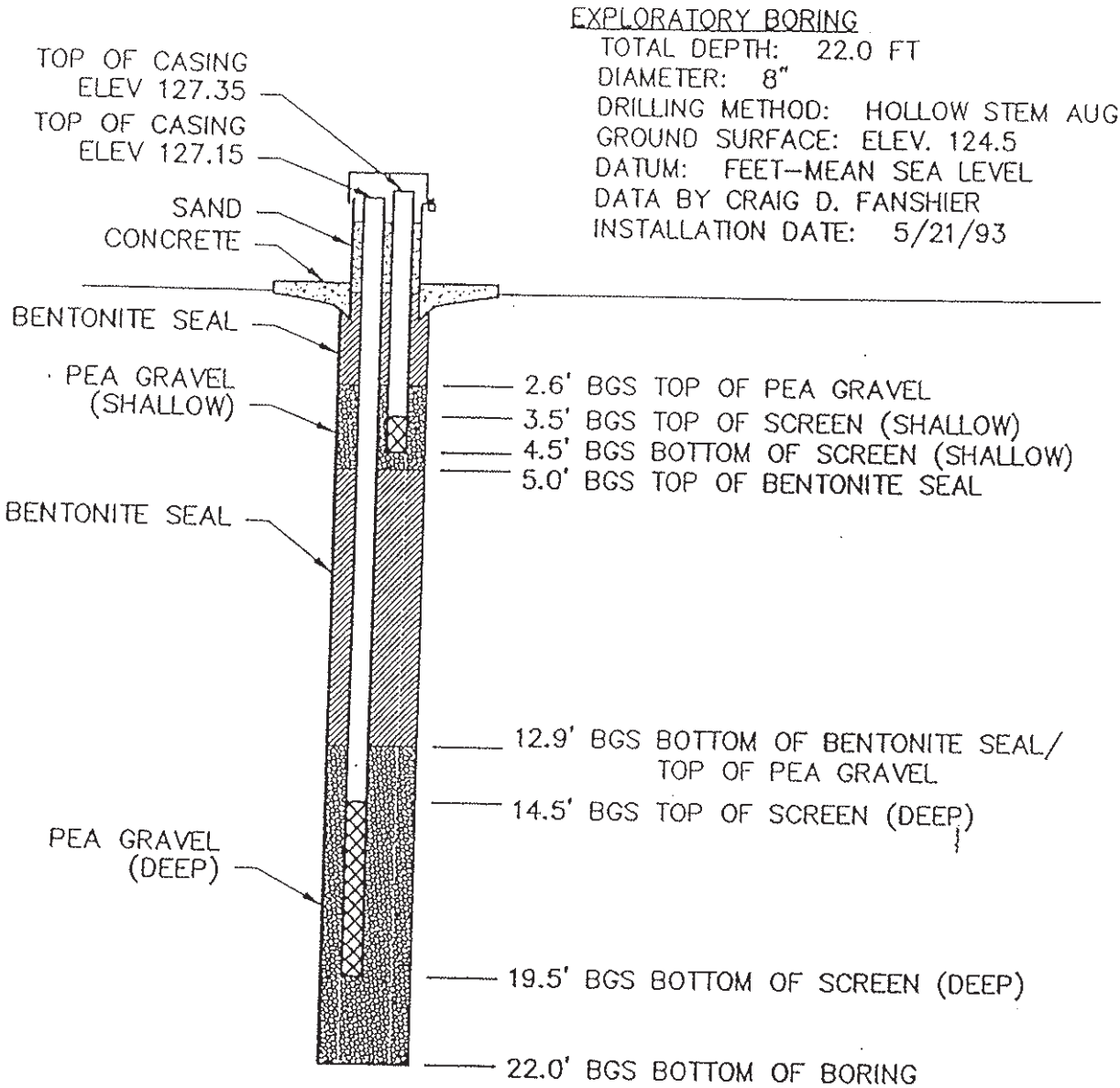


NOTE: SOIL GAS PROBE CASING AND SCREEN ARE CONSTRUCTED USING 1/2–INCH (ID) SCHEDULE 80 PVC. PERFORATIONS ARE APPROXIMATELY 0.03–INCHES, FIELD SLOTTED USING A HACK SAW.

EMCON Northwest, Inc.

DATE 9/93
DWN. JTB
APPR.
REVIS.
PROJECT NO. 0258001.24

Figure B-1
RIVERBEND LANDFILL
REMEDIAL INVESTIGATION
McMINNVILLE, OREGON
BORING GP-01

G:\DWG\0258\001\24GASP-9/7/93-J

# LOG OF EXPLORATORY BORING

| | | | |
|---|---|---|---|
| PROJECT NAME | Remedial Investigation | BORING NO. | GP-02 |
| LOCATION | Riverbend Landfill; McMinnville, Oregon | PAGE | 1 OF 1 |
| DRILLED BY | GeoTech Explorations | GROUND ELEV. | 121.30' |
| DRILL METHOD | Hollow Stem Auger | TOTAL DEPTH | 19.50' |
| LOGGED BY | Craig D. Fanshier | DATE COMPLETED | 06/14/93 |

| RECOVERY PERCENT | POCKET PENETRO-METER (Tons/SF) | PENETRATION (Blows/Ft) | GROUND WATER LEVELS | DEPTH IN FEET | SAMPLES | WELL DETAILS | LITHOLOGIC COLUMN | LITHOLOGIC DESCRIPTION |
|---|---|---|---|---|---|---|---|---|

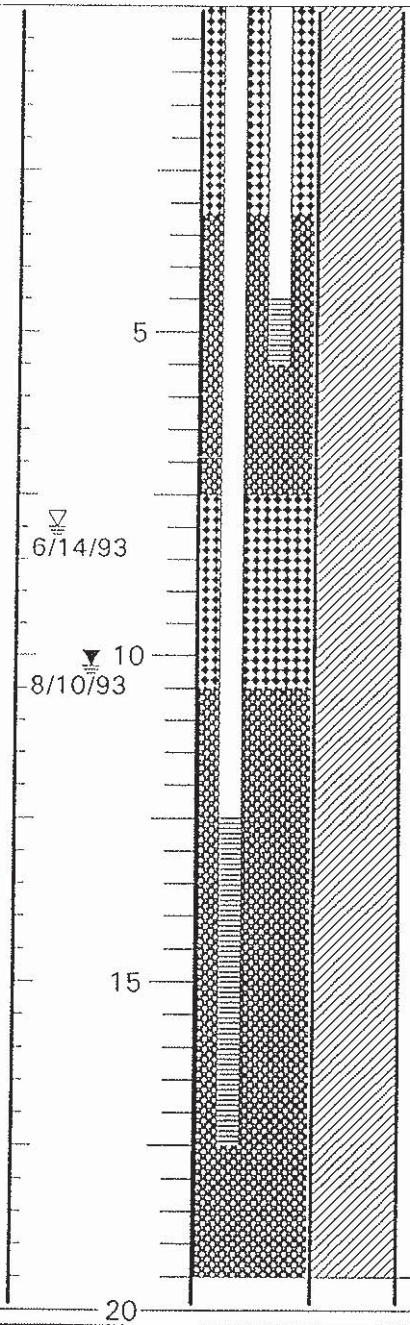


0 to 19.5 feet: SILTY CLAY (CL), dark brown; medium plasticity fines; very stiff, damp.

@ 3.4 to 3.7 feet: brown and black organic rich horizon.

@ 3.7 feet: color change to a gray with reddish brown mottling.

@ 6.0 feet: moderately developed granular soil peds.

@ 8.0 feet: 50% brown mottling; moist to wet, water along ped surfaces; some macropores.

@ 9.5 feet: 30% brown mottling; some larger macropores.

@ 17.0 to 19.0 feet: soft to firm.

BORING TERMINATED AT 19.5 FEET.

## REMARKS

Drilled w/8" OD (4.25" ID) HSA. Samples continuously collected w/5'-long, 3" ID split barrel and 1.5'-long, 3" OD split spoon fitted w/rings. A 1/2"-PVC multiple depth gas probe was constructed in the borehole. Well construction information presented in Well Details. See explanation for definition of symbols.

# SOIL GAS PROBE CONSTRUCTION DETAILS

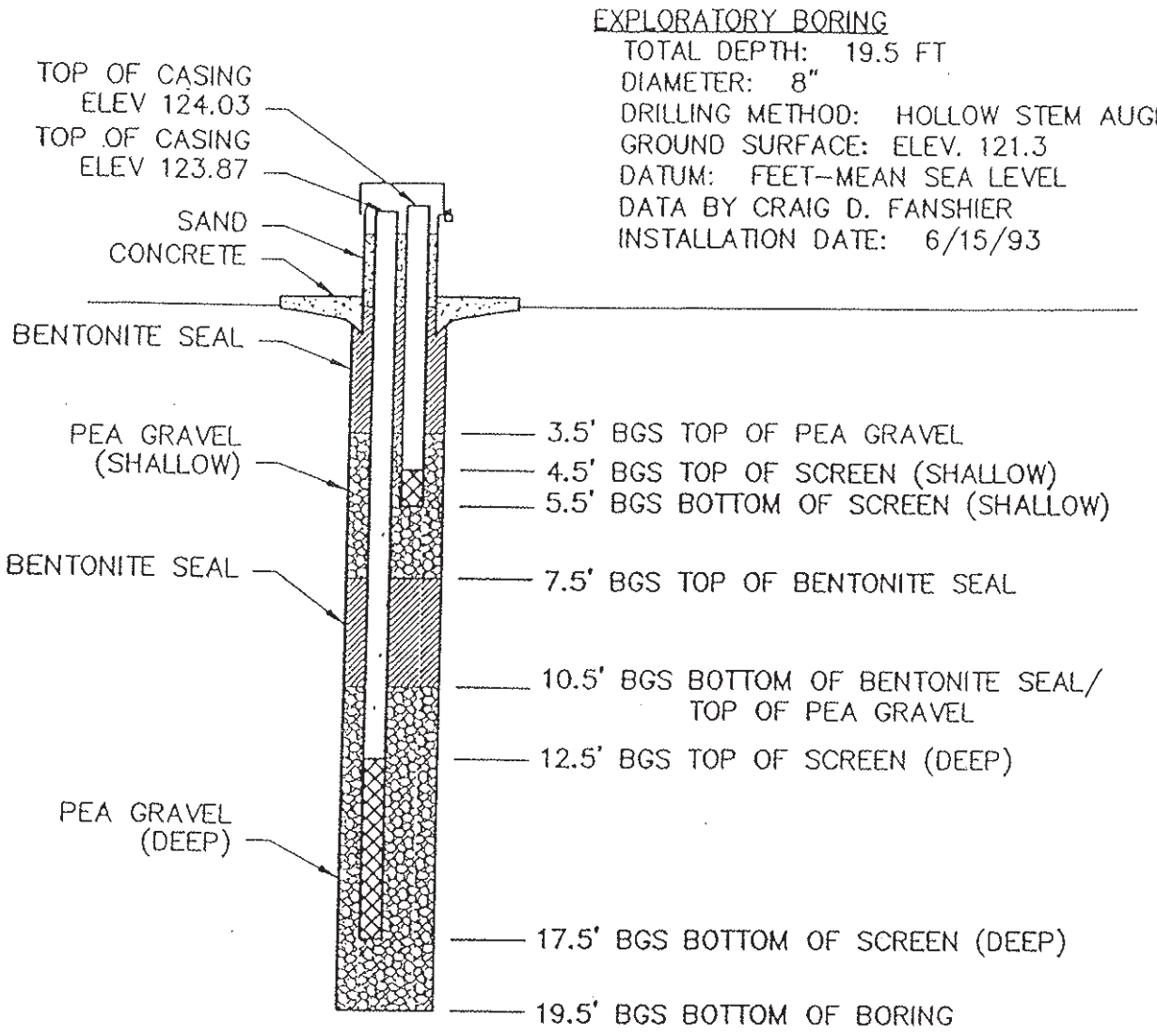


NOTE: SOIL GAS PROBE CASING AND SCREEN ARE CONSTRUCTED USING 1/2–INCH (ID) SCHEDULE 80 PVC. PERFORATIONS ARE APPROXIMATELY 0.03–INCHES, FIELD SLOTTED USING A HACK SAW.

EMCON Northwest, Inc.

DATE 9/93
DWN. JTB
APPR.
REVIS.
PROJECT NO. 0258001.24

Figure B-2
RIVERBEND LANDFILL
REMEDIAL INVESTIGATION
McMINNVILLE, OREGON
BORING GP-02

G:\DWG\0258\001\24GASPA–9/7/93–J

# LOG OF EXPLORATORY BORING

| | | | |
|---|---|---|---|
| PROJECT NAME | Gas Collection System | BORING NO. | GP-03 |
| LOCATION | Riverbend Landfill; McMinnville, Oregon | PAGE | 1 OF 1 |
| DRILLED BY | Geo-Tech Explorations, Inc. | GROUND ELEV. | 125.40' |
| DRILL METHOD | Hollow Stem Auger | TOTAL DEPTH | 17.20' |
| LOGGED BY | Craig D. Fanshier | DATE COMPLETED | 12/15/93 |

| RECOVERY PERCENT | POCKET PENETROMETER (Tons/SF) | PENETRATION (Blows/Ft) | GROUND WATER LEVELS | DEPTH IN FEET | SAMPLES | LITHOLOGIC COLUMN | WELL DETAILS | LITHOLOGIC DESCRIPTION |
|---|---|---|---|---|---|---|---|---|
| 100 | | | | | | | | **0 to 10.0 feet: SILTY CLAY (CL)**, brown (7.5 YR 4/3), some gray mottling 0 to 2.0 feet; medium plasticity fines; stiff to very stiff; damp. |
| 100 | 2.5 | | | | | | | @ 4.0 to 10.0 feet: evenly colored; some large 1/8-inch diameter macro pores with gray rinds, some small 1/16- to 1/32-inch macro pores approximately 1 to 2 square inch. |
| 76 | 3.0 | | | 5 | | | | |
| | 2.0 | | | | | | | |
| | 2.0 | | | | | | | |
| | 1.5 | | | | | | | @ 9.0 feet: wet; soil ped sutures are slick and glisten. |
| | | | 1/5/94 ▽ 12/15/93 | 10 | | | | **10.0 to 17.2 feet: CLAYEY SAND (SC)**, dark brown (7.5 YR 3/3); 30 to 40 percent medium plasticity fines; 60 to 70 percent fine, moderately sorted sand; no to very few macro pores; appears loose; wet. |
| 100 | | | | | | | | @ 14.0 to 17.0 feet: SAND, grades to a medium sand (approximate fine to medium is 1:1), subangular, moderately sorted, mixted lithologies (quartz, plasioclase, and rock fragments), some large 1/8 to 1/16-inch macro pores with gray rinds, open, vertical and horizontal, mostly uniform. |
| | | | | 15 | | | | BORING TERMINATED AT 17.2 FEET. |
| | | | | 20 | | | | |

REMARKS

**EMCON NORTHWEST**

# WELL DETAILS

CLIENT Riverbend Landfill Company, Inc.
PROJECT NUMBER 0258-001.25
PROJECT NAME Gas Collection System
LOCATION McMinnville, Oregon
WELL PERMIT NO. N.A.

BORING / WELL NO. GP-03
TOP OF CASING ELEV. 127.42
GROUND SURFACE ELEV. 125.4
DATUM Feet-Mean Sea Level
INSTALLATION DATE 12/15/93

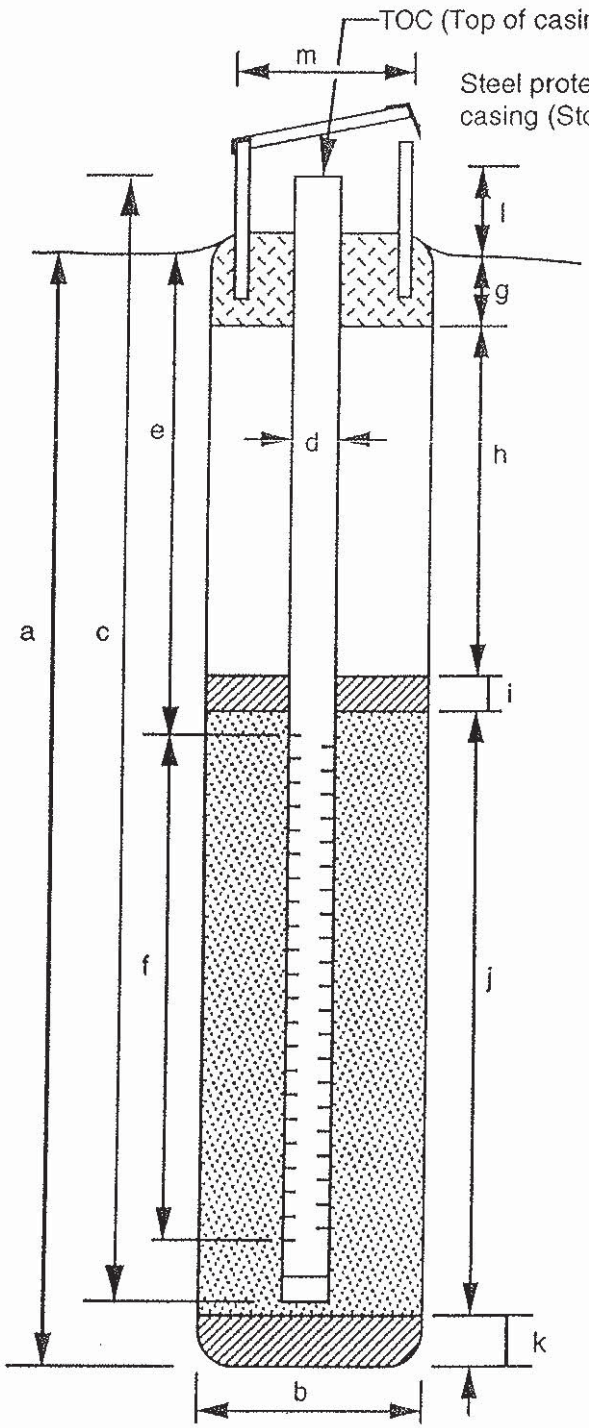


## EXPLORATORY BORING

a. Total depth 17.2 ft.
b. Diameter 8 in.
Drilling method Hollow Stem Auger

## WELL CONSTRUCTION

c. Total casing length 16.4 ft.
Material Schedule 80 PVC
d. Diameter 0.5 in.
e. Depth to top perforations 4.0 ft.
f. Perforated length 9.3 ft.
Perforated interval from 4.0 to 13.3 ft.
Perforation type Machine Slotted
Perforation size 0.030 Inches
g. Surface seal (0 to 0.5) 0.5 ft.
Material Concrete
h. Backfill N.A. ft.
Material N.A.
i. Seal (0.5 to 3.0) 2.5 ft.
Material Bentonite
j. Gravel pack 13.1 ft.
Gravel pack interval from 3.0 to 16.1 ft.
Material 3/8-Inch Gravel
k. Bottom seal/fill N.A. ft.
Material N.A
l. Casing stickup 2.4 ft.
m. Protective casing diameter 6.5 In.

Prepared by: Craig Fanshier

Ventura Mac 4 Rev. 7/23/91

# LOG OF EXPLORATORY BORING

| | | | |
|---|---|---|---|
| PROJECT NAME | Gas Collection System | BORING NO. | GP-04 |
| LOCATION | Riverbend Landfill; McMinnville, Oregon | PAGE | 1 OF 1 |
| DRILLED BY | Geo-Tech Explorations, Inc. | GROUND ELEV. | 130.50' |
| DRILL METHOD | Hollow Stem Auger | TOTAL DEPTH | 20.00' |
| LOGGED BY | Craig D. Fanshier | DATE COMPLETED | 12/15/93 |

| RECOVERY PERCENT | POCKET PENETROMETER (Tons/SF) | PENETRATION (Blows/Ft) | GROUND WATER LEVELS | DEPTH IN FEET | SAMPLES | LITHOLOGIC COLUMN | WELL DETAILS | LITHOLOGIC DESCRIPTION |
|---|---|---|---|---|---|---|---|---|
| 56 | 2.0 | | | | | | | **0 to 11.0 feet: CLAYEY SILT (ML)**, brown (10YR 4/3); low plasticity fines, micaceous; trace fine sand; few small macro pores, very stiff; damp. |
| | 2.5 | | | | | | | |
| 96 | | | | 5 | | | | @ 6.5 feet: color changes to dark greenish gray (5GY 4/1) with 5 percent light brown mottling (approximately 1.5-inch diameter mottles). |
| | 4.5 | | | | | | | @ 9.0 feet: color changes to very dark gray (N 3/); some brown roots and wood fragments (approximately 5 percent at 9.0 to 10.0 feet), some few small macro pores. |
| | 4.0 | | | | | | | |
| 100 | 2.5 | | | 10 | | | | |
| | 2.5 | | ▼ 1/5/94 | | | | | **11.0 to 20.0 feet: SILTY CLAY (CL)**, very dark gray (N 3/) with approximately 50 percent reddish brown mottling; medium plasticity fines; abundant macro pores (1/16-inch to 1/8-inch diameter, approximately 5 per square inch, small to medium; very stiff, damp to moist. |
| | 2.5 | | | | | | | |
| | 2.0 | | | | | | | @ 12.0 to 14.0 feet: soil ped surfaces are glazed/glisten, smooth. Moist at 12.0 feet. |
| | 2.0 | | ▽ 12/15/93 | | | | | |
| 100 | 1.5 | | | 15 | | | | @ 14.0 feet: wet, some water in the larger open macro pores. |
| | 1.5 | | | | | | | |
| | 1.5 | | | | | | | |
| | 2.0 | | | | | | | |
| | 2.0 | | | | | | | @ 20.0 feet: mottled, abundant macro pores. |
| | | | | 20 | | | | **BORING TERMINATED AT 20.0 FEET.** |

REMARKS

EMCON NORTHWEST

# WELL DETAILS

CLIENT Riverbend Landfill Company, Inc.
PROJECT NUMBER 0258-001.25
PROJECT NAME Gas Collection System
LOCATION McMinnville, Oregon
WELL PERMIT NO. N.A.

BORING / WELL NO. GP-04
TOP OF CASING ELEV. 132.77
GROUND SURFACE ELEV. 130.5
DATUM Feet-Mean Sea Level
INSTALLATION DATE 12/15/93

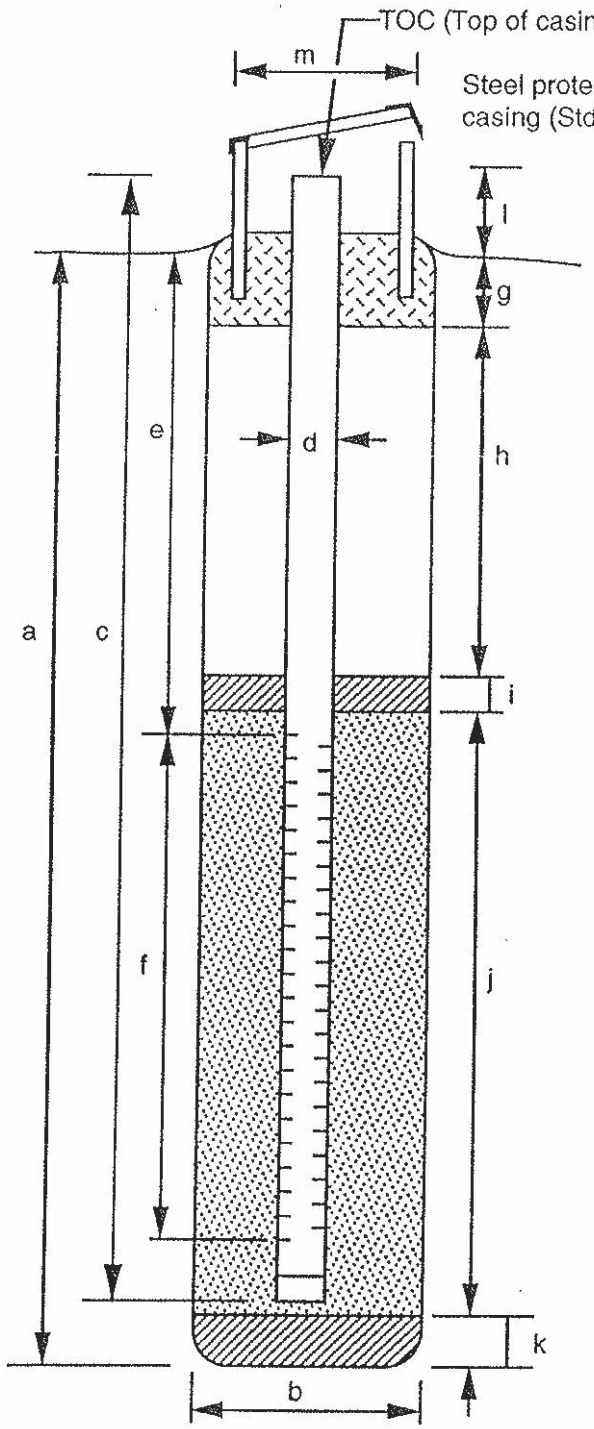


## EXPLORATORY BORING

a. Total depth 20.0 ft.
b. Diameter 8 in.
Drilling method Hollow Stem Auger

## WELL CONSTRUCTION

c. Total casing length 20.98 ft.
Material Schedule 80 PVC
d. Diameter 0.5 in.
e. Depth to top perforations 8.0 ft.
f. Perforated length 9.3 ft.
Perforated interval from 8.0 to 17.3 ft.
Perforation type Machine Slotted
Perforation size 0.030 Inches
g. Surface seal (0 to 0.5) 0.5 ft.
Material Concrete
h. Backfill N.A. ft.
Material N.A.
i. Seal (0.5 to 6.0) 5.5 ft.
Material Bentonite
j. Gravel pack 13.3 ft.
Gravel pack interval from 6.0 to 19.3 ft.
Material 3/8-Inch Gravel
k. Bottom seal/fill N.A. ft.
Material N.A
l. Casing stickup 2.3 ft.
m. Protective casing diameter 6.5 in.

Prepared by: Craig Fanshier

Ventura Mac 4 Rev. 7/23/91

# LOG OF EXPLORATORY BORING

| | | | |
|---|---|---|---|
| PROJECT NAME | Gas Collection System | BORING NO. | GP-06 |
| LOCATION | Riverbend Landfill; McMinnville, Oregon | PAGE | 1 OF 1 |
| DRILLED BY | Geo-Tech Explorations, Inc. | GROUND ELEV. | 148.40' |
| DRILL METHOD | Hollow Stem Auger | TOTAL DEPTH | 19.50' |
| LOGGED BY | Craig D. Fanshier | DATE COMPLETED | 12/16/93 |

| RECOVERY PERCENT | POCKET PENETRO-METER (Tons/SF) | PENETRATION (Blows/Ft) | GROUND WATER LEVELS | DEPTH IN FEET | SAMPLES | LITHOLOGIC COLUMN | WELL DETAILS | LITHOLOGIC DESCRIPTION |
|---|---|---|---|---|---|---|---|---|
| 78 | | | | | | | | **0 to 19.5 feet: CLAYEY SILT (ML)**, (10YR 4/3); low plasticity fines, abundant small macro pores (1/16- to 1/8-inch), some with reddish rust brown oxidized rinds; stiff; damp. |
| 100 | 1.5 | | | 5 | | | | |
| | 1.0 | | | | | | | |
| | 1.5 | | ▼ | | | | | @ 7.0 feet: moist. |
| | 1.0 | | 1/5/94 | | | | | |
| | 1.0 | | 12/16/93 ▽ | | | | | |
| 100 | 0.5 | | | 10 | | | | @ 9.5 feet: wet. |
| | 0.5 | | | | | | | |
| | 1.5 | | | | | | | @ 11.5 feet: possible soil horizon, trace organics. |
| | 2.0 | | | | | | | @ 12.0 to 13.0 feet: slightly harder, less macro pores, mostly 1/10-inch, approximately 2 to 3 per square inch. |
| | 1.5 | | | | | | | @ 13.5 feet: 0.4-foot thick SILTY SAND lense. |
| 100 | 1.0 | | | 15 | | | | |
| | 1.25 | | | | | | | |
| | 1.6 | | | | | | | |
| | 0.5 | | | | | | | |
| | 1.0 | | | | | | | |
| | | | | 20 | | | | BORING TERMINATED AT 19.5 FEET. |

REMARKS

**EMCON NORTHWEST**

# WELL DETAILS

CLIENT Riverbend Landfill Company, Inc.
PROJECT NUMBER 0258-001.25
PROJECT NAME Gas Collection System
LOCATION McMinnville, Oregon
WELL PERMIT NO. N.A.

BORING / WELL NO. GP-06
TOP OF CASING ELEV. 150.70
GROUND SURFACE ELEV. 148.4
DATUM Feet-Mean Sea Level
INSTALLATION DATE 12/16/93

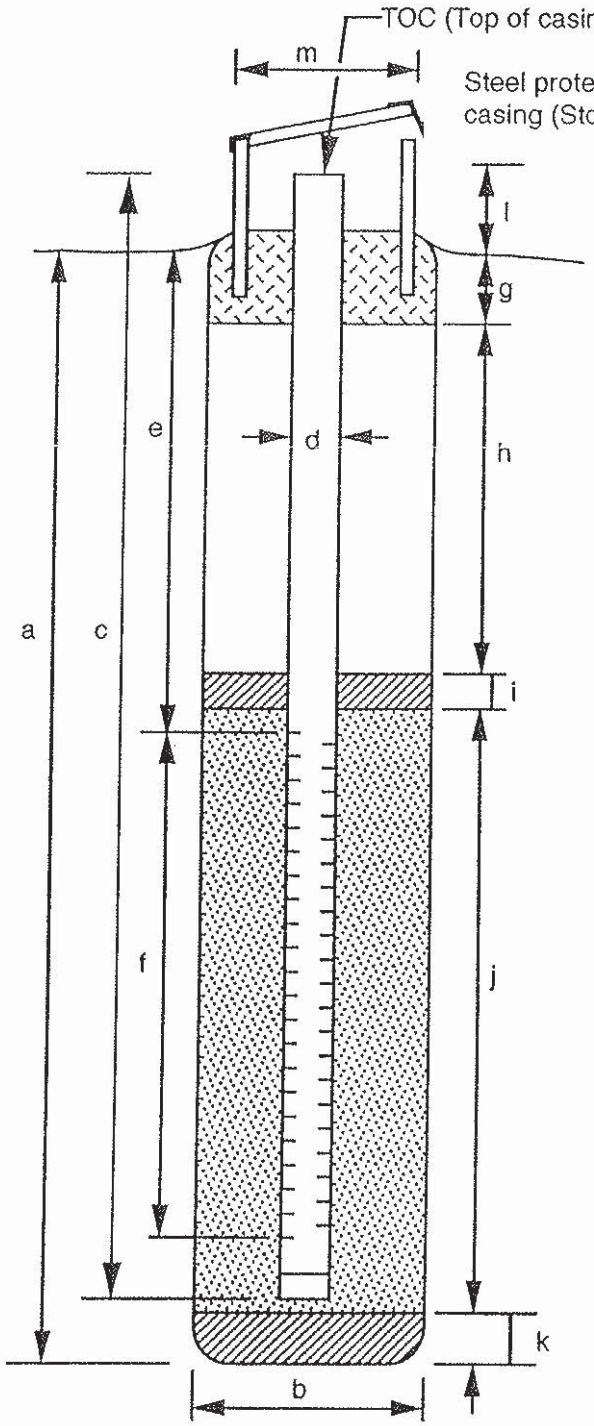


## EXPLORATORY BORING

a. Total depth 19.5 ft.
b. Diameter 8 in.
Drilling method Hollow Stem Auger

## WELL CONSTRUCTION

c. Total casing length 19.7 ft.
Material Schedule 1/2 PVC
d. Diameter 0.5 in.
e. Depth to top perforations 7.0 ft.
f. Perforated length 9.3 ft.
Perforated interval from 7.0 to 16.3 ft.
Perforation type Machine Slotted
Perforation size 0.030 Inches
g. Surface seal (0 to 0.5) 0.5 ft.
Material Concrete
h. Backfill N.A. ft.
Material N.A.
i. Seal (0.5 to 4.8) 4.3 ft.
Material Bentonite
j. Gravel pack 12.5 ft.
Gravel pack interval from 4.8 to 17.3 ft.
Material 3/8-Inch Gravel
k. Bottom seal/fill N.A. ft.
Material N.A
l. Casing stickup 2.3 ft.
m. Protective casing diameter 6.5 in.

Prepared by: Craig Fanshier

Ventura Mac 4 Rev. 7/23/91

# LOG OF EXPLORATORY BORING

| | | | |
|---|---|---|---|
| PROJECT NAME | **Waste Management** | BORING NO. | **GP-08R** |
| LOCATION | **Riverbend** | PAGE | **1 of 1** |
| DRILLED BY | **Boart Longyear** | APPROX. GROUND ELEV. | |
| DRILL METHOD | **Hollow-stem Auger** | TOTAL DEPTH | **18.0'** |
| LOGGED BY | **Jason Davendonis** | DATE COMPLETED | **9/29/08** |

| SAMPLE METHOD (SAMPLE NUMBER) | RECOVERY (percent) | BLOWS (per 6 inches) | LITHOLOGIC DESCRIPTION |
|---|---|---|---|
| | | | **0 to 6.3 feet: SILTY CLAY (CH)**; brown (7.5YR, 4/2); damp; slightly micaceous; medium plasticity. |
| SBS (S-1) | 33 | 4<br>4<br>3 | |
| | | | **6.3 to 11.1 feet: CLAYEY SILT (ML)**; dark yellowish brown (10YR, 4/4); damp; slightly micaceous; medium plasticity. |
| SBS (S-2) | 20 | 3<br>3<br>3 | |
| | | | **11.1 to 18.0 feet: SILTY CLAY (CH)**; dark yellowish brown (10YR, 4/4); moist; high plasticity; slightly micaceous. |
| SBS (S-3) | 86 | 2<br>2<br>3 | |
| SBS (S-4) | 100 | 1<br>2<br>3 | |
| | | | Bottom of boring = 18.0 feet. |

GROUND WATER LEVEL | DEPTH IN FEET | SAMPLES | WELL DETAILS | LITHO-LOGIC COLUMN

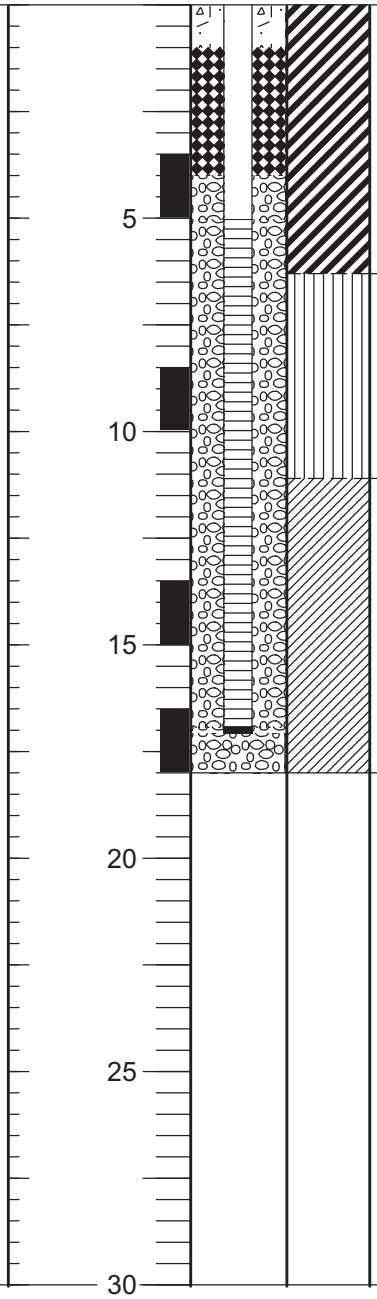


**WELL COMPLETION DETAILS**

0 to 5.03 feet: 1-inch-diameter (ID), flush-threaded, Schedule 40 PVC blank riser pipe.
5.03 to 16.92 feet: 1-inch-diameter (ID), flush-threaded, Schedule 40 PVC well screen with 0.010-inch machined slots.
16.92 to 17.07 feet: 1-inch-diameter (ID) PVC slip cap.

0 to 1.0 foot: Concrete.
1.0 to 4.0 feet: Bentonite chips hydrated with potable water.
4.0 to 18.0 feet: 3/8-inch pea gravel.

**REMARKS**

Drill rig = Mobile B-59. Boring was drilled with 8¼-inch-diameter augers. Soil samples were collected using 1½-inch inside-diameter by 18-inch-long split-barrel sampler with a 140-pound automatic hammer.

Shaw™ ENVIRONMENTAL, INC.

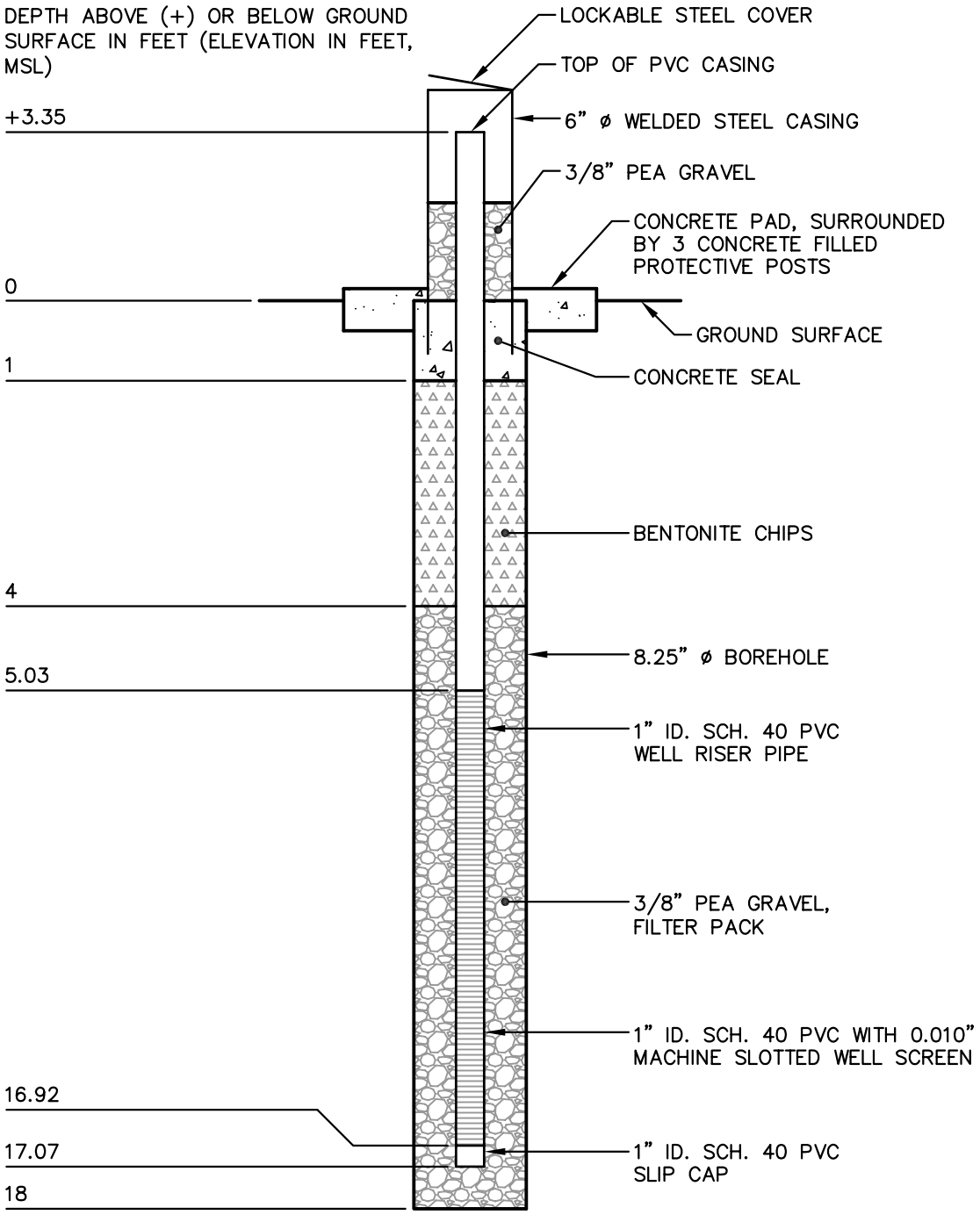


## NOTE:

1. STATE PLANE COORDINATES: 3993.5583 N, 5036.4643 E

NOT TO SCALE

Shaw® ENVIRONMENTAL, Inc.

This drawing represents intellectual property of SHAW, Inc. Any modification to the original by other than SHAW, Inc. personnel violates its original purpose and as such is rendered void. SHAW, Inc. will not be held liable for any changes made to this document without express written consent of the originator.

DATE 10/08
DWN JC
APP JD
REV
PROJECT NO. 133399

**FIGURE**
WASTE MANAGEMENT, INC.
RIVERBEND LANDFILL
McMINNVILLE, OREGON
**CONSTRUCTION DETAIL OF GAS PROBE GP-08R**

File: N:\Cad\Drawings\Waste Management\Landfills\Riverbend LF\Hydrogeology\detail\Riverbend Well GP-8R.dwg Layout: Layout1 User: jascha.coddington Oct 20, 2008 - 11:12am

# LOG OF EXPLORATORY BORING

| | | | |
|---|---|---|---|
| PROJECT NAME | Riverbend Landfill | BORING NO. | GP-9(R) |
| LOCATION | McMinnville, Oregon | PAGE | 1 OF 1 |
| DRILLED BY | Geo-Tech Exploration | GROUND ELEV. | 124.40' |
| DRILL METHOD | Hollow Stem Auger w/Split Spoon (SPT) | TOTAL DEPTH | 19.30' |
| LOGGED BY | Craig D. Fanshier | DATE COMPLETED | 08/24/94 |

| SAMPLE NUMBER SAMPLE TYPE | RECOVERY PERCENT | BLOW COUNTS (N COMP) | LITHOLOGIC DESCRIPTION |
|---|---|---|---|
| | | | 0 to 19.3 feet: SILTY CLAY (CL), dark brown (7.5YR 3/2); 5 percent small reddish brown mottles; medium plasticity fines; soft; damp. |
| S-1 | 53 | 3-5-7 (12) | @ 5.0 to 10.0 feet: SILTY CLAY (CL), gray with 20 to 30 percent reddish brown mottling, medium stiff. |
| S-2 | 100 | 3-4-7 (11) | @ 10.0 feet: damp to moist. |
| S-3 | 100 | 5-7-11 (18) | @ 15.0 feet: SILTY CLAY (CL), all gray; trace brown wood; moist to wet. |
| | | | Drilling terminated at 19.0 feet below ground surface. |

GROUND WATER LEVELS: ▽ 8/24/94

DEPTH IN FEET: 5, 10, 15, 20

SAMPLES

WELL DETAILS

LITHOLOGIC COLUMN

## REMARKS

Drilled with 8-inch O.D. (4.25-inch I.D.) hollow stem auger. Samples collected with either a 1.5-inch or 3-inch I.D. by 1.5-foot-long split spoon. A 1/2-inch PVC gas probe was constructed in the borehole. Well construction information presented in well details. See explanation for definition of symbols. GP-9(R) was installed approximately 50 feet east of GP-9, which was decommissioned.

EMCON
NORTHWEST

# WELL DETAILS

CLIENT Riverbend Landfill Company, Inc.
PROJECT NUMBER 0258-001.45
PROJECT NAME Monitoring Well Replacement
LOCATION McMinnville, Oregon
WELL PERMIT NO. N.A.

BORING / WELL NO. GP-09 (R)
TOP OF CASING ELEV. 127.82
GROUND SURFACE ELEV. 124.4
DATUM Feet-Mean Sea Level
INSTALLATION DATE 8/24/94

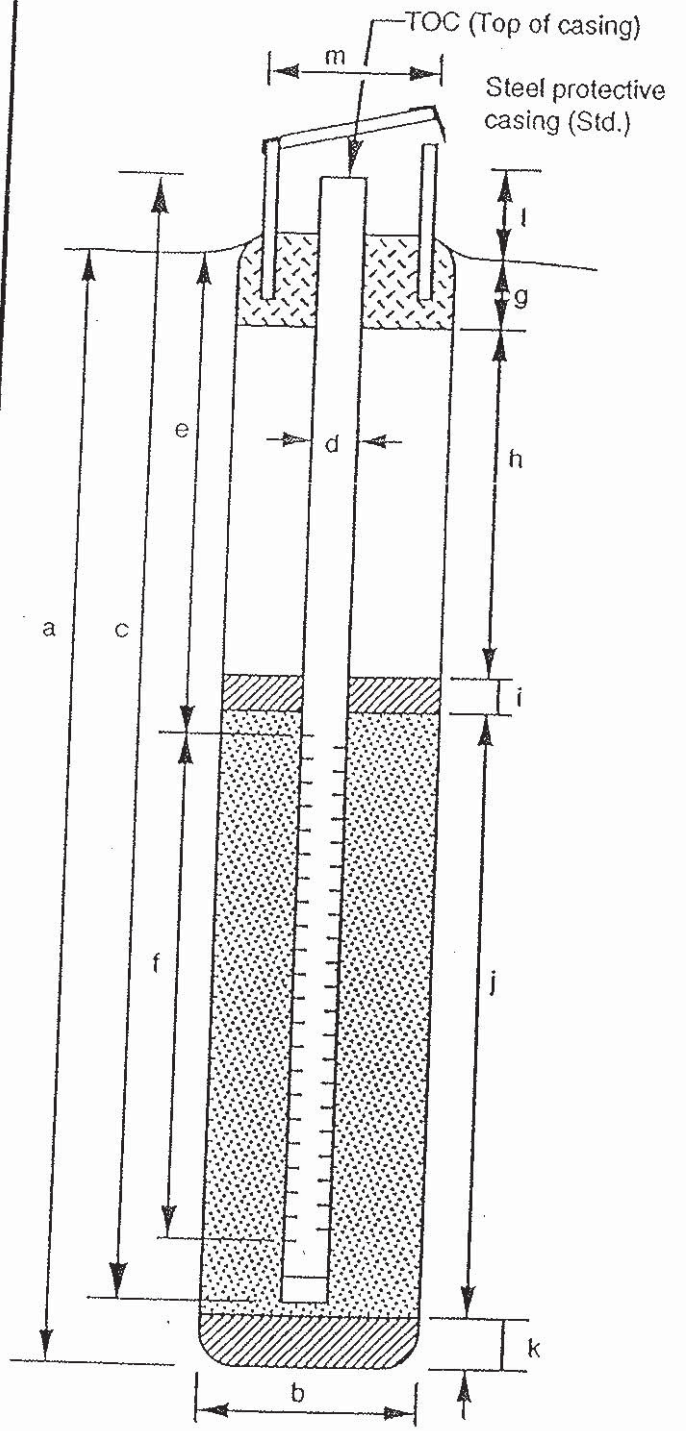


## EXPLORATORY BORING

a. Total depth 19.3 ft.
b. Diameter 8 in.
Drilling method Hollow Stem Auger

## WELL CONSTRUCTION

c. Total casing length (+2.5 to 17.0) 19.5 ft.
Material Schedule 80 PVC
d. Diameter 1/2 in.
e. Depth to top perforations 7.2 ft.
f. Perforated length 9.5 ft.
Perforated interval from 7.2 to 16.7 ft.
Perforation type Machine Slotted
Perforation size 0.30 Inches
g. Surface seal (0 to 2.5) 2.5 ft.
Material Concrete
h. Backfill N.A. ft.
Material N.A.
i. Seal (2.5 to 5.0) 2.5 ft.
Material Bentonite
j. Gravel pack 14.3 ft.
Gravel pack interval from 5.0 to 19.3 ft.
Material 3/8-Inch Pea Gravel
k. Bottom seal/fill N.A. ft.
Material N.A.
l. Casing stickup 2.5 ft.
m. Protective casing diameter 6.5 in.

Prepared by: Craig Fanshier
Note: GP-09 was decommissioned and GP-09 (R) was installed approximately 50 feet to the east.

# LOG OF EXPLORATORY BORING

| | | | |
|---|---|---|---|
| PROJECT NAME | **Waste Management** | BORING NO. | **GP-10R** |
| LOCATION | **Riverbend** | PAGE | **1 of 1** |
| DRILLED BY | **Boart Longyear** | APPROX. GROUND ELEV. | |
| DRILL METHOD | **Hollow-stem Auger** | TOTAL DEPTH | **16.0'** |
| LOGGED BY | **Jason Davendonis** | DATE COMPLETED | **9/29/08** |

| SAMPLE METHOD (SAMPLE NUMBER) | RECOVERY (percent) | BLOWS (per 6 inches) | LITHOLOGIC DESCRIPTION |
|---|---|---|---|
| | | | **0 to 16.0 feet: CLAY (CH)**; grayish brown (2.5Y, 5/2); damp; high plasticity; iron oxide throughout. |
| SBS (S-1) | 0 | 3 2 | |
| SBS (S-2) | 26 | 3 3 3 3 | |
| SBS (S-3) | 60 | 2 4 5 | |
| SBS (S-4) | 86 | 2 4 5 | @ 13.5 feet: dark gray (5Y, 4/1); medium plasticity. |
| | | | Bottom of boring = 16.0 feet. |

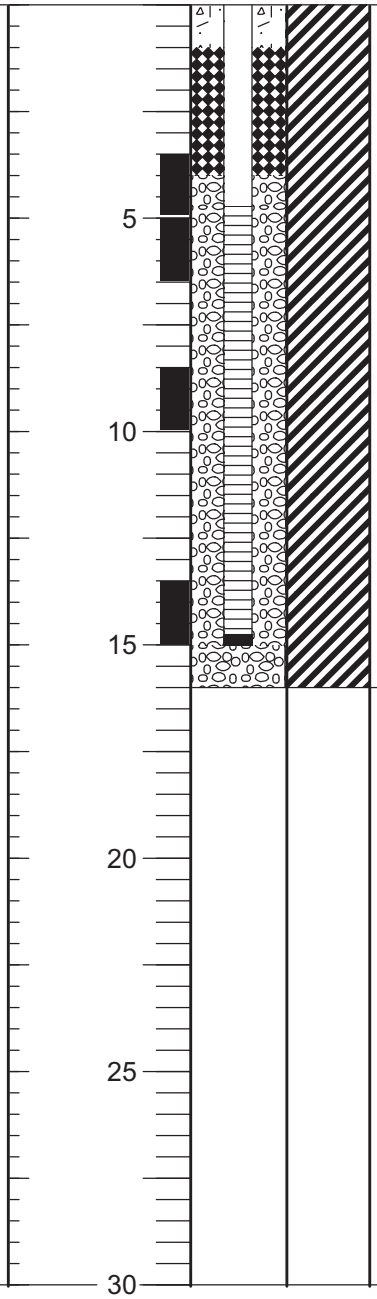


**WELL COMPLETION DETAILS**

0 to 4.72 feet: 1-inch-diameter (ID), flush-threaded, Schedule 40 PVC blank riser pipe.

4.72 to 14.76 feet: 1-inch-diameter (ID), flush-threaded, Schedule 40 PVC well screen with 0.010-inch machined slots.

14.76 to 15.01 feet: 1-inch-diameter (ID) PVC threaded cap.

0 to 1.0 foot: Concrete.

1.0 to 4.0 feet: Bentonite chips hydrated with potable water.

4.0 to 16.0 feet: 3/8-inch pea gravel.

**REMARKS**

Drill rig = Mobile B-59. Boring was drilled with 8¼-inch-diameter augers. Soil samples were collected using 1½-inch inside-diameter by 18-inch-long split-barrel sampler with a 140-pound automatic hammer.

Shaw™ ENVIRONMENTAL, INC.

WM-RIVER.gds:4.10/23/08.WM-RIVER...133399

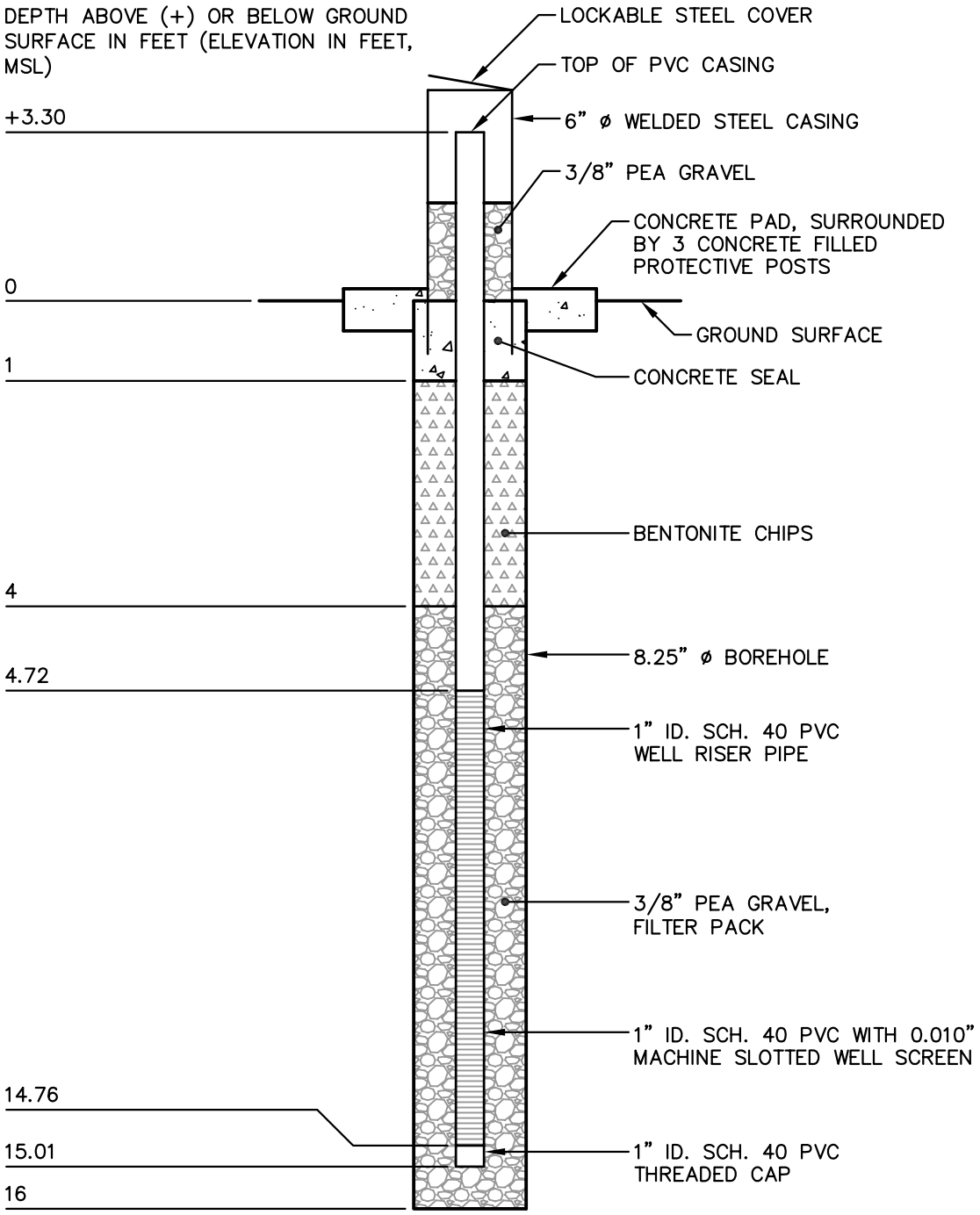


## NOTE:

1. STATE PLANE COORDINATES: 3639.2836 N, 6752.3721 E

NOT TO SCALE

Shaw® ENVIRONMENTAL, Inc.

This drawing represents intellectual property of SHAW, Inc. Any modification to the original by other than SHAW, Inc. personnel violates its original purpose and as such is rendered void. SHAW, Inc. will not be held liable for any changes made to this document without express written consent of the originator.

DATE 10/08
DWN JC
APP JD
REV
PROJECT NO. 133399

**FIGURE**
WASTE MANAGEMENT, INC.
RIVERBEND LANDFILL
McMINNVILLE, OREGON
**CONSTRUCTION DETAIL OF GAS PROBE GP-10R**

File: N:\Cad\Drawings\Waste Management\Landfills\Riverbend LF\Hydrogeology\detail\Riverbend Well GP-10R.dwg Layout: Layout1 User: jascha.coddington Oct 20, 2008 - 11:12am

# LOG OF EXPLORATORY BORING

| | | | |
|---|---|---|---|
| PROJECT NAME | Gas Collection System | BORING NO. | GP-11 |
| LOCATION | Riverbend Landfill; McMinnville, Oregon | PAGE | 1 OF 1 |
| DRILLED BY | Geo-Tech Explorations, Inc. | GROUND ELEV. | 121.60' |
| DRILL METHOD | Hollow Stem Auger | TOTAL DEPTH | 19.00' |
| LOGGED BY | Craig D. Fanshier | DATE COMPLETED | 12/17/93 |

| RECOVERY PERCENT | POCKET PENETROMETER (Tons/SF) | PENETRATION (Blows/Ft) | GROUND WATER LEVELS | DEPTH IN FEET | SAMPLES | LITHOLOGIC COLUMN | WELL DETAILS | LITHOLOGIC DESCRIPTION |
|---|---|---|---|---|---|---|---|---|
| 71 | 2.5 | | | | | | | 0 to 19.2 feet: SILTY CLAY (CL), very dark grayish brown (10YR 3/2); medium plasticity fines; some roots; very stiff; damp. |
| | 3.0 | | | | | | | |
| | 2.0 | | | | | | | |
| 100 | >4.5 | | | 5 | | | | @ 4.5 to 9.0 feet: approximately 50 percent reddish brown and gray mottled; approximately 1 to 2 very small macro pores per square inch; hard; damp. |
| | >4.5 | | | | | | | |
| | >4.5 | | | | | | | |
| | 3.0 | | | | | | | |
| | 3.0 | | 1/5/94 ▼ | | | | | @ 9.0 feet: moist. |
| 100 | 4.0 | | | 10 | | | | |
| | 3.5 | | | | | | | |
| | 2.6 | | | | | | | |
| | 2.5 | | | | | | | @ 12.5 feet: vertically oriented root traces with brown and black rinds (possibly organic) not oxidization/reduction rinds; approximately 1/4-inch gray reduction rinds around vertical root-trace; soil peds are poorly developed subangular blocks with smooth surfaces (clay deposition), glazed; moist. |
| | 3.5 | | ▽ 12/17/93 | | | | | |
| 100 | | | | 15 | | | | @ 14.0 feet: soil is tight; wet. |
| | 2.0 | | | | | | | |
| | 1.5 | | | | | | | @ 19.0 feet: approximately 60 percent gray, 40 percent brown. |
| | 1.75 | | | | | | | |
| | 1.5 | | | | | | | BORING TERMINATED AT 19.0 FEET. |
| | | | | 20 | | | | |

REMARKS

**EMCON NORTHWEST**

# WELL DETAILS

CLIENT Riverbend Landfill Company, Inc.
PROJECT NUMBER 0258-001.25
PROJECT NAME Gas Collection System
LOCATION McMinnville, Oregon
WELL PERMIT NO. N.A.

BORING / WELL NO. GP-11
TOP OF CASING ELEV. 123.97
GROUND SURFACE ELEV. 121.6
DATUM Feet-Mean Sea Level
INSTALLATION DATE 12/17/93

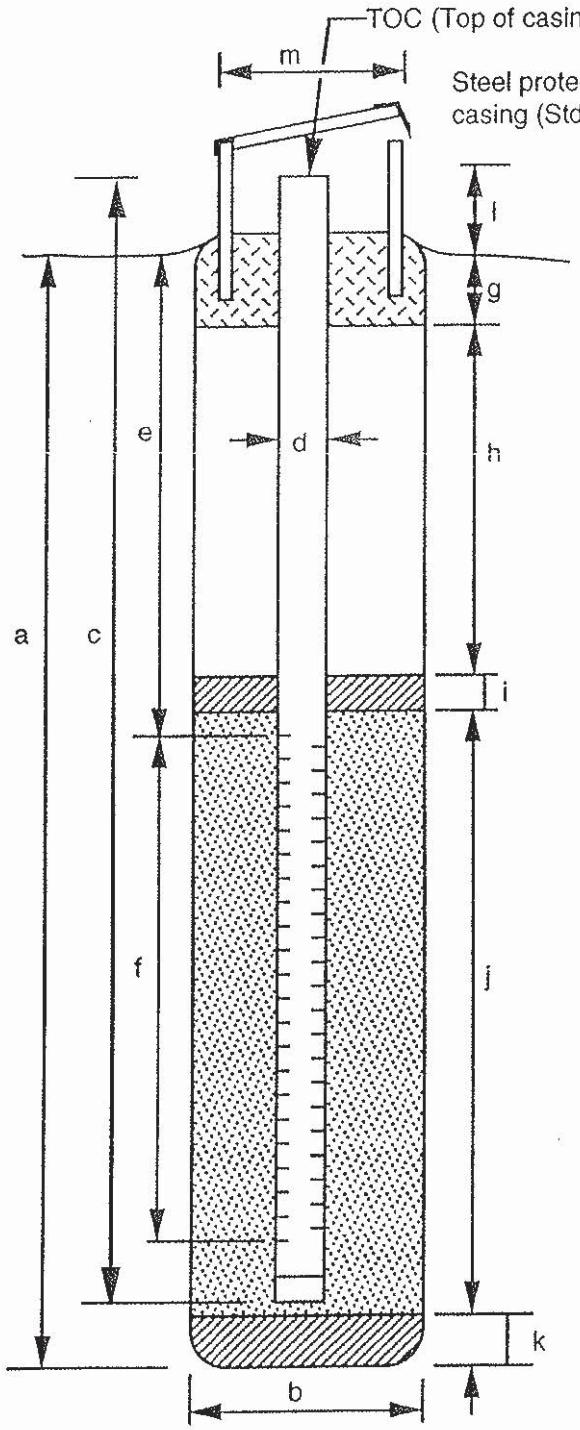


## EXPLORATORY BORING

a. Total depth 19.0 ft.
b. Diameter 8 in.
Drilling method Hollow Stem Auger

## WELL CONSTRUCTION

c. Total casing length 18.9 ft.
Material Schedule 1/2 PVC
d. Diameter 0.5 in.
e. Depth to top perforations 6.5 ft.
f. Perforated length 9.3 ft.
Perforated interval from 6.5 to 15.8 ft.
Perforation type Machine Slotted
Perforation size 0.030 Inches
g. Surface seal (0 to 0.5) 0.5 ft.
Material Concrete
h. Backfill N.A. ft.
Material N.A.
i. Seal (0.5 to 6.0) 5.5 ft.
Material Bentonite
j. Gravel pack 12.2 ft.
Gravel pack interval from 6.0 to 18.2 ft.
Material 3/8-Inch Gravel
k. Bottom seal/fill N.A. ft.
Material N.A
l. Casing stickup 2.4 ft.
m. Protective casing diameter 6.5 in.

Prepared by: Craig Fanshier

Ventura Mac 4 Rev. 7/23/91

# LOG OF EXPLORATORY BORING

| | | | |
|---|---|---|---|
| PROJECT NAME | Gas Collection System | BORING NO. | GP-12 |
| LOCATION | Riverbend Landfill; McMinnville, Oregon | PAGE | 1 OF 1 |
| DRILLED BY | Geo-Tech Explorations, Inc. | GROUND ELEV. | 127.00' |
| DRILL METHOD | Hollow Stem Auger | TOTAL DEPTH | 20.00' |
| LOGGED BY | Craig D. Fanshier | DATE COMPLETED | 12/16/93 |

| RECOVERY PERCENT | POCKET PENETRO-METER (Tons/SF) | PENETRATION (Blows/Ft) | GROUND WATER LEVELS | DEPTH IN FEET | SAMPLES | LITHOLOGIC COLUMN | WELL DETAILS | LITHOLOGIC DESCRIPTION |
|---|---|---|---|---|---|---|---|---|
| 16 | | | | | | | | **0 to 20.0 feet:** SILTY CLAY (CL), brown (7.5YR 4/2); with 10 to 20 percent evenly distributed (rust) reddish brown mottling; medium plasticity fines; stiff; damp. |
| 100 | 3.0 | | | 5 | | | | @ 5.0 feet: evenly colored with 50 percent brown, 25 percent rust red mottles, and 25 percent gray mottling; medium plasticity; moderate amount of macro pores approximately 1 to 2 per square inch of small ones (1/52-inch diameter) and approximately 1 to 2 per foot of core of larger ones, open, with minor amounts of gray reduced rinds, moderate to weakly developed angular blocks soil peds, with smooth surfaces; very stiff; damp to moist. |
| | 3.5 | | | | | | | |
| | 2.5 | | | | | | | |
| | 3.0 | | | | | | | |
| | 3.0 | | | | | | | |
| 32 | | | | 10 | | | | @ 11.0 feet: color changes to dark greenish gray (5GR 4/1). |
| | | | 1/5/94 ▼ | | | | | |
| 100 | | | ▽ 12/16/93 | 15 | | | | @ 15.0 feet: wet.<br>@ 16.0 feet: wet, soft zone. |
| | | | | 20 | | | | BORING TERMINATED AT 20.0 FEET. |

REMARKS

EMCON NORTHWEST

# WELL DETAILS

CLIENT Riverbend Landfill Company, Inc.

PROJECT NUMBER 0258-001.25

PROJECT NAME Gas Collection System

LOCATION McMinnville, Oregon

WELL PERMIT NO. N.A.

BORING / WELL NO. GP-12

TOP OF CASING ELEV. 129.30

GROUND SURFACE ELEV. 127.0

DATUM Feet-Mean Sea Level

INSTALLATION DATE 12/16/93

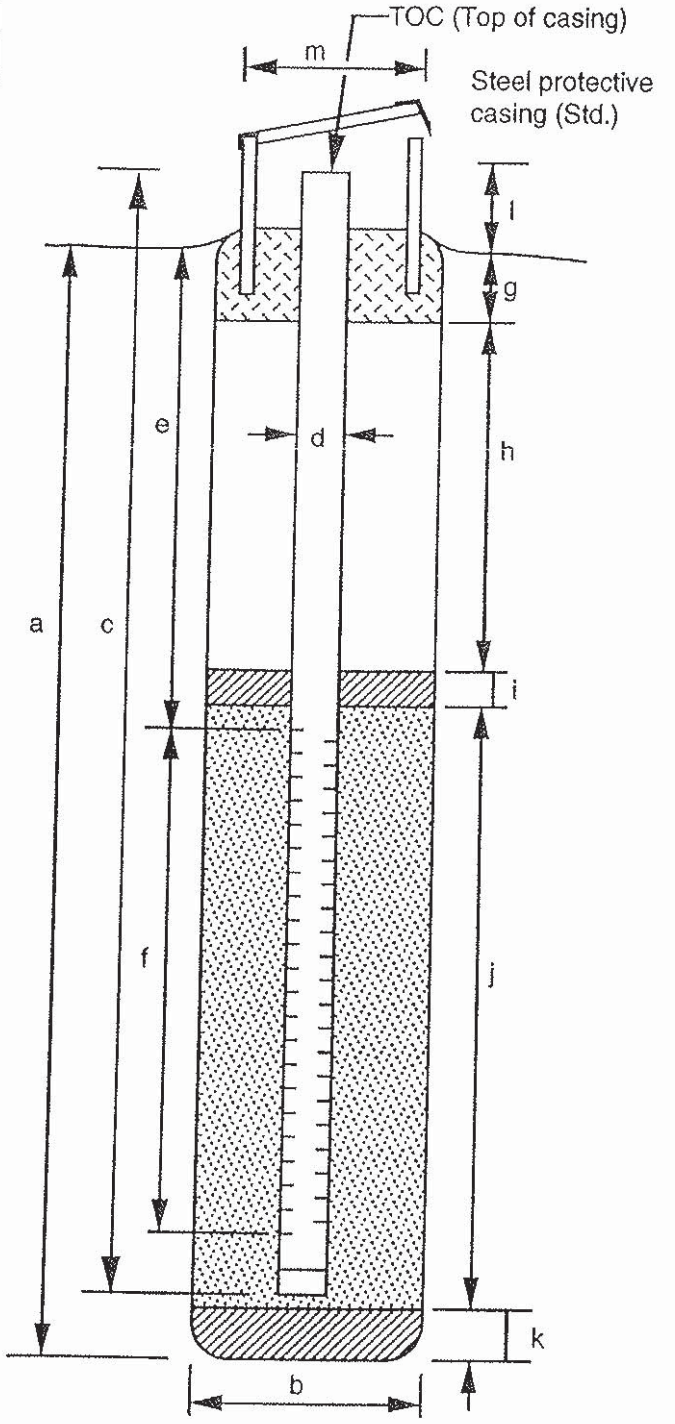


## EXPLORATORY BORING

a. Total depth 20.0 ft.

b. Diameter 8 in.

Drilling method Hollow Stem Auger

## WELL CONSTRUCTION

c. Total casing length 19.4 ft.

Material Schedule 1/2 PVC

d. Diameter 0.5 in.

e. Depth to top perforations 7.0 ft.

f. Perforated length 9.3 ft.

Perforated interval from 7.0 to 16.3 ft.

Perforation type Machine Slotted

Perforation size 0.030 Inches

g. Surface seal (0 to 0.5) 0.5 ft.

Material Concrete

h. Backfill N.A. ft.

Material N.A.

i. Seal (0.5 to 4.6) 4.1 ft.

Material Bentonite

j. Gravel pack 14.6 ft.

Gravel pack interval from 4.6 to 19.1 ft.

Material 3/8-Inch Gravel

k. Bottom seal/fill N.A. ft.

Material N.A

l. Casing stickup 2.3 ft.

m. Protective casing diameter 6.5 in.

Prepared by: Craig Fanshier

Ven. ac 4 Rev. 7/23/91

# SCS ENGINEERS

# BORING LOG

14945 SW Sequoia Parkway, Suite 180
Portland, OR 97224

**BORING NUMBER: GP-13**



**Riverbend Landfill Company**
**Riverbend Landfill**
**McMinnville, Oregon**

**JOB NUMBER: 04213026.00**

REMARKS:
CME 75 drill rig. Top of ball valve elevation = 144.27 feet.
Northing = 4187.4335 Easting = 5071.2743

| Depth (meters) | Depth (feet) | Sample Location | Sample Number | Blow Counts | OVM (ppm) | USCS Soil Class. | Graphic Log | Description |
|---|---|---|---|---|---|---|---|---|
| 0 | 0 | | | | | CL | | SILTY CLAY (CL), Brown (7.5YR 4/2), very moist, medium plasticity. |
| 1 | 3 | | | | | | | |
| 2 | 6 | | | | | ML | | CLAYEY SILT (ML), Dark yellowish brown (10YR 4/4), very moist, medium plasticity |
| 3 | 9 | | | | | | | |
| 4 | 12 | | | | | | | Total Depth = 12.5 feet |
| 5 | 15 | | | | | | | Above ground completion includes a 6-inch steel protective monument and three bollard posts. |
| 6 | 18 | | | | | | | |
| | 20 | | | | | | | |

Completion Detail

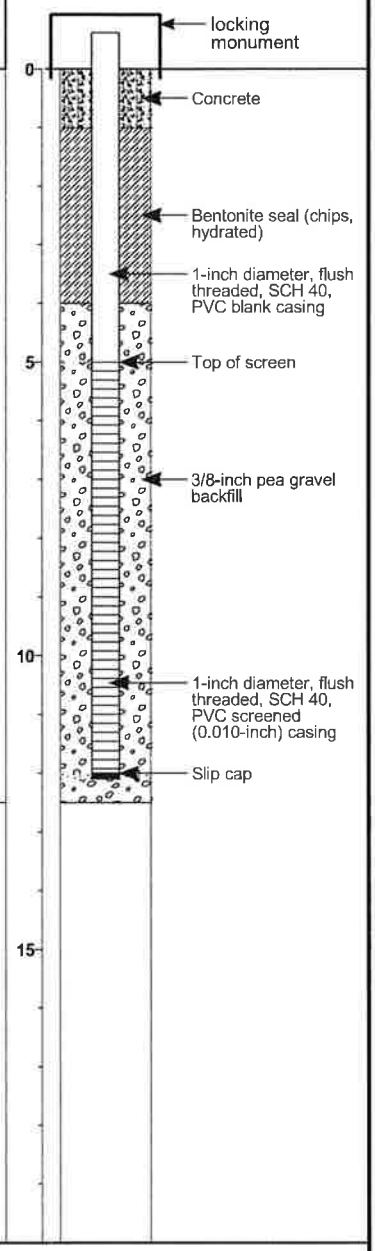


| | | | |
|---|---|---|---|
| Drilling Company: | **Western States** | Date Started: | **6/26/13** |
| Drilling Method: | **Hollow Stem Auger** | Date Ended: | **6/26/13** |
| Logged By: | **T. Andrews** | Boring Diameter: | **8-inches** |
| Sampling Method: | **See legend for explanation of sample types** | Well Diameter: | **1-inch** |
| | | Elevation: | **141.8 ft.** |
| | | Total Depth: | **12.5 ft.** |

STANDARD_LOG RIVERBEND 04213026.00.GPJ STD_LOG.GDT 7/23/13

# SCS ENGINEERS

# BORING LOG

14945 SW Sequoia Parkway, Suite 180
Portland, OR 97224

**BORING NUMBER: CGP-14** Page 1 of 1

**Riverbend Landfill Company**
**Riverbend Landfill**
**McMinnville, Oregon**

**JOB NUMBER: 04213026.01**

REMARKS:
Geoprobe 772 ODT drill rig. Top of ball valve elevation = 152.42
Northing = 4409.3 Easting = 4197.2

| Depth (meters) | Depth (feet) | Sample Location | Sample Number | Blow Counts | OVM (ppm) | USCS Soil Class. | Graphic Log | Description |
|---|---|---|---|---|---|---|---|---|
| 0 | 0 | | | | | | | Surface, landscaped ground. |
| | 1 | | | | | CL | | SILTY CLAY (CL), Brown (2.5Y 4/4), slightly moist, minor roots in upper 1.5'. |
| 1 | 2 | | | | | | | |
| | 3 | | | | | | | |
| | 4 | | | | | | | |
| | 5 | | | | | | | |
| | 6 | | | | | CL | | Same as above, at 6' becomes very moist to wet. |
| 2 | 7 | | | | | | | |
| | 8 | | | | | | | |
| | 9 | | | | | | | |
| 3 | 10 | | | | | | | |
| | 11 | | | | | | | |
| | 12 | | | | | | | |
| 4 | 13 | | | | | | | Total Depth = 13.3 feet<br>Above ground completion includes a 6-inch steel protective monument and three bollard posts. |
| | 14 | | | | | | | |
| | 15 | | | | | | | |
| 5 | 16 | | | | | | | |
| | 17 | | | | | | | |
| | 18 | | | | | | | |
| | 19 | | | | | | | |
| 6 | 20 | | | | | | | |

Completion Detail

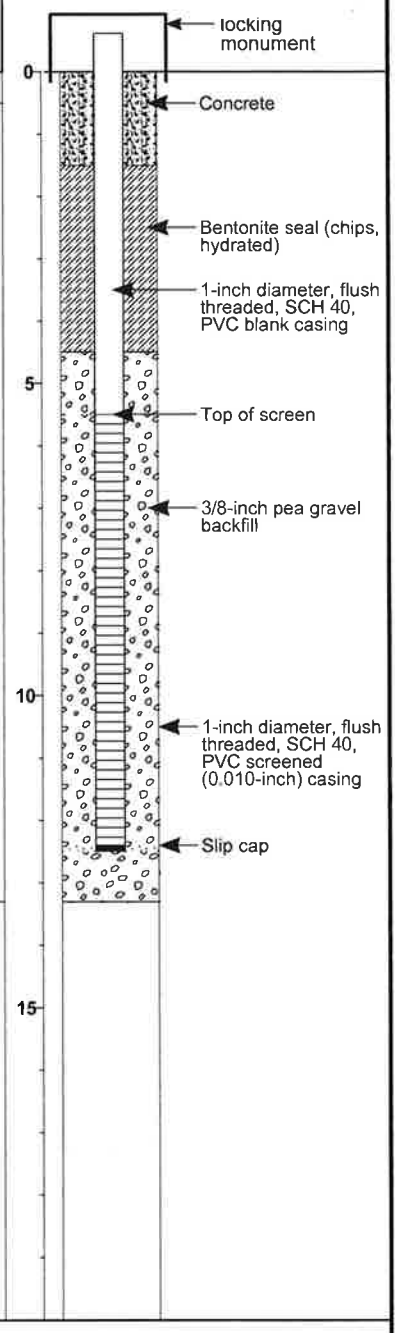


Drilling Company: **Cascade Drilling**
Drilling Method: **Hollow Stem Auger**
Logged By: **T. Andrews**
Sampling Method: **See legend for explanation of sample types**

Date Started: **12/12/13**
Date Ended: **12/12/13**
Boring Diameter: **8-inches**
Well Diameter: **1-inch**
Total Depth: **13.3 ft.**

STANDARD_LOG RIVERBEND 04213026 00 V2.0.GPJ STD_LOG.GDT 12/20/13

# APPENDIX C

## Sampling and Analysis Plan

SCS ENGINEERS









# APPENDIX C

# SAMPLING AND ANALYSIS PLAN

**Riverbend Landfill**
**Yamhill County, Oregon**

**December 2, 2014**

# Table of Contents

**Section** **Page**

List of Tables and Figures ..... ii
1.0 Introduction ..... 1
2.0 Standard Operating Procedures (SOPs) ..... 2
2.1 Monitoring Point Inspection ..... 2
2.1.1 Maintenance ..... 2
2.1.2 Replacement ..... 2
2.2 Groundwater Elevation Measurements ..... 3
2.3 Field Meter Operations ..... 3
2.3.1 Use ..... 4
2.3.2 Calibration ..... 4
2.4 Groundwater Sampling Methods and Procedures ..... 4
2.4.1 Equipment ..... 4
2.4.2 Sampling Methods ..... 5
2.4.3 Sampling Procedures ..... 7
2.5 Leachate and Secondary Collection System Liquid Sampling Procedures ..... 8
2.6 Surface Water Sampling Procedures ..... 8
2.7 Equipment Cleaning and Decontamination ..... 9
2.7.1 Sampling Equipment ..... 9
2.7.2 Water Level Measurement Equipment ..... 9
2.8 Sample Handling ..... 9
2.8.1 Sample Preservation ..... 9
2.8.2 Sample Storage and Shipping ..... 10
2.9 Sampling Documentation ..... 10
2.9.1 Field Sampling Data Sheet ..... 10
2.9.2 Chain-of-Custody ..... 11
2.9.3 Laboratory Sample Handling ..... 11
2.10 Field Quality Assurance/Quality Control Procedures ..... 12
2.10.1 Trip Blanks ..... 12
2.10.2 Field Blanks ..... 12
2.10.3 Equipment Blanks ..... 12
2.10.4 Duplicate Samples ..... 13
3.0 Laboratory Analysis ..... 14
3.1 QA/QC Procedures ..... 14
3.1.1 Data Record-Keeping Requirements ..... 15
4.0 References ..... 16

## List of Tables

Table C-1 Method Descriptions, Volume and Preservation Requirements, and Holding Times

## List of Figures

Figure C-1 Example Field Sampling Data Sheet

Figure C-2 Example Chain-of-Custody Form

# 1.0 INTRODUCTION

This sampling and analysis plan (SAP) presents site-specific methods to be used to sample and analyze groundwater, surface water, leachate collection and recovery system (LCRS) sumps, and liquid in the leachate secondary collection system (LSCS) sumps at the Riverbend Landfill (RL), McMinnville, Oregon. The SAP includes sampling documentation, sampling procedures, field quality assurance/quality control (QA/QC) procedures, sample handling, laboratory QA/QC procedures, analytical methods, and data record-keeping requirements. Methods and procedures for monitoring landfill gas (LFG) are provided in the LFG monitoring plan presented in Appendix B of the updated environmental monitoring plan (EMP).

This SAP is designed to produce data of a known quality by using appropriate and consistent methods (standard operating procedures [SOPs]) for sample collection, handling, and analysis. The purpose of the SAP is to present acceptable sampling protocols that will provide representative, systematic, and consistent water quality data. When new sampling methods (protocol, equipment, or procedures) or updated laboratory analytical methods are identified, they may be incorporated into this SAP. Requests to change sampling methods or laboratory analytical methods will be submitted to the Oregon Department of Environmental Quality (DEQ) for review and comment. Changes will be implemented only after the DEQ approves a specific request.

To ensure good sampling procedures and to make certain health and safety protocols are being met during monitoring activities, all sampling-related activities are performed by personnel trained in proper sampling protocols in accordance with this SAP.

# 2.0 STANDARD OPERATING PROCEDURES (SOPS)

SOPs are intended for use by properly trained field personnel. When sampling conditions require a deviation from an SOP, the change will be documented on the appropriate sampling form or field notes.

## 2.1 MONITORING POINT INSPECTION

The physical integrity of the monitoring wells and piezometers is crucial. Monitoring wells generally require little maintenance and the security casing and the area surrounding the wellhead are generally the only well components requiring attention.

### 2.1.1 Maintenance

Before each monitoring device (monitoring well, piezometer, and LFG probe) is monitored, the condition of the well being sampled and its surroundings will be examined and noted in the field notes or on the field sampling data sheet (FSDS; see Figure C-1[1]). This information includes noting the condition of the well identification labeling, security casing and concrete footing, as well as any evidence of tampering and signs of surface contamination. The following tasks will be performed as necessary:

- Monitoring point identification numbers will be kept legible at all times.
- Security locks will be kept clean and the key assembly lubricated.
- Excess vegetation will be cleared around the wells and probes for ease of access.
- Vehicular access to the monitoring locations will be maintained.

### 2.1.2 Replacement

Consistent with DEQ requirements, Riverbend Landfill Company (RLC) will notify the DEQ in writing within 14 days of discovering a well or probe that is damaged and must be repaired or replaced. The written notification will (1) identify the monitoring device being replaced, the reasons for its replacement, and its new proposed location and construction details, (2) describe the proposed replacement measure, and (3) present a time schedule for completing the work. When required, monitoring wells will be decommissioned, replaced, repaired, or installed consistent with DEQ guidance (DEQ, 1992) and Oregon Water Resources Department (OWRD) rules found in Oregon Administrative Rule (OAR) 690-240 (OWRD, 1994), consistent with DEQ requirements.

[1] The FSDS form in Figure C-1 is from SCS Engineers, the contract consultant performing environmental monitoring at RL as of the date of the updated EMP. A similar FSDS form or other type of form may be used in the future if comparable information is included.

## 2.2 GROUNDWATER ELEVATION MEASUREMENTS

Before purging and sampling, the depth to groundwater will be measured using an electronic water level probe in all accessible network wells and piezometers using the following procedure:

- The protective shroud installed over the monitoring well will be unlocked and the well cap removed.
- The water level probe will be decontaminated before its use in each well to reduce the potential for cross-contamination (as described in Section 2.7.2).
- Water level will be measured with the electronic water level probe.
- Water levels will be recorded on the FSDS (see Figure C-1) to the nearest 0.01 foot. The date (month, day, and year) and time (24-hour clock) of each measurement will be recorded.
- The water level will be measured by raising and lowering the probe at least three times and the water level measurement will be recorded when stable.
- The measurement will start from the reference point or other mark on the top of the well casing.
- Care will be taken so that the water level measuring device hangs freely and does not adhere to the wall of the well casing.
- The groundwater elevation at each monitoring location will later be calculated from the measured distance between the reference elevation measuring point and the top of the water column. The groundwater elevation data will be used to compute groundwater flow directions, gradients, and velocities

During resampling events or other non-routine sampling activities, the depth to groundwater will be measured only at the resampling location.

## 2.3 FIELD METER OPERATIONS

Field meters will be used to measure water quality parameters during sample collection. Field meters to be used routinely will measure pH, temperature, specific conductance, dissolved oxygen, and oxidation-reduction potential (ORP). Other field meters may include, but not limited to, a flame ionization detector and a photoionization detector.

The field personnel must have backup meters available in the event that the primary meter malfunctions. The field personnel must maintain and calibrate the meters (as described below) at recommended frequencies and maintain a logbook or other acceptable documentation that records the maintenance and calibration of each meter.

#### 2.3.1 Use

- During well purging and sample collection, the temperature, pH, dissolved oxygen, specific conductance, and ORP of samples will be measured with portable water quality meters.
- When possible, the groundwater measurements will be taken using a flow-through cell to prevent exposing groundwater to the atmosphere.
- Measurements will be recorded to the following standards: pH to ±0.1 standard units (S.U.), specific conductance to ±1 microSiemens per centimeter (µS/cm), dissolved oxygen to ± 0.1 milligrams per liter (mg/L), temperature to ±0.1 degrees Celsius (°C), and ORP ± 1 millivolts (mV).
- The field meters will be operated consistent with the manufacturers' recommendations. The manufacturers' instrument manuals should be available for reference during sampling.

#### 2.3.2 Calibration

- Instruments will be calibrated daily to a known standard before they are used, and if required, they will be checked periodically through the day.
- Calibration standards will be prepared according to the instrument manufacturer's specifications.
- Calibration procedures, dates, and times will be recorded in the field.

## 2.4 GROUNDWATER SAMPLING METHODS AND PROCEDURES

### 2.4.1 Equipment

Before it is taken into the field, non-dedicated equipment should be cleaned or decontaminated (as described in Section 2.7.1), and checked to ensure the equipment is functioning properly.

#### 2.4.1.1 *Pumps*

All the compliance monitoring wells (as identified in Section 3.2.1 the EMP) are equipped with dedicated QED bladder pumps to prevent the potential for cross-contamination during sampling. Bladder pumps are submersible mechanisms consisting of a flexible membrane Teflon® bladder enclosed in a rigid polyvinyl chloride (PVC) housing. The internal bladder can be compressed and expanded under the influence of compressed gas (air, nitrogen, or carbon dioxide). Water enters the bladder through the lower check-valve; compressed gas is injected into the cavity between the housing and the bladder. The groundwater sample is transported through the upper check-valve and into the discharge line through compression of the bladder. The upper check-valve prevents water

from re-entering the bladder. The process is repeated to cycle the water to the surface. The dedicated pumps are positioned in the wells such that the pump intake is within the well screen interval.

Under no circumstances should pumps without check-valves, or other mechanisms to prevent backflow, be used during purging or sampling.

Non-dedicated pumps must be used only on a temporary basis, and with RLC management's approval. When non-dedicated pumps or sampling devices are used, stringent cleaning procedures must be followed between sampling locations (see Section 2.7.1). Equipment blanks must also be obtained, in accordance with procedures describe in Section 2.10.3.

#### 2.4.1.2 *Bailers*

Bailers should only be used on a temporary basis if no other sampling equipment is available or if otherwise necessary (e.g., if there is inadequate volume to use a pump). Bailers should be made of suitable inert materials (such as polyethylene, stainless steel, PVC, or Teflon®) when monitoring for organic compounds. Stainless-steel or Teflon® bailers should be used for such applications as "oily" matrices where ease of cleaning and durability are a factor. PVC bailers with non-glued joints may also be used.

When bailers are used, the bailer cord shall be fastened securely to the bailer and shall be constructed of nylon, stainless steel, or polypropylene, and preferably braided. This cord must be new or decontaminated (see Section 2.7.1), and in good condition. The end of the cord should be fastened to the well cap or to a large spool to prevent the cord and bailer from being accidentally lost in the well. The cord's connection to the bailer must be checked with each bail during purging. Care should be taken not to excessively disturb the column of water in the well casing. Gently lower the bailer into the well with each cycle. Attempt to lower the bailer into the water only to the extent necessary to fill or partially fill the chamber.

Non-dedicated bailers must be thoroughly decontaminated (see Section 2.7.1) and triple-rinsed with distilled water (or laboratory reagent water) before and after sampling at each location. Equipment blanks must also be obtained in accordance with procedures describe in Section 2.10.3. Dedicated bailers or single-use disposable bailers do not require decontamination.

### 2.4.2 Sampling Methods

Both traditional and low-flow purge sampling methods are used at the site. Wells screened in the shallow silt-clay water-bearing zone (WBZ) will be sampled using the traditional purging technique of three casing volumes, and wells screened in the deeper sand-gravel WBZ will be sampled using the low-flow purging and sampling technique. The following sections describe the procedures for well purging and sampling using the traditional purging and low-flow purging techniques. Any modification to the currently employed purging methods will require approval by the DEQ before implementation.

#### 2.4.2.1 *Traditional Sampling Method*

A minimum of three well casing volumes (water in the sandpack around the well is not considered when computing the volume to purge), unless the well purges dry[2], are purged to draw representative formation water into the well for sampling. The casing volume will be calculated by determining the inside diameter of the monitoring well and the height of water (feet) in the casing. Water quality parameters (pH, temperature, specific conductance, dissolved oxygen, and ORP) are monitored and recorded on the FSDS after each incremental volume of water in the well casing has been purged.

The acceptable standards for parameter stabilization for the final three incremental purge volumes are as follows:

- pH: ±0.3 S.U.
- Temperature: ±10 percent.
- Specific conductance: ±10 percent.
- Dissolved oxygen: ±10 percent.
- ORP: no standard.

#### 2.4.2.2 *Low-Flow Purge Sampling Method*

Low-flow purge sampling is based on the principle that water flowing through an aquifer and a well screen results in a continuous purging of the screened interval of the well and provides representative samples without disturbing overlying standing water (Robin and Gillham, 1987; Powell and Puls, 1993; Puls and Barcelona, 1995). The goal of this method is to obtain a sample from the screened interval without drawing potentially stagnant water from the well casing into the sample. Low-flow sampling reduces the volume of water that must be purged and can reduce the variability of the analytical data by eliminating some of the drawbacks associated with the traditional sampling method. Deeper wells, wells with screens located in lower confined aquifers, and wells that yield sufficient water with minimal measurable drawdown during purging (i.e., shows no more than a 0.3-foot drop for the last three water level measurements) are good candidates for the low-flow purge sampling method.

There are three basic requirements for low-flow purge sampling:

- The use of dedicated sampling equipment. Inserting sampling equipment disturbs potentially stagnant water stored in the well casing and mixes it with the water in the screened interval.

[2] If a monitoring well purges dry (i.e., water level below the dedicated bladder pump intake) when using traditional sampling method before three casing volumes are removed, then the well is allowed to re-charge. Groundwater samples are collected after the well has either recovered to 90 percent of its original water level or within a 24-hour period.

- The intake of the dedicated sampling pump should be positioned approximately in the middle of the well screen.

- Flow rates must be low enough to avoid degassing the sample and to achieve no more than 0.3-foot drawdown of the water level to prevent mixing inside the well (a pumping rate of 500 milliliters per minute [mL/min] or less should be used).

Field water quality parameters (pH, temperature, specific conductance, dissolved oxygen, and ORP) will be monitored and recorded on an FSDS during low-flow purging. Field water quality parameters will be measured at intervals that assure that the water in the flow-through cell has been completely exchanged with formation water from the well, which is dependent on the volume of the flow-through cell and pumping rate. The stabilization of these parameters indicates that the pump purge water is representative of formation water and samples can be collected.

The acceptable standards for parameter stabilization at the completion of low-flow purging are as follows:

- pH: ±0.1 S.U.

- Temperature: ±1.0 °C.

- Specific conductance: ±5.0 percent.

- Dissolved oxygen: ±0.5 mg/L.

- ORP: no standard.

### 2.4.3 Sampling Procedures

#### 2.4.3.1 *Sample Collection and Description*

After purging a well, the flow-through cell is disconnected, and laboratory-supplied bottles are filled from the discharge tube of the dedicated bladder pump. When collecting samples for volatile organic compound (VOC) analysis, the pump flow rate should be regulated to approximately 100 mL/min to minimize turbulence and aeration in the pump effluent. A physical description of the sample, including the sample color, clarity, foaming, and any other physical characteristics will be recorded on the FSDS.

A sufficient volume of liquid must be collected to allow for analysis of all required parameters. If the volume of water is insufficient for collecting the requisite suite of samples, then the following general sample collection order should be followed: (1) VOCs, (2) common anion and cations, (3) leachate indicator parameters, and (4) trace metals.

#### 2.4.3.2 *Field-Filtering*

Filtering is necessary to determine the concentration of ions and compounds that are dissolved in the groundwater rather than present as particulates. If the water is not filtered, ions or compounds

naturally present in, or adsorbed to, suspended particles may be released when samples are preserved and analyzed. This release can result in higher total constituent concentrations than are actually present in the groundwater sample in the dissolved phase.

Groundwater samples collected for dissolved metals and dissolved trace metals analysis (see Table C-1) will be field-filtered in compliance with OAR 340-94-080 and Subtitle D. However, the field-filtered trace metals sample will only be analyzed for the dissolved content if analytical data indicates that the total suspended solids concentration exceeds 100 mg/L for a sample.

Field-filtering for dissolved constituent analysis will be performed using 0.45-micron-membrane disposable pressure filters. The filters will be attached directly to the bladder pump discharge line. As the pump cycles, the effluent will be pressured through the filter and directed into the appropriate containers. At least one pump cycle should be purged through the filter prior to filling the sample containers. Filters will be used only once.

## 2.5 LEACHATE AND SECONDARY COLLECTION SYSTEM LIQUID SAMPLING PROCEDURES

The LCRS and LSCS monitoring networks are described in Section 4.2 of the EMP. Before sampling, the general condition of each riser and its surroundings shall be recorded in the field notes or on an FSDS.

Before sample collection, the liquid level at each location will be recorded from the transducer readout. Leachate and LSCS liquid samples shall be collected directly from dedicated pumps at the primary and secondary sumps. Leachate samples should not be field-filtered except for dissolved cation analyses. A description of the sample (including color, clarity, foaming, and any other physical characteristic) and field parameter measurements (including pH, temperature, specific conductance, dissolved oxygen, and ORP) shall also be recorded on an FSDS. Leachate samples should not be placed in the same coolers used for shipping groundwater samples.

## 2.6 SURFACE WATER SAMPLING PROCEDURES

The surface water monitoring network is described in Section 5.2 of the EMP. Before surface water samples are collected, the sampler should note any areas of dead or distressed vegetation, odors, discolored water, weather conditions, or nearby activities and document this information in the field notes or on the FSDS. Field measurements for pH, temperature, specific conductance, dissolved oxygen, and ORP must be collected and recorded on the FSDS at each sampling location before samples are collected. Surface water quality field parameters are measured by submerging the probes into the body of water or by collecting a grab sample.

The location of the sample point should be selected carefully to ensure it is representative and to avoid intrusion of bottom sediments into the sample container. Surface water samples shall be collected by gently dipping the laboratory-supplied bottles below the surface of the water, removing the caps, and slowly filling the bottles. Care should be taken when filling the pre-preserved laboratory-supplied bottles to assure that the sample preservatives do not spill into the surface water

body. The container mouth or opening should be positioned so it faces downstream if flowing water is encountered. The sampler should wear gloves, and when necessary, stand in a downstream position to prevent any sources of cross contamination and sediment disturbance. Surface water samples should not be field-filtered.

## 2.7 EQUIPMENT CLEANING AND DECONTAMINATION

If non-dedicated equipment is used to collect water quality samples, it must be decontaminated using the procedures below.

### 2.7.1 Sampling Equipment

All non-dedicated sampling equipment will be decontaminated in the following sequence before samples are collected at any monitoring well, leachate or LSCS sump:

- Rinse with tap or distilled water.
- Wash with a dilute mixture of non-phosphatic detergent (Liquinox or its equivalent) and tap or distilled water.
- Finally, rinse with distilled water.

### 2.7.2 Water Level Measurement Equipment

At a minimum, the portion of the water level probe that enters the water (in most cases the tip of the water level probe) and an approximate 5-foot section above the probe tip will be decontaminated before its use in each well. Decontamination will consist of a distilled water rinse, a Liquinox (or equivalent) and water solution scrub, and a final distilled water rinse as described in Section 2.7.1.

## 2.8 SAMPLE HANDLING

The sample containers will be prepared and provided by the analytical laboratory. Samples must be properly and carefully handled to ensure that they are representative of the sampled media.

### 2.8.1 Sample Preservation

Samples will be preserved consistent with laboratory recommendations (see Table C-1). The type and size of container used for each analysis and the type of preservative, if any, will be recorded on the FSDS. Each analytical parameter has its own preservation requirement, as follows:

- All metals (total or dissolved) and hardness samples are preserved with nitric acid ($HNO_3$).
- Indicator parameters such as chemical oxygen demand, total organic carbon, nitrate plus nitrite, total phosphorus, total kjeldahl nitrogen, total organic halogens, and ammonia samples are preserved with sulfuric acid ($H_2SO_4$).

- VOC samples are preserved with hydrochloric acid (HCl) or sodium thiosulfate ($Na_2S_2O_3$).

- The remaining samples have no preservative.

Currently, all samples are routinely sent to TestAmerica Laboratories (TAL) in Denver, Colorado, for analysis. TAL provides bottles pre-preserved with HCl, $Na_2S_2O_3$, $HNO_3$, and $H_2SO_4$. In most cases, the preservative should adequately adjust the pH of the sample and no further action is required in the field. As part of its protocol, TAL verifies that the sample pH meets QC criteria when the samples are received and before they are logged in. If the pH is not correct, TAL adds additional preservative. This has no effect on the validity of the sample analysis. TAL records the additional amount of preservative, the manufacturer of the preservative, and the lot number. For VOCs, TAL checks the pH of the samples at the time of analysis to ensure that proper preservation took place. If the pH was not decreased sufficiently, a note is made in the case narrative of the report.

### 2.8.2 Sample Storage and Shipping

Before packing the sample bottles into the shipment coolers, the sampler must record the sample designations in the appropriate place on the FSDS and chain-of-custody (COC) form (see Figure C-2). Sample containers should be placed in an iced cooler (approximately 4°C) immediately after sample collection. Sample containers must be kept closed, maintained under custody, and cooled until the sample is analyzed. Recommended holding times from when samples are collected until sample analysis should not be exceeded (see Table C-1).

To comply with packaging regulations and to take practical measures to prevent damaging samples, the sampling personnel will follow packaging and shipping instructions supplied by TAL. Containers typically are sent by overnight courier to the laboratory. Each shipping container (i.e., sample cooler) will have a unique tracking number. A copy of the shipping manifest will be kept with the field data.

Each shipping container will be closed with a security seal. The COC form for the samples in the container will be placed inside the cooler. On receipt, the laboratory will note on the COC form the condition of the security seal, including any evidence of tampering.

## 2.9 SAMPLING DOCUMENTATION

### 2.9.1 Field Sampling Data Sheet

It is essential that all sampling activities be documented on a FSDS. Entries should be made in indelible ink and changed (if necessary) by crossing out the entry with a single line and initialing it. The data recorded on a FSDS depends on the sampling activity being performed and will include some or all of the following:

- Facility name.

- Date.
- Sampler's name and signature.
- Sample type.
- Sample location identification.
- Weather (ambient temperature, atmospheric pressure, and wind condition).
- Field measurements (water level, pH, temperature, specific conductance, dissolved oxygen, and ORP).
- Field calculations (such as well purge volumes).
- Number, volume, and type of sample containers.
- Condition of the sample location (monitoring well, riser pipe, etc.).
- Any unusual conditions that may affect samples or any deviations from the normal sampling protocol.

### 2.9.2 Chain-of-Custody

To help maintain the integrity of the samples, strict COC procedures will be implemented. These procedures will help ensure that tampering of samples does not occur. The COC form is a manifest of the sample containers and describes the analyses to be performed on the samples in each container. All sample containers will be clearly and unambiguously labeled and COC forms will be completed before the end of each sampling day. A written record of the sample bottle possession and any transfer of the samples must be maintained and documented on the COC record. The COC forms and relevant FSDSs will be sent with the samples to the laboratory. Copies of FSDSs, COC forms, and air bills or shipping manifests will be retained in the site files. A copy of TAL's COC form is shown in Figure C-2[3].

### 2.9.3 Laboratory Sample Handling

On receiving the samples, the laboratory sample custodian will fill out the COC record, noting the condition of each sample container, temperature, date and time received, and, if appropriate, question or comment on sample integrity. The laboratory custodian will also maintain a sample-tracking record that follows each sample through the laboratory process. The sample-tracking record must show the dates of sample extraction or preparation and the designated analysis for each sample. These records will be used to evaluate compliance with specified holding times.

## 2.10 FIELD QUALITY ASSURANCE/QUALITY CONTROL PROCEDURES

Trip blanks, field blanks, equipment blanks, and duplicate samples provide field QA/QC measures for the monitoring program. The field QA/QC measures are discussed below.

### 2.10.1 Trip Blanks

Trip blanks are samples of organic-free deionized water prepared at the laboratory. They are used to detect contamination that may be introduced in the field (either atmospheric or from sampling equipment), in transit (to or from the sampling site), or in the bottle preparation, sample log-in, or sample storage stages at the laboratory. In general, trip blanks are analyzed for each shipping container containing VOC samples.

Trip blanks remain with the sample bottles while in transit to the site, during sampling, and during the return trip to the laboratory. The condition of the trip blanks should be noted on a FSDS. Trip blank sample bottles must not be opened at any time during this process. If a trip blank is opened accidentally, a note must be made on the COC form. On return to the laboratory, trip blanks are analyzed by the same procedures and methods used for the collected field samples. Trip blank results are reported in the laboratory results as separate samples.

### 2.10.2 Field Blanks

Field blanks will be used during the sampling events where appropriate to detect contamination introduced through sampling procedures, external field conditions, sample transportation, container preparation, sample storage, or bias in the analysis process. Field blanks will be prepared in the field by the field sampling personnel. Field blanks will be exposed to the ambient atmosphere at a specified monitoring point during sample collection and may determine the influence of external field conditions on sample integrity. A field blank should be obtained for every 10 samples or at least once each day, whichever is more frequent.

The location where the field blank is prepared must be identified on a FSDS, along with any observations that might help explain anomalous results (e.g., prevailing wind direction, upwind potential sources of contamination). After a field blank is collected, it will be handled and shipped in the same manner as the rest of the samples. Field blank results are reported in the laboratory results as separate samples.

### 2.10.3 Equipment Blanks

Equipment blanks, which are obtained after non-dedicated sampling equipment is decontaminated, involve passing distilled water through the sampling equipment and transferring this water into the appropriate sample container. Equipment blanks will be collected to determine whether sampling

[3] The COC form in Figure C-2 is from TAL, the contract laboratory performing environmental analytical services for RL as of the date of the updated EMP. A COC form by another contract laboratory may be used in the future if comparable information is included.

equipment decontamination is adequate. One equipment blank will be collected during each monitoring event if non-dedicated sampling equipment is used during that monitoring event. Equipment blanks will not be collected if single-use or dedicated sampling equipment is used.

The location where the equipment blank is prepared must be identified on a FSDS, along with any observations that might help explain anomalous results. After collecting an equipment blank, it will be handled and shipped in the same manner as the rest of the samples. The equipment blank results will be reported in the laboratory results as separate samples.

### 2.10.4 Duplicate Samples

A duplicate sample is collected for every 10 samples or at least once per sample day, whichever is more frequent. Duplicate samples are (1) collected using the same protocols, (2) treated identically as the original samples, and (3) submitted blindly to laboratory (i.e., without a sample location designated in the sample identification number). The sampling location at which the duplicate sample is collected must be identified on the FSDS, along with any information or observations that may explain any anomalous results (e.g., physical differences between samples, weather conditions).

# 3.0 LABORATORY ANALYSIS

Environmental samples are analyzed by TAL in Denver, Colorado. The analytical methods to be used for the parameters in the monitoring program are summarized in Tables 3-4, 4-1, and 5-1 of the EMP. All the analytical methods are approved by the U.S Environmental Protection Agency (EPA) as follows: (1) EPA SW-846, Test Methods for Evaluating Solid Waste-Physical/Chemical Methods (EPA, 1986), (2) EPA Methods for Chemical Analysis of Water and Wastes (EPA, 1983), and (3) Standard Methods (SM) for Evaluation of Water and Wastewater (SM, 1992).

## 3.1 QA/QC PROCEDURES

TAL's state of Oregon environmental laboratory accreditation and Quality Assurance Manual (QAM) are provided in Appendix D of the EMP. The QAM contains the laboratory's operating and QA/QC procedures for ensuring analytical data quality and consistency of analytical and reporting procedures and audits. The QAM also describes procedures for implementing corrective measures. The QAM will be reviewed periodically and updated as laboratory procedures change.

As part of the laboratory's standard operating procedures, the following QA/QC checks are performed:

- Calibrate equipment using chemical standards having known concentrations.
- Calculate and review parameter concentrations in method blank samples of ultrapure laboratory water that are not spiked with any analytes. The purpose is to identify potential laboratory contamination. It is assumed that any extraneous field or laboratory sources of contamination would be picked up by and detected in method blank samples. The detection of any analyte in a method blank sample indicates potential laboratory contamination.
- Calculate and review percent recovery of matrix spike (MS) samples having known concentrations. The purpose is to assess laboratory accuracy. Accuracy is how close a laboratory-determined sample concentration is to the true sample concentration. It is assumed that the accuracy values for MS samples of known concentrations can be applied to samples of unknown concentration, since they are analyzed under identical conditions.
- Determine relative percent difference (RPD) between two analyses of MS samples. The purpose is to determine laboratory precision. Precision measures the reproducibility of a sample result and provides a measure of the variability that results from the analytical procedures employed.
- Determine percent recovery of surrogate spikes in each sample analyzed for VOCs.

TAL derives the QC limits for percent recovery and RPD for each analyte on an annual basis. The QC limits are specific to protocol, method, analyte and matrix. In general, the percent recovery range is 75 to 125 percent, with an RPD of 30 percent. The limits are calculated using the recovery data collected for an analyte (per method or matrix) over the previous calendar year.

### 3.1.1 Data Record-Keeping Requirements

The laboratory maintains a record of all analytical data to ensure that at each stage of a process where a permanent data record is required, security measures are in place to guarantee the data's integrity. SOPs are implemented for computer security, computer data storage, and back-up.

# 4.0 REFERENCES

Oregon Department of Environmental Quality (DEQ), 1992, Groundwater monitoring well drilling, construction and decommissioning guidance document, DEQ, August.

Oregon Water Resources Department (OWRD), 1994, Administrative rules for construction and maintenance of monitoring wells and other holes in Oregon, OWRD, January.

Powell, R. M. and R. W. Puls, 1993, Passive sampling of groundwater monitoring wells without purging: multilevel well chemistry and tracer disappearance, Journal of Contaminant Hydrology 12: .51-77.

Puls, R.W., and M. J. Barcelona 1995, EPA groundwater issue, low-flow (minimal drawdown) groundwater sampling procedures, U. S. Environmental Protection Agency, Office of Research and Development, Office of Solid Waste and Emergency Response, EPA/540/S-95/504, December.

Robin, M. L. and R. W. Gillham, 1987, Field evaluation of well purging procedures: Groundwater Monitoring Review 7 (4): 85-93.

Standard Methods, 1992, Standard Methods for Examination of Water and Wastewater, 18th Edition.

U.S. Environmental Protection Agency (EPA), 1983, Methods for Chemical Analysis of Waters and Wastes, EPA 600/4-79-020, March (and subsequent revisions).

U.S. Environmental Protection Agency (EPA), 1986, Test methods for evaluating solid waste: physical/chemical methods, U.S. Environmental Protection Agency, Office of Solid Waste and Emergency Response, EPA-530/SW-846, September (update 1, July 1992; update 2a, August 1993; update 2, September 1994; update 2b, January 1995).

# TABLE

# Table C-1
# Method Descriptions, Volume and Preservation Requirements, and Holding Times
# Riverbend Landfill

| Analytical Method[a] | Method Description | Minimum Sample Volume | Preservative | Analytical Holding Time |
|---|---|---|---|---|
| SM 2540C or EPA MCAWW 160.1 | Total Dissolved Solids | 100 mL | None | 7 days |
| SM 2540D or EPA MCAWW 160.2 | Total Suspended Solids | 1,000 mL | None | 7 days |
| SM 2340C | Hardness (as $CaCO_3$) | 100 mL | None | 180 days |
| SM 5210B | Biological Oxygen Demand | 1,000 mL | None | 48 hours |
| EPA MCAWW 410.4 or EPA SW 9060 | Chemical Oxygen Demand | 100 mL | $H_2S0_4$ | 28 days |
| EPA MCAWW 351.2 | Total Kjeldahl Nitrogen | 100 mL | $H_2S0_4$ | 28 days |
| EPA MCAWW 365.1 | Total Phosphorus | 100 mL | $H_2S0_4$ | 28 days |
| EPA MCAWW 365.1 | Ortho-Phosphate | 100 mL | None | 48 hours |
| EPA SW 9020B | Total Organic Halogens | 100 mL | $H_2S0_4$ | 28 days |
| SM 9223B | Fecal Coliform | 125 mL | Sterile | 6 Hours |
| SM 9223B | E. coli | 125 mL | Sterile | 6 Hours |
| SM 2320B | Total Alkalinity (as $CaCO_3$) | 100 mL | None | 14 days |
| EPA SW 9060 | Total Organic Carbon | 100 mL | $H_2S0_4$ | 28 days |
| EPA SW 9050A | Specific Conductance | 50 mL | None | 28 days |
| EPA SW 9040B | Laboratory pH | 50 mL | None | 24 hours |
| EPA MCAWW 350.1 | Ammonia as Nitrogen | 100 mL | $H_2S0_4$ | 28 days |
| SM 2320B or EPA MCAWW 310.2 | Bicarbonate Alkalinity | 100 mL | None | 14 days |
| SM 2320B or EPA MCAWW 310.2 | Carbonate Alkalinity | 100 mL | None | 14 days |
| EPA MCAWW 300.0 or EPA SW 9038 | Sulfate | 100 mL | None | 14 days |
| EPA MCAWW 300.0 or EPA SW 9251 | Chloride | 100 mL | None | 14 days |
| EPA MCAWW 353.2 or EPA MCAWW 300.0 | Nitrate+Nitrite as Nitrogen | 100 mL | $H_2S0_4$ | 28 days |
| EPA MCAWW 353.2 or EPA MCAWW 300.0 | Nitrate as Nitrogen | 100 mL | None | 48 hours |
| EPA SW 6010B/6020 | Dissolved Metals[b] | 50 mL | $HNO_3$[c] | 180 days |
| EPA SW 6010B/6020 | Total Trace Metals[d] | 50 mL | $HNO_3$ | 180 days |
| EPA SW 6010B/6020 | Dissolved Trace Metals | 50 mL | $HNO_3$[c] | 180 days |
| EPA SW 8260B | GC/MS VOCs | Three 40 mL vials | HCL | 14 days |
| EPA SW 8011 | GC VOCs | Three 40 mL vials | $Na_2S_2O_3$ | 14 days |

NOTE:

SM = Standard Methods (SM) for Examination of Water and Wastewater, 18th edition, 1992.

EPA SW = U.S. Environmental Protection Agency (EPA), Test Methods for Evaluating Solid Waste, Physical/Chemical Methods, third edition, November 1986 and subsequent updates.

EPA MCAWW = EPA, Methods for Chemical Analysis of Water and Wastes, EPA-600/4-79-020, March 1983 and subsequent revisions.

mL = milliliters; $CaCO_3$ = calcium carbonate; GC/MS = gas chromatography/mass spectrometry; VOCs = volatile organic compounds.

Preservatives: $H_2SO_4$ = sulfuric acid; HCL = hydrochloric acid; $HNO_3$ = nitric acid; $Na_2S_2O_3$ = sodium thiosulfate.

[a] Analytical methods listed in this table may be substituted provided that notice is given to the DEQ and that the alternate methods are (1) generally accepted by regulatory authorities, (2) provide technically defensible data, and (3) are appropriate for use on the media being tested.

[b] Dissolved metals includes calcium (Ca), iron, magnesium (Mg), manganese, potassium, and sodium.

[c] Samples collected for dissolved metals and dissolved trace metals should be filtered in the field and collected in a $HNO_3$ preserved bottle.

[d] Total and dissolved trace metals includes antimony, arsenic, barium, beryllium, cadmium, chromium, cobalt, copper, lead, nickel, selenium, silicon, silver, thallium, vanadium, and zinc.

# FIGURES

# FIELD SAMPLING DATA SHEET

**SCS ENGINEERS**
14945 SW Sequoia Parkway, Suite 180
Portland, OR 97224
Office: 503.639.9201 Fax: 503.684.6948

**PROJECT NAME:** Riverbend Landfill **WELL ID:**

**SITE ADDRESS:** McMinnville , Oregon **BLIND ID:**

**DUP ID:** **NA**

| **WIND FROM:** | N | NE | E | SE | S | SW | W | NW | LIGHT | MEDIUM | HEAVY |
|---|---|---|---|---|---|---|---|---|---|---|---|
| **WEATHER:** | SUNNY | | CLOUDY | | RAIN | | ? | | **TEMPERATURE:** | ° F . ° C | |

[Circle appropriate units]

**HYDROLOGY/LEVEL MEASUREMENTS** (Nearest 0.01 ft)

| Date | Time | DT-Bottom | DT-Product | DT-Water | [Product Thickness] DTP-DTW | [Water Column] DTB-DTW | | [Water Column x Gal/ft] Volume (gal) |
|---|---|---|---|---|---|---|---|---|
| / / | : | . | . | . | . | . | X 1 | . |
| / / | : | . | . | . | . | | X 3 | . |

| Gal/ft = (dia.)$^2$ x 0.163 | 1" = 0.041 | 2" = 0.163 | 3" = 0.367 | 4" = 0.653 | 6" = 1.469 | 10" = 4.080 | 12" = 5.875 |
|---|---|---|---|---|---|---|---|

§ METHODS: (A) Submersible Pump (B) Peristaltic Pump (C) Disposable Bailer (D) PVC/Teflon Bailer (E) Dedicated Bailer (F) Dedicated Pump (G) Other =

**GROUNDWATER SAMPLING DATA** (if product is detected, do NOT sample) Sample Depth: [√ if used]

| Bottle Type | Date | Time | Method § | Amount & Volume | Preservative | Ice | Filter | pH | √ |
|---|---|---|---|---|---|---|---|---|---|
| VOA Glass | / / | : | | 40 ml | HCl | YES | NO | | |
| VOA Glass | / / | : | | 40 ml | $Na_2S_2O_3$ | YES | NO | | |
| Amber Glass | / / | : | | 250, 500, 1L | $H_2SO_4$ | YES | NO | | |
| White Poly | / / | : | | 250, 500, 1L | None | YES | NO | NA | |
| Yellow Poly | / / | : | | 250, 500, 1L | $H_2SO_4$ | YES | NO | | |
| Green Poly | / / | : | | 250, 500, 1L | NaOH | YES | NO | | |
| Red Total Poly | / / | : | | 125, 250, 500 | $HNO_3$ | YES | NO | | |
| Red Diss. Poly | / / | : | | 250, 500, 1L | $HNO_3$ | YES | YES | | |
| | / / | : | | 250, 500, 1L | | YES | | | |

White no acid, Yellow H2SO4, Red HNO3 Total Bottles (include duplicate count):

| Analysis Allowed per Bottle Type | BOTTLE TYPE | TYPICAL ANALYSIS ALLOWED PER BOTTLE TYPE (Circle applicable or write non-standard analysis below) |
|---|---|---|
| | VOA - Glass | ( 8260 ) ( 8011 ) OR [ ] WA [ ] |
| | AMBER - Glass | ( 8080 ) ( 8150 ) ( TOX ) OR [ ] WA [ ] |
| | WHITE - Poly | (pH) (Conductivity) (TDS) (TSS) (Alkalinity) ($HCO_3/CO_3$) (Cl) ($SO_4$) (Silica, T.) ($NO_3$) |
| | YELLOW - Glass | (COD) (TOC) ($NH_3$) ($NO_3/NO_2$) (Tannin/Lignin) |
| | GREEN - Poly | (Cyanide) |
| | RED TOTAL - Poly | (As) (Sb) (Ba) (Be) (Cd) (Co) (Cr) (Cu) (Fe) (Pb) (Mn) (Ni) (Ag) (Se) (Tl) (V) (Zn) (Hardness) |
| | RED DISSOLVED - Poly | (Ca) (Fe) (Mg) (Mn) (K) (Na) |

**WATER QUALITY DATA** Purge Start Time: : Pump/Bailer Inlet Depth:

| Meas. | Method § | Purged (gal) | pH | ORP | E Cond (µS) | °F Temp °C | DTW | Diss $O_2$ (mg/l) | Water Quality |
|---|---|---|---|---|---|---|---|---|---|
| 0 | | 0.00 | . | | | . | . | . | |
| 1 | | . | . | | | . | . | . | |
| 2 | | . | . | | | . | . | . | |
| 3 | | . | . | | | . | . | . | |
| 4 | | . | . | | | . | . | . | |
| 5 | | . | . | | | . | . | . | |
| 6 | | | . | | | . | . | . | |

[Casing] [Select A-G] [Cumulative Totals] [Circle units] [Clarity, Color]

**SAMPLER:** _____ _____
(PRINTED NAME) (SIGNATURE)

SCS ENGINEERS
Environmental Consultants and Contractors
14945 SW Sequoia Parkway, Suite 180
Portland, Oregon 97224
(503) 639-9201 FAX: (503) 684-6948

| PROJECT NO. | DES BY |
|---|---|
| 04208022.14 | D.L. |
| SCALE | CHK BY |
| - | D.L. |
| CAD FILE | APP BY |
| FIGURE C-1 | L.C. |

EXAMPLE FIELD SAMPLING DATA SHEET
SAMPLING AND ANALYSIS PLAN
RIVERBEND LANDFILL

DATE: DECEMBER 2014
FIGURE: C-1

# Chain of Custody Record

Sampler ID _____

Temperature on Receipt _____

Drinking Water? Yes ☐ No ☐

TestAmerica
THE LEADER IN ENVIRONMENTAL TESTING

TAL-4124-280 (0508)

| Client | Project Manager | Date | Chain of Custody Number 129306 |
|---|---|---|---|
| Address | Telephone Number (Area Code)/Fax Number | Lab Number | Page _____ of _____ |
| City / State / Zip Code | Site Contact | Lab Contact | Analysis (Attach list if more space is needed) |
| Project Name and Location (State) | Carrier/Waybill Number | | |
| Contract/Purchase Order/Quote No. | Matrix: Air, Aqueous, Sed., Soil | Containers & Preservatives: Unpres., $H_2SO_4$, $HNO_3$, HCl, NaOH, ZnAc/NaOH | Special Instructions/ Conditions of Receipt |

| Sample I.D. No. and Description (Containers for each sample may be combined on one line) | Date | Time | Air | Aqueous | Sed. | Soil | Unpres. | $H_2SO_4$ | $HNO_3$ | HCl | NaOH | ZnAc/NaOH | Analysis | Special Instructions/ Conditions of Receipt |
|---|---|---|---|---|---|---|---|---|---|---|---|---|---|---|
| | | | | | | | | | | | | | | |
| | | | | | | | | | | | | | | |
| | | | | | | | | | | | | | | |
| | | | | | | | | | | | | | | |
| | | | | | | | | | | | | | | |
| | | | | | | | | | | | | | | |
| | | | | | | | | | | | | | | |
| | | | | | | | | | | | | | | |
| | | | | | | | | | | | | | | |
| | | | | | | | | | | | | | | |
| | | | | | | | | | | | | | | |
| | | | | | | | | | | | | | | |

Possible Hazard Identification
☐ Non-Hazard ☐ Flammable ☐ Skin Irritant ☐ Poison B ☐ Unknown

Sample Disposal
☐ Return To Client ☐ Disposal By Lab ☐ Archive For _____ Months
(A fee may be assessed if samples are retained longer than 1 month)

Turn Around Time Required
☐ 24 Hours ☐ 48 Hours ☐ 7 Days ☐ 14 Days ☐ 21 Days ☐ Other_____

QC Requirements (Specify)

| 1. Relinquished By | Date | Time | 1. Received By | Date | Time |
|---|---|---|---|---|---|
| 2. Relinquished By | Date | Time | 2. Received By | Date | Time |
| 3. Relinquished By | Date | Time | 3. Received By | Date | Time |

Comments

**DISTRIBUTION:** WHITE - Returned to Client with Report; CANARY - Stays with the Sample; PINK - Field Copy


SCS ENGINEERS
Environmental Consultants and Contractors
14945 SW Sequoia Parkway, Suite 180
Portland, Oregon 97224
(503) 639-9201 FAX: (503) 684-6948


| PROJECT NO. | DES BY |
|---|---|
| 04208022.14 | D.L. |
| SCALE | CHK BY |
| - | D.L. |
| CAD FILE | APP BY |
| FIGURE C-2 | L.C. |

EXAMPLE CHAIN OF CUSTODY FORM
SAMPLING AND ANALYSIS PLAN

RIVERBEND LANDFILL

DATE
DECEMBER 2014

FIGURE
C-2

# APPENDIX D

## TestAmerica Laboratories, Inc. Oregon Environmental Laboratory Accreditation and Quality Assurance Manual

**TestAmerica Laboratories, Inc.**
**Oregon Environmental Laboratory Accreditation**

© 1995 GOES 2345

# OREGON

## Environmental Laboratory Accreditation Program

NELAP Recognized

**TestAmerica Denver**

**CO200001**

4955 Yarrow Street

Arvada,CO 80002

IS GRANTED APPROVAL BY ORELAP UNDER THE 2009 TNI STANDARDS, TO PERFORM ANALYSES ON ENVIRONMENTAL SAMPLES IN MATRICES AS LISTED BELOW :

| *Air* | *Drinking Water* | *Non Potable Water* | *Solids and Chem. Waste* | *Tissue* |
|---|---|---|---|---|
| | Chemistry | Chemistry | Chemistry | |

AND AS RECORDED IN THE LIST OF APPROVED ANALYTES, METHODS, ANALYTICAL TECHNIQUES, AND FIELDS OF TESTING ISSUED CONCURRENTLY WITH THIS CERTIFICATE AND REVISED AS NECESSARY.

ACCREDITED STATUS DEPENDS ON SUCCESSFUL ONGOING PARTICIPATION IN THE PROGRAM AND CONTINUED COMPLIANCE WITH THE STANDARDS.

CUSTOMERS ARE URGED TO VERIFY THE LABORATORY'S CURRENT ACCREDITATION STATUS IN OREGON.

Gary K. Ward, MS

Oregon State Public Health Laboratory

ORELAP Administrator

3150 NW. 229th Ave, Suite 100

Hillsboro, OR 97124

ISSUE DATE: 01/17/2013

EXPIRATION DATE: 01/16/2014

Certificate No: CO200001 - 009

# Oregon

## Environmental Laboratory Accreditation Program

Department of Agriculture, Laboratory Division
Department of Environmental Quality, Laboratory Division
Oregon Health Authority, Public Health Division

*NELAP Recognized*

## ORELAP Fields of Accreditation

***ORELAP ID:*** CO200001
***EPA CODE:*** CO0026
***Certificate:*** CO200001 - 009

TestAmerica Denver

4955 Yarrow Street
Arvada CO 80002

***Issue Date:*** 01/17/2013 ***Expiration Date:*** 01/16/2014

***As of*** 01/17/2013 ***this list supercedes all previous lists for this certificate number.***
***Customers. Please verify the current accreditation standing with ORELAP.***

NELAP RECOGNIZED
TNI
ACCREDITATION BODY

MATRIX : Drinking Water

| Reference | Code | Description |
|---|---|---|
| **ASTM D516-90** | **30002201** | **Sulfate Ion in Water** |

| *Analyte Code* | *Analyte* |
|---|---|
| 2000 | Sulfate |

| | | |
|---|---|---|
| **EPA 110.2** | **10005604** | **Color - Colorimetric, Pt-Co** |

| *Analyte Code* | *Analyte* |
|---|---|
| 1605 | Color |

| | | |
|---|---|---|
| **EPA 200.7 5** | **10014003** | **ICP - metals** |

| *Analyte Code* | *Analyte* |
|---|---|
| 1000 | Aluminum |
| 1005 | Antimony |
| 1010 | Arsenic |
| 1015 | Barium |
| 1020 | Beryllium |
| 1025 | Boron |
| 1030 | Cadmium |
| 1035 | Calcium |
| 1040 | Chromium |
| 1055 | Copper |
| 1070 | Iron |
| 1075 | Lead |
| 1085 | Magnesium |
| 1090 | Manganese |
| 1100 | Molybdenum |
| 1105 | Nickel |
| 1125 | Potassium |
| 1140 | Selenium |
| 1990 | Silica as SiO2 |
| 1150 | Silver |
| 1155 | Sodium |
| 1185 | Vanadium |
| 1190 | Zinc |

| | | |
|---|---|---|
| **EPA 200.8 5.5** | **10014809** | **Metals by ICP-MS** |

| *Analyte Code* | *Analyte* |
|---|---|
| 1005 | Antimony |
| 1010 | Arsenic |

# ORELAP Fields of Accreditation

***ORELAP ID:*** CO200001
***EPA CODE:*** CO0026
***Certificate:*** CO200001 - 009

TestAmerica Denver

4955 Yarrow Street
Arvada CO 80002

***Issue Date:*** 01/17/2013 ***Expiration Date:*** 01/16/2014

***As of*** 01/17/2013 ***this list supercedes all previous lists for this certificate number.***
***Customers. Please verify the current accreditation standing with ORELAP.***

| *Analyte Code* | *Analyte* |
|---|---|
| 1015 | Barium |
| 1020 | Beryllium |
| 1030 | Cadmium |
| 1040 | Chromium |
| 1055 | Copper |
| 1075 | Lead |
| 1090 | Manganese |
| 1105 | Nickel |
| 1140 | Selenium |
| 1150 | Silver |
| 1165 | Thallium |
| 3035 | Uranium |
| 1185 | Vanadium |
| 1190 | Zinc |

**EPA 245.1 3** **10036609** **Mercury by Cold Vapor Atomic Absorption**

| *Analyte Code* | *Analyte* |
|---|---|
| 1095 | Mercury |

**EPA 300.0** **10053006** **Ion chromatography - anions.**

| *Analyte Code* | *Analyte* |
|---|---|
| 1540 | Bromide |
| 1575 | Chloride |
| 1730 | Fluoride |
| 1810 | Nitrate as N |
| 1840 | Nitrite as N |
| 1870 | Orthophosphate as P |
| 2000 | Sulfate |

**EPA 314.0** **10055400** **Perchlorate in Drinking Water by Ion Chromatography**

| *Analyte Code* | *Analyte* |
|---|---|
| 1895 | Perchlorate |

**EPA 353.2 2** **10067604** **Nitrate/Nitrite Nitrogen - Automated, Cadmium**

| *Analyte Code* | *Analyte* |
|---|---|
| 1810 | Nitrate as N |
| 1820 | Nitrate-nitrite |

**EPA 365.1 2** **10070005** **Phosphorous - Colorimetric, Automated persulfate**

| *Analyte Code* | *Analyte* |
|---|---|
| 1870 | Orthophosphate as P |

**EPA 504.1** **10083008** **EDB/DBCP/TCP micro-extraction, GC/ECD**

| *Analyte Code* | *Analyte* |
|---|---|
| 4570 | 1,2-Dibromo-3-chloropropane (DBCP) |
| 4585 | 1,2-Dibromoethane (EDB, Ethylene dibromide) |

**SM 2120 B 20th ED** **20224004** **Color by Visual Comparison**

| *Analyte Code* | *Analyte* |
|---|---|
| 1605 | Color |

NELAP RECOGNIZED
TNI
ACCREDITATION BODY

# ORELAP Fields of Accreditation

***ORELAP ID:*** CO200001
***EPA CODE:*** CO0026
***Certificate:*** CO200001 - 009

## TestAmerica Denver

4955 Yarrow Street
Arvada CO 80002

***Issue Date:*** 01/17/2013 ***Expiration Date:*** 01/16/2014

***As of*** 01/17/2013 ***this list supercedes all previous lists for this certificate number. Customers. Please verify the current accreditation standing with ORELAP.***

| | | |
|---|---|---|
| **SM 2320 B 20th ED** | **20045209** | **Alkalinity by Titration** |

| *Analyte Code* | *Analyte* |
|---|---|
| 1505 | Alkalinity as CaCO3 |

| | | |
|---|---|---|
| **SM 2340 B 20th ED** | **20046202** | **Hardness by calculation** |

| *Analyte Code* | *Analyte* |
|---|---|
| 1750 | Hardness |

| | | |
|---|---|---|
| **SM 2510 B 20th ED** | **20048208** | **Conductivity by Probe** |

| *Analyte Code* | *Analyte* |
|---|---|
| 1610 | Conductivity |

| | | |
|---|---|---|
| **SM 2540 C 20th ED** | **20050004** | **Total Dissolved Solids** |

| *Analyte Code* | *Analyte* |
|---|---|
| 1955 | Residue-filterable (TDS) |

| | | |
|---|---|---|
| **SM 4500-H+ B 20th ED** | **20104807** | **pH by Probe** |

| *Analyte Code* | *Analyte* |
|---|---|
| 1900 | pH |

| | | |
|---|---|---|
| **SM 4500-NO2⁻ B 20th ED** | **20112601** | **Nitrite by Colorimetric Determination** |

| *Analyte Code* | *Analyte* |
|---|---|
| 1840 | Nitrite as N |

NELAP RECOGNIZED
TNI
ACCREDITATION BODY

# ORELAP Fields of Accreditation

***ORELAP ID:*** CO200001
***EPA CODE:*** CO0026
***Certificate:*** CO200001 - 009

## TestAmerica Denver

4955 Yarrow Street
Arvada CO 80002

***Issue Date:*** 01/17/2013 ***Expiration Date:*** 01/16/2014

***As of*** 01/17/2013 ***this list supercedes all previous lists for this certificate number.***
***Customers. Please verify the current accreditation standing with ORELAP.***

MATRIX : Non-Potable Water

| Reference | Code | Description |
|---|---|---|
| **ASTM D516-90** | **30002201** | **Sulfate Ion in Water** |

| *Analyte Code* | *Analyte* |
|---|---|
| 2000 | Sulfate |

| | | |
|---|---|---|
| **EPA 1010** | **10116606** | **Pensky-Martens Closed-Cup Method for Determining Ignitability** |

| *Analyte Code* | *Analyte* |
|---|---|
| 1780 | Ignitability |

| | | |
|---|---|---|
| **EPA 160.4** | **10010409** | **Total Volatile Solids, ignition @ 550 C** |

| *Analyte Code* | *Analyte* |
|---|---|
| 1970 | Residue-volatile |

| | | |
|---|---|---|
| **EPA 1664A (HEM)** | **10127807** | **N-Hexane Extractable Material (Oil and Grease) by Extraction and Gravimetry** |

| *Analyte Code* | *Analyte* |
|---|---|
| 1803 | n-Hexane Extractable Material (O&G) |
| 1860 | Oil & Grease |

| | | |
|---|---|---|
| **EPA 180.1 2** | **10011800** | **Turbidity - Nephelometric** |

| *Analyte Code* | *Analyte* |
|---|---|
| 2055 | Turbidity |

| | | |
|---|---|---|
| **EPA 200.7 5** | **10014003** | **ICP - metals** |

| *Analyte Code* | *Analyte* |
|---|---|
| 1000 | Aluminum |
| 1005 | Antimony |
| 1010 | Arsenic |
| 1015 | Barium |
| 1020 | Beryllium |
| 1025 | Boron |
| 1030 | Cadmium |
| 1035 | Calcium |
| 1040 | Chromium |
| 1050 | Cobalt |
| 1055 | Copper |
| 1760 | Hardness (calc.) |
| 1070 | Iron |
| 1075 | Lead |
| 1080 | Lithium |
| 1085 | Magnesium |
| 1090 | Manganese |
| 1100 | Molybdenum |
| 1105 | Nickel |
| 1125 | Potassium |
| 1140 | Selenium |
| 1990 | Silica as SiO2 |
| 1150 | Silver |
| 1155 | Sodium |
| 1160 | Strontium |
| 1165 | Thallium |
| 1175 | Tin |
| 1180 | Titanium |
| 1185 | Vanadium |

NELAP RECOGNIZED
ACCREDITATION BODY
TNI

# ORELAP Fields of Accreditation

**ORELAP ID:** CO200001
**EPA CODE:** CO0026
**Certificate:** CO200001 - 009

## TestAmerica Denver

4955 Yarrow Street
Arvada CO 80002

***Issue Date:*** 01/17/2013 ***Expiration Date:*** 01/16/2014

***As of*** 01/17/2013 ***this list supercedes all previous lists for this certificate number.***
***Customers. Please verify the current accreditation standing with ORELAP.***

| *Analyte Code* | *Analyte* |
|---|---|
| 1190 | Zinc |

**EPA 200.8 5.5** **10014809** **Metals by ICP-MS**

| *Analyte Code* | *Analyte* |
|---|---|
| 1005 | Antimony |
| 1010 | Arsenic |
| 1015 | Barium |
| 1020 | Beryllium |
| 1030 | Cadmium |
| 1040 | Chromium |
| 1050 | Cobalt |
| 1055 | Copper |
| 1075 | Lead |
| 1090 | Manganese |
| 1100 | Molybdenum |
| 1105 | Nickel |
| 1140 | Selenium |
| 1150 | Silver |
| 1165 | Thallium |
| 1175 | Tin |
| 3035 | Uranium |
| 1185 | Vanadium |
| 1190 | Zinc |

**EPA 245.1 3** **10036609** **Mercury by Cold Vapor Atomic Absorption**

| *Analyte Code* | *Analyte* |
|---|---|
| 1095 | Mercury |

**EPA 300.0** **10053006** **Ion chromatography - anions.**

| *Analyte Code* | *Analyte* |
|---|---|
| 1540 | Bromide |
| 1575 | Chloride |
| 1730 | Fluoride |
| 1810 | Nitrate as N |
| 1820 | Nitrate-nitrite |
| 1840 | Nitrite as N |
| 1870 | Orthophosphate as P |
| 2000 | Sulfate |

**EPA 3005A** **10133207** **Acid Digestion of waters for Total Recoverable or Dissolved Metals**

| *Analyte Code* | *Analyte* |
|---|---|
| 8031 | Extraction/Preparation |

**EPA 3010A** **10133605** **Acid Digestion of Aqueous samples and Extracts for Total Metals**

| *Analyte Code* | *Analyte* |
|---|---|
| 8031 | Extraction/Preparation |

**EPA 3020A** **10134404** **Acid Digestion of Aqueous samples and Extracts for Total Metals for Analysis by GFAA**

| *Analyte Code* | *Analyte* |
|---|---|
| 8031 | Extraction/Preparation |

**EPA 3050B** **10135601** **Acid Digestion of Sediments, Sludges, and soils**

| *Analyte Code* | *Analyte* |
|---|---|

NELAP RECOGNIZED
TNI
ACCREDITATION BODY

# ORELAP Fields of Accreditation

***ORELAP ID:*** CO200001
***EPA CODE:*** CO0026
***Certificate:*** CO200001 - 009

TestAmerica Denver

4955 Yarrow Street
Arvada CO 80002

***Issue Date:*** 01/17/2013 ***Expiration Date:*** 01/16/2014

***As of*** 01/17/2013 ***this list supercedes all previous lists for this certificate number.***
***Customers. Please verify the current accreditation standing with ORELAP.***

| *Analyte Code* | *Analyte* |
|---|---|
| 8031 | Extraction/Preparation |

**EPA 314** **10055604** **Perchlorate in Drinking Water by Ion Chromatography**

| *Analyte Code* | *Analyte* |
|---|---|
| 1895 | Perchlorate |

**EPA 335.1** **10060001** **Cyanide, amenable to chlorination**

| *Analyte Code* | *Analyte* |
|---|---|
| 1510 | Amenable cyanide |

**EPA 335.4** **10061402** **Methods for the Determination of Inorganic Substances in Environmental Samples**

| *Analyte Code* | *Analyte* |
|---|---|
| 1645 | Total cyanide |

**EPA 350.1 2** **10063602** **Ammonia Nitrogen - Colorimetric, Automated Phenate**

| *Analyte Code* | *Analyte* |
|---|---|
| 1515 | Ammonia as N |

**EPA 351.2 2** **10065404** **Total Kjeldahl Nitrogen - Block Digest, Phenate**

| *Analyte Code* | *Analyte* |
|---|---|
| 1795 | Kjeldahl nitrogen - total |

**EPA 3510C** **10138202** **Separatory Funnel Liquid-liquid extraction**

| *Analyte Code* | *Analyte* |
|---|---|
| 8031 | Extraction/Preparation |

**EPA 3511** **10279808** **Organic Compounds in Water by Microextraction**

| *Analyte Code* | *Analyte* |
|---|---|
| 8031 | Extraction/Preparation |

**EPA 3520C** **10139001** **Continuous Liquid-liquid extraction**

| *Analyte Code* | *Analyte* |
|---|---|
| 8031 | Extraction/Preparation |

**EPA 353.2 2** **10067604** **Nitrate/Nitrite Nitrogen - Automated, Cadmium**

| *Analyte Code* | *Analyte* |
|---|---|
| 1810 | Nitrate as N |
| 1820 | Nitrate-nitrite |

**EPA 3535A** **10139409** **Solid-Phase Extraction (SPE)**

| *Analyte Code* | *Analyte* |
|---|---|
| 8031 | Extraction/Preparation |

**EPA 3620B** **10145809** **Florisil Cleanup**

| *Analyte Code* | *Analyte* |
|---|---|
| 8031 | Extraction/Preparation |

NELAP RECOGNIZED
TNI
ACCREDITATION BODY

# ORELAP Fields of Accreditation

**ORELAP ID:** CO200001
**EPA CODE:** CO0026
**Certificate:** CO200001 - 009

## TestAmerica Denver

4955 Yarrow Street
Arvada CO 80002

***Issue Date:*** 01/17/2013 ***Expiration Date:*** 01/16/2014

***As of*** 01/17/2013 ***this list supercedes all previous lists for this certificate number.***
***Customers. Please verify the current accreditation standing with ORELAP.***

**EPA 3620C** **10146006** **Florisil Cleanup**

| *Analyte Code* | *Analyte* |
|---|---|
| 8031 | Extraction/Preparation |

**EPA 365.1 2** **10070005** **Phosphorous - Colorimetric, Automated persulfate**

| *Analyte Code* | *Analyte* |
|---|---|
| 1870 | Orthophosphate as P |
| 1910 | Phosphorus, total |

**EPA 3665A** **10148808** **Sulfuric Acid / permanganate Cleanup**

| *Analyte Code* | *Analyte* |
|---|---|
| 8031 | Extraction/Preparation |

**EPA 376.2** **10074609** **Sulfide - Colorimetric, Methylene Blue**

| *Analyte Code* | *Analyte* |
|---|---|
| 2005 | Sulfide |

**EPA 410.4 2** **10077404** **Chemical Oxygen Demand - Colorimetric, Automated.**

| *Analyte Code* | *Analyte* |
|---|---|
| 1565 | Chemical oxygen demand |

**EPA 415.1** **10078407** **Organic carbon - Combustion or Oxidation**

| *Analyte Code* | *Analyte* |
|---|---|
| 2040 | Total organic carbon |

**EPA 420.1** **10079400** **Phenolics - Spectrophotometric, manual.**

| *Analyte Code* | *Analyte* |
|---|---|
| 1905 | Total phenolics |

**EPA 420.4** **10080203** **Phenolics, Total Recoverable by Semi-Automated Colorimetry**

| *Analyte Code* | *Analyte* |
|---|---|
| 1905 | Total phenolics |

**EPA 5030B** **10153408** **Purge-and-trap for aqueous samples**

| *Analyte Code* | *Analyte* |
|---|---|
| 8031 | Extraction/Preparation |

**EPA 504.1 1.1** **10082801** **EDB/DBCP/TCP micro-extraction, GC/ECD**

| *Analyte Code* | *Analyte* |
|---|---|
| 4570 | 1,2-Dibromo-3-chloropropane (DBCP) |
| 4585 | 1,2-Dibromoethane (EDB, Ethylene dibromide) |

**EPA 6010B** **10155609** **ICP - AES**

| *Analyte Code* | *Analyte* |
|---|---|
| 1000 | Aluminum |
| 1005 | Antimony |
| 1010 | Arsenic |
| 1015 | Barium |
| 1020 | Beryllium |

NELAP RECOGNIZED
TNI
ACCREDITATION BODY

# ORELAP Fields of Accreditation

***ORELAP ID:*** CO200001
***EPA CODE:*** CO0026
***Certificate:*** CO200001 - 009

TestAmerica Denver

4955 Yarrow Street
Arvada CO 80002

***Issue Date:*** 01/17/2013 ***Expiration Date:*** 01/16/2014

***As of*** 01/17/2013 ***this list supercedes all previous lists for this certificate number. Customers. Please verify the current accreditation standing with ORELAP.***

| *Analyte Code* | *Analyte* |
|---|---|
| 1025 | Boron |
| 1030 | Cadmium |
| 1035 | Calcium |
| 1040 | Chromium |
| 1050 | Cobalt |
| 1055 | Copper |
| 1070 | Iron |
| 1075 | Lead |
| 1080 | Lithium |
| 1085 | Magnesium |
| 1090 | Manganese |
| 1100 | Molybdenum |
| 1105 | Nickel |
| 1910 | Phosphorus, total |
| 1125 | Potassium |
| 1140 | Selenium |
| 1990 | Silica as SiO2 |
| 1145 | Silicon |
| 1150 | Silver |
| 1155 | Sodium |
| 1160 | Strontium |
| 1165 | Thallium |
| 1175 | Tin |
| 1180 | Titanium |
| 1185 | Vanadium |
| 1190 | Zinc |

**EPA 602** **10102202** **Purgeable Aromatics by GC/PID Purge & Trap**

| *Analyte Code* | *Analyte* |
|---|---|
| 4610 | 1,2-Dichlorobenzene |
| 4615 | 1,3-Dichlorobenzene |
| 4620 | 1,4-Dichlorobenzene |
| 4375 | Benzene |
| 4475 | Chlorobenzene |
| 4765 | Ethylbenzene |
| 5000 | Methyl-tert-butyl ether (MTBE) |
| 5140 | Toluene |
| 5260 | Xylene (total) |

**EPA 6020** **10450000** **Inductively Coupled Plasma-Mass Spectrometry**

| *Analyte Code* | *Analyte* |
|---|---|
| 1005 | Antimony |
| 1010 | Arsenic |
| 1015 | Barium |
| 1020 | Beryllium |
| 1030 | Cadmium |
| 1040 | Chromium |
| 1050 | Cobalt |
| 1055 | Copper |
| 1075 | Lead |
| 1090 | Manganese |
| 1100 | Molybdenum |
| 1105 | Nickel |
| 1140 | Selenium |
| 1150 | Silver |
| 1165 | Thallium |
| 1185 | Vanadium |
| 1190 | Zinc |

NELAP RECOGNIZED
TNI
ACCREDITATION BODY

# ORELAP Fields of Accreditation

**ORELAP ID:** CO200001
**EPA CODE:** CO0026
**Certificate:** CO200001 - 009

## TestAmerica Denver

4955 Yarrow Street
Arvada CO 80002

***Issue Date:*** 01/17/2013 ***Expiration Date:*** 01/16/2014

***As of*** 01/17/2013 ***this list supercedes all previous lists for this certificate number.***
***Customers. Please verify the current accreditation standing with ORELAP.***

**EPA 608** **10103603** **Organochlorine Pesticides & PCBs by GC/ECD**

| *Analyte Code* | *Analyte* |
|---|---|
| 7355 | 4,4'-DDD |
| 7360 | 4,4'-DDE |
| 7365 | 4,4'-DDT |
| 7025 | Aldrin |
| 7110 | alpha-BHC (alpha-Hexachlorocyclohexane) |
| 8880 | Aroclor-1016 (PCB-1016) |
| 8885 | Aroclor-1221 (PCB-1221) |
| 8890 | Aroclor-1232 (PCB-1232) |
| 8895 | Aroclor-1242 (PCB-1242) |
| 8900 | Aroclor-1248 (PCB-1248) |
| 8905 | Aroclor-1254 (PCB-1254) |
| 8910 | Aroclor-1260 (PCB-1260) |
| 7115 | beta-BHC (beta-Hexachlorocyclohexane) |
| 7250 | Chlordane (tech.) |
| 7105 | delta-BHC |
| 7470 | Dieldrin |
| 7510 | Endosulfan I |
| 7515 | Endosulfan II |
| 7520 | Endosulfan sulfate |
| 7540 | Endrin |
| 7530 | Endrin aldehyde |
| 7120 | gamma-BHC (Lindane, gamma-Hexachlorocyclohexane) |
| 7685 | Heptachlor |
| 7690 | Heptachlor epoxide |
| 7810 | Methoxychlor |
| 8250 | Toxaphene (Chlorinated camphene) |

**EPA 610 (HPLC)** **10297004** **Polynuclear Hydrocarbons by HPLC/UV-VIS**

| *Analyte Code* | *Analyte* |
|---|---|
| 6380 | 1-Methylnaphthalene |
| 6385 | 2-Methylnaphthalene |
| 5500 | Acenaphthene |
| 5505 | Acenaphthylene |
| 5555 | Anthracene |
| 5575 | Benz(a)anthracene |
| 5580 | Benzo(a)pyrene |
| 5590 | Benzo(g,h,i)perylene |
| 5600 | Benzo(k)fluoranthene |
| 5585 | Benzo[b]fluoranthene |
| 5855 | Chrysene |
| 5895 | Dibenz(a,h) anthracene |
| 6265 | Fluoranthene |
| 6270 | Fluorene |
| 6315 | Indeno(1,2,3-cd) pyrene |
| 5005 | Naphthalene |
| 6615 | Phenanthrene |
| 6665 | Pyrene |

**EPA 614** **10297800** **Organophosphorous Pesticides by Liquid/Liquid Extraction and GC/ECD**

| *Analyte Code* | *Analyte* |
|---|---|
| 7075 | Azinphos-methyl (Guthion) |
| 7410 | Diazinon |
| 8625 | Disulfoton |
| 7770 | Malathion |
| 7825 | Methyl parathion (Parathion, methyl) |
| 7955 | Parathion, ethyl |

NELAC RECOGNIZED ACCREDITATION BODY

# ORELAP Fields of Accreditation

**ORELAP ID:** CO200001
**EPA CODE:** CO0026
**Certificate:** CO200001 - 009

TestAmerica Denver

4955 Yarrow Street
Arvada CO 80002

***Issue Date:*** 01/17/2013 ***Expiration Date:*** 01/16/2014

***As of*** 01/17/2013 ***this list supercedes all previous lists for this certificate number.***
***Customers. Please verify the current accreditation standing with ORELAP.***

**EPA 624** **10107207** **Volatile Organic Compounds by purge and trap GC/MS**

| *Analyte Code* | *Analyte* |
|---|---|
| 5160 | 1,1,1-Trichloroethane |
| 5110 | 1,1,2,2-Tetrachloroethane |
| 5165 | 1,1,2-Trichloroethane |
| 4630 | 1,1-Dichloroethane |
| 4640 | 1,1-Dichloroethylene |
| 4610 | 1,2-Dichlorobenzene |
| 4635 | 1,2-Dichloroethane (Ethylene dichloride) |
| 4655 | 1,2-Dichloropropane |
| 4615 | 1,3-Dichlorobenzene |
| 4620 | 1,4-Dichlorobenzene |
| 4500 | 2-Chloroethyl vinyl ether |
| 4325 | Acrolein (Propenal) |
| 4340 | Acrylonitrile |
| 4375 | Benzene |
| 4395 | Bromodichloromethane |
| 4400 | Bromoform |
| 4455 | Carbon tetrachloride |
| 4475 | Chlorobenzene |
| 4575 | Chlorodibromomethane |
| 4485 | Chloroethane (Ethyl chloride) |
| 4505 | Chloroform |
| 4680 | cis-1,3-Dichloropropene |
| 4765 | Ethylbenzene |
| 4950 | Methyl bromide (Bromomethane) |
| 4960 | Methyl chloride (Chloromethane) |
| 4975 | Methylene chloride (Dichloromethane) |
| 5115 | Tetrachloroethylene (Perchloroethylene) |
| 5140 | Toluene |
| 4700 | trans-1,2-Dichloroethylene |
| 4685 | trans-1,3-Dichloropropylene |
| 5170 | Trichloroethene (Trichloroethylene) |
| 5175 | Trichlorofluoromethane (Fluorotrichloromethane, Freon 11) |
| 5235 | Vinyl chloride |
| 5260 | Xylene (total) |

**EPA 625** **10300002** **Base/Neutrals and Acids by GC/MS**

| *Analyte Code* | *Analyte* |
|---|---|
| 5155 | 1,2,4-Trichlorobenzene |
| 4610 | 1,2-Dichlorobenzene |
| 4615 | 1,3-Dichlorobenzene |
| 4620 | 1,4-Dichlorobenzene |
| 6380 | 1-Methylnaphthalene |
| 6840 | 2,4,6-Trichlorophenol |
| 6000 | 2,4-Dichlorophenol |
| 6130 | 2,4-Dimethylphenol |
| 6175 | 2,4-Dinitrophenol |
| 6185 | 2,4-Dinitrotoluene (2,4-DNT) |
| 6190 | 2,6-Dinitrotoluene (2,6-DNT) |
| 5795 | 2-Chloronaphthalene |
| 5800 | 2-Chlorophenol |
| 6360 | 2-Methyl-4,6-dinitrophenol (4,6-Dinitro-2-methylphenol) |
| 6385 | 2-Methylnaphthalene |
| 6400 | 2-Methylphenol (o-Cresol) |
| 6490 | 2-Nitrophenol |
| 5945 | 3,3'-Dichlorobenzidine |
| 5660 | 4-Bromophenyl phenyl ether |
| 5700 | 4-Chloro-3-methylphenol |

NELAP RECOGNIZED ACCREDITATION BODY

# ORELAP Fields of Accreditation

**ORELAP ID:** CO200001
**EPA CODE:** CO0026
**Certificate:** CO200001 - 009

TestAmerica Denver

4955 Yarrow Street
Arvada CO 80002

***Issue Date:*** 01/17/2013 ***Expiration Date:*** 01/16/2014

***As of*** 01/17/2013 ***this list supercedes all previous lists for this certificate number.***
***Customers. Please verify the current accreditation standing with ORELAP.***

| *Analyte Code* | *Analyte* |
|---|---|
| 5825 | 4-Chlorophenyl phenylether |
| 6410 | 4-Methylphenol (p-Cresol) |
| 6500 | 4-Nitrophenol |
| 5500 | Acenaphthene |
| 5505 | Acenaphthylene |
| 5545 | Aniline |
| 5555 | Anthracene |
| 5595 | Benzidine |
| 5575 | Benzo(a)anthracene |
| 5580 | Benzo(a)pyrene |
| 5590 | Benzo(g,h,i)perylene |
| 5600 | Benzo(k)fluoranthene |
| 5585 | Benzo[b]fluoranthene |
| 5760 | bis(2-Chloroethoxy)methane |
| 5765 | bis(2-Chloroethyl) ether |
| 5780 | bis(2-Chloroisopropyl) ether |
| 5670 | Butyl benzyl phthalate |
| 5680 | Carbazole |
| 5855 | Chrysene |
| 6065 | Di(2-ethylhexyl) phthalate (bis(2-Ethylhexyl)phthalate, DEHP) |
| 5895 | Dibenz(a,h) anthracene |
| 6070 | Diethyl phthalate |
| 6135 | Dimethyl phthalate |
| 5925 | Di-n-butyl phthalate |
| 6200 | Di-n-octyl phthalate |
| 6265 | Fluoranthene |
| 6270 | Fluorene |
| 6275 | Hexachlorobenzene |
| 4835 | Hexachlorobutadiene |
| 6285 | Hexachlorocyclopentadiene |
| 4840 | Hexachloroethane |
| 6315 | Indeno(1,2,3-cd) pyrene |
| 6320 | Isophorone |
| 5005 | Naphthalene |
| 5015 | Nitrobenzene |
| 6530 | n-Nitrosodimethylamine |
| 6545 | n-Nitroso-di-n-propylamine |
| 6535 | n-Nitrosodiphenylamine |
| 6605 | Pentachlorophenol |
| 6615 | Phenanthrene |
| 6625 | Phenol |
| 6665 | Pyrene |

**EPA 6860** **10304800** **Perchlorate in Water, Soils and Solid Wastes Using Ion Chromatography/Electrospray Ionization/Mass Spectrometry**

| *Analyte Code* | *Analyte* |
|---|---|
| 1895 | Perchlorate |

**EPA 7196A** **10162400** **Chromium Hexavalent colorimetric**

| *Analyte Code* | *Analyte* |
|---|---|
| 1045 | Chromium VI |

**EPA 7470A** **10165807** **Mercury in Liquid Waste by Cold Vapor Atomic Absorption**

| *Analyte Code* | *Analyte* |
|---|---|
| 1095 | Mercury |

NELAP RECOGNIZED
TNI
ACCREDITATION BODY

# ORELAP Fields of Accreditation

**ORELAP ID:** CO200001
**EPA CODE:** CO0026
**Certificate:** CO200001 - 009

TestAmerica Denver

4955 Yarrow Street
Arvada CO 80002

***Issue Date:*** 01/17/2013 ***Expiration Date:*** 01/16/2014

***As of*** 01/17/2013 ***this list supercedes all previous lists for this certificate number.***
***Customers. Please verify the current accreditation standing with ORELAP.***

**EPA 8011** **10173009** **1,2-Dibromoethane and 1,2-Dibromo-3-chloropropane by Microextraction and GC/ECD**

| *Analyte Code* | *Analyte* |
|---|---|
| 4585 | 1,2-Dibromoethane (EDB, Ethylene dibromide) |
| 4580 | Dibromochloropropane |

**EPA 8015B** **10173601** **Nonhalogenated organics using GC/FID**

| *Analyte Code* | *Analyte* |
|---|---|
| 9369 | Diesel range organics (DRO) |
| 4750 | Ethanol |
| 9408 | Gasoline range organics (GRO) |
| 4875 | Isobutyl alcohol (2-Methyl-1-propanol) |
| 4930 | Methanol |
| 4425 | n-Butyl alcohol (1-Butanol, n-Butanol) |

**EPA 8021B** **10174808** **Aromatic and Halogenated Volatiles by GC with PID and/or ECD Purge & Trap**

| *Analyte Code* | *Analyte* |
|---|---|
| 4610 | 1,2-Dichlorobenzene |
| 4615 | 1,3-Dichlorobenzene |
| 4620 | 1,4-Dichlorobenzene |
| 4375 | Benzene |
| 4475 | Chlorobenzene |
| 4765 | Ethylbenzene |
| 5240 | m+p-xylene |
| 5000 | Methyl tert-butyl ether (MTBE) |
| 5005 | Naphthalene |
| 5250 | o-Xylene |
| 5140 | Toluene |
| 5260 | Xylene (total) |

**EPA 8081A** **10178606** **Organochlorine Pesticides by GC/ECD**

| *Analyte Code* | *Analyte* |
|---|---|
| 7355 | 4,4'-DDD |
| 7360 | 4,4'-DDE |
| 7365 | 4,4'-DDT |
| 7025 | Aldrin |
| 7110 | alpha-BHC (alpha-Hexachlorocyclohexane) |
| 7240 | alpha-Chlordane |
| 7115 | beta-BHC (beta-Hexachlorocyclohexane) |
| 7250 | Chlordane (tech.) |
| 7260 | Chlorobenzilate |
| 7105 | delta-BHC |
| 7405 | Diallate |
| 7460 | Dicofol |
| 7470 | Dieldrin |
| 7510 | Endosulfan I |
| 7515 | Endosulfan II |
| 7520 | Endosulfan sulfate |
| 7540 | Endrin |
| 7530 | Endrin aldehyde |
| 7535 | Endrin ketone |
| 7120 | gamma-BHC (Lindane, gamma-Hexachlorocyclohexane) |
| 7245 | gamma-Chlordane |
| 7685 | Heptachlor |
| 7690 | Heptachlor epoxide |
| 6275 | Hexachlorobenzene |
| 7725 | Isodrin |
| 7740 | Kepone |

ORELAP RECOGNIZED
TNI
ACCREDITATION BODY

# ORELAP Fields of Accreditation

**ORELAP ID:** CO200001
**EPA CODE:** CO0026
**Certificate:** CO200001 - 009

TestAmerica Denver

4955 Yarrow Street
Arvada CO 80002

***Issue Date:*** 01/17/2013 ***Expiration Date:*** 01/16/2014

***As of*** 01/17/2013 ***this list supercedes all previous lists for this certificate number.***
***Customers. Please verify the current accreditation standing with ORELAP.***

| *Analyte Code* | *Analyte* |
|---|---|
| 7810 | Methoxychlor |
| 7870 | Mirex |
| 8250 | Toxaphene (Chlorinated camphene) |

**EPA 8082** **10179007** **Polychlorinated Biphenyls (PCBs) by GC/ECD**

| *Analyte Code* | *Analyte* |
|---|---|
| 8880 | Aroclor-1016 (PCB-1016) |
| 8885 | Aroclor-1221 (PCB-1221) |
| 8890 | Aroclor-1232 (PCB-1232) |
| 8895 | Aroclor-1242 (PCB-1242) |
| 8900 | Aroclor-1248 (PCB-1248) |
| 8905 | Aroclor-1254 (PCB-1254) |
| 8910 | Aroclor-1260 (PCB-1260) |
| 8912 | Aroclor-1262 (PCB-1262) |
| 8913 | Aroclor-1268 (PCB-1268) |

**EPA 8141A** **10182000** **Organophosphorous Pesticides by GC/NPD**

| *Analyte Code* | *Analyte* |
|---|---|
| 7065 | Atrazine |
| 7070 | Azinphos-ethyl (Ethyl guthion) |
| 7075 | Azinphos-methyl (Guthion) |
| 7125 | Bolstar (Sulprofos) |
| 7220 | Carbophenothion |
| 7300 | Chlorpyrifos |
| 7305 | Chlorpyrifos-methyl |
| 7315 | Coumaphos |
| 7395 | Demeton-o |
| 7385 | Demeton-s |
| 7410 | Diazinon |
| 8610 | Dichlorovos (DDVP, Dichlorvos) |
| 7475 | Dimethoate |
| 8625 | Disulfoton |
| 7550 | EPN |
| 7570 | Ethoprop |
| 7580 | Famphur |
| 7600 | Fensulfothion |
| 7605 | Fenthion |
| 7770 | Malathion |
| 7785 | Merphos |
| 7825 | Methyl parathion (Parathion, methyl) |
| 7850 | Mevinphos |
| 7905 | Naled |
| 7955 | Parathion, ethyl |
| 7985 | Phorate |
| 8000 | Phosmet (Imidan) |
| 8110 | Ronnel |
| 8125 | Simazine |
| 8155 | Sulfotepp |
| 8200 | Tetrachlorvinphos (Stirophos, Gardona) Z-isomer |
| 8235 | Thionazin (Zinophos) |
| 8245 | Tokuthion (Prothiophos) |
| 8275 | Trichloronate |

**EPA 8151A** **10183207** **Chlorinated Herbicides by GC/ECD**

| *Analyte Code* | *Analyte* |
|---|---|
| 8655 | 2,4,5-T |
| 8545 | 2,4-D |

NELAC RECOGNIZED TNI ACCREDITATION BODY

TestAmerica Denver

4955 Yarrow Street
Arvada CO 80002


***Issue Date:*** 01/17/2013 ***Expiration Date:*** 01/16/2014

***As of*** 01/17/2013 ***this list supercedes all previous lists for this certificate number.***
***Customers. Please verify the current accreditation standing with ORELAP.***

| *Analyte Code* | *Analyte* |
|---|---|
| 8560 | 2,4-DB |
| 8555 | Dalapon |
| 8595 | Dicamba |
| 8605 | Dichloroprop (Dichlorprop) |
| 8620 | Dinoseb (2-sec-butyl-4,6-dinitrophenol, DNBP) |
| 7775 | MCPA |
| 7780 | MCPP |
| 8645 | Picloram |
| 8650 | Silvex (2,4,5-TP) |

**EPA 8260B** **10184802** **Volatile Organic Compounds by purge and trap GC/MS**

| *Analyte Code* | *Analyte* |
|---|---|
| 5105 | 1,1,1,2-Tetrachloroethane |
| 5160 | 1,1,1-Trichloroethane |
| 5110 | 1,1,2,2-Tetrachloroethane |
| 5195 | 1,1,2-Trichloro-1,2,2-trifluoroethane (Freon 113) |
| 5165 | 1,1,2-Trichloroethane |
| 4630 | 1,1-Dichloroethane |
| 4640 | 1,1-Dichloroethylene |
| 4670 | 1,1-Dichloropropene |
| 5150 | 1,2,3-Trichlorobenzene |
| 5180 | 1,2,3-Trichloropropane |
| 5155 | 1,2,4-Trichlorobenzene |
| 5210 | 1,2,4-Trimethylbenzene |
| 4570 | 1,2-Dibromo-3-chloropropane (DBCP) |
| 4585 | 1,2-Dibromoethane (EDB, Ethylene dibromide) |
| 4610 | 1,2-Dichlorobenzene |
| 4635 | 1,2-Dichloroethane (Ethylene dichloride) |
| 4655 | 1,2-Dichloropropane |
| 5215 | 1,3,5-Trimethylbenzene |
| 4615 | 1,3-Dichlorobenzene |
| 4660 | 1,3-Dichloropropane |
| 4620 | 1,4-Dichlorobenzene |
| 4735 | 1,4-Dioxane (1,4- Diethyleneoxide) |
| 4510 | 1-Chlorohexane |
| 4665 | 2,2-Dichloropropane |
| 4410 | 2-Butanone (Methyl ethyl ketone, MEK) |
| 4500 | 2-Chloroethyl vinyl ether |
| 4535 | 2-Chlorotoluene |
| 4860 | 2-Hexanone |
| 5020 | 2-Nitropropane |
| 5045 | 2-Pentanone |
| 4540 | 4-Chlorotoluene |
| 4910 | 4-Isopropyltoluene (p-Cymene) |
| 4995 | 4-Methyl-2-pentanone (MIBK) |
| 4315 | Acetone |
| 4320 | Acetonitrile |
| 4325 | Acrolein (Propenal) |
| 4340 | Acrylonitrile |
| 4355 | Allyl chloride (3-Chloropropene) |
| 4375 | Benzene |
| 4385 | Bromobenzene |
| 4390 | Bromochloromethane |
| 4395 | Bromodichloromethane |
| 4400 | Bromoform |
| 4450 | Carbon disulfide |
| 4455 | Carbon tetrachloride |
| 4475 | Chlorobenzene |
| 4575 | Chlorodibromomethane |
| 4485 | Chloroethane (Ethyl chloride) |


ORELAP RECOGNIZED ACCREDITATION BODY TNI

# ORELAP Fields of Accreditation

**ORELAP ID:** CO200001
**EPA CODE:** CO0026
**Certificate:** CO200001 - 009

## TestAmerica Denver

4955 Yarrow Street
Arvada CO 80002

***Issue Date:*** 01/17/2013 ***Expiration Date:*** 01/16/2014

***As of*** 01/17/2013 ***this list supercedes all previous lists for this certificate number.***
***Customers. Please verify the current accreditation standing with ORELAP.***

| *Analyte Code* | *Analyte* |
|---|---|
| 4505 | Chloroform |
| 4525 | Chloroprene (2-Chloro-1,3-butadiene) |
| 4645 | cis-1,2-Dichloroethylene |
| 4680 | cis-1,3-Dichloropropene |
| 4600 | cis-1,4-Dichloro-2-butene |
| 4595 | Dibromomethane (Methylene bromide) |
| 4625 | Dichlorodifluoromethane (Freon 12) |
| 4725 | Diethyl ether |
| 9375 | Di-isopropylether (DIPE) |
| 4750 | Ethanol |
| 4755 | Ethyl acetate |
| 4810 | Ethyl methacrylate |
| 4765 | Ethylbenzene |
| 4795 | Ethylene oxide |
| 4835 | Hexachlorobutadiene |
| 4870 | Iodomethane (Methyl iodide) |
| 4875 | Isobutyl alcohol (2-Methyl-1-propanol) |
| 4895 | Isopropyl alcohol (2-Propanol, Isopropanol) |
| 4900 | Isopropylbenzene |
| 5240 | m+p-xylene |
| 4925 | Methacrylonitrile |
| 4950 | Methyl bromide (Bromomethane) |
| 4960 | Methyl chloride (Chloromethane) |
| 4990 | Methyl methacrylate |
| 5000 | Methyl tert-butyl ether (MTBE) |
| 4975 | Methylene chloride (Dichloromethane) |
| 5245 | m-Xylene |
| 5005 | Naphthalene |
| 4425 | n-Butyl alcohol (1-Butanol, n-Butanol) |
| 4435 | n-Butylbenzene |
| 5090 | n-Propylbenzene |
| 5250 | o-Xylene |
| 5080 | Propionitrile (Ethyl cyanide) |
| 5255 | p-Xylene |
| 4440 | sec-Butylbenzene |
| 5100 | Styrene |
| 4420 | tert-Butyl alcohol |
| 4445 | tert-Butylbenzene |
| 5115 | Tetrachloroethylene (Perchloroethylene) |
| 5140 | Toluene |
| 4700 | trans-1,2-Dichloroethylene |
| 4685 | trans-1,3-Dichloropropylene |
| 4605 | trans-1,4-Dichloro-2-butene |
| 5170 | Trichloroethene (Trichloroethylene) |
| 5175 | Trichlorofluoromethane (Fluorotrichloromethane, Freon 11) |
| 5225 | Vinyl acetate |
| 5235 | Vinyl chloride |
| 5260 | Xylene (total) |

**EPA 8270C** **10185805** **Semivolatile Organic compounds by GC/MS**

| *Analyte Code* | *Analyte* |
|---|---|
| 6715 | 1,2,4,5-Tetrachlorobenzene |
| 5155 | 1,2,4-Trichlorobenzene |
| 4610 | 1,2-Dichlorobenzene |
| 6221 | 1,2-Diphenylhydrazine |
| 6885 | 1,3,5-Trinitrobenzene (1,3,5-TNB) |
| 4615 | 1,3-Dichlorobenzene |
| 6160 | 1,3-Dinitrobenzene (1,3-DNB) |
| 4620 | 1,4-Dichlorobenzene |
| 6165 | 1,4-Dinitrobenzene |

NELAP RECOGNIZED
TNI
ACCREDITATION BODY

# ORELAP Fields of Accreditation

**ORELAP ID:** CO200001
**EPA CODE:** CO0026
**Certificate:** CO200001 - 009

## TestAmerica Denver

4955 Yarrow Street
Arvada CO 80002

***Issue Date:*** 01/17/2013 ***Expiration Date:*** 01/16/2014

***As of*** 01/17/2013 ***this list supercedes all previous lists for this certificate number.***
***Customers. Please verify the current accreditation standing with ORELAP.***

| *Analyte Code* | *Analyte* |
|---|---|
| 6420 | 1,4-Naphthoquinone |
| 5790 | 1-Chloronaphthalene |
| 6380 | 1-Methylnaphthalene |
| 6425 | 1-Naphthylamine |
| 6735 | 2,3,4,6-Tetrachlorophenol |
| 6835 | 2,4,5-Trichlorophenol |
| 6840 | 2,4,6-Trichlorophenol |
| 6000 | 2,4-Dichlorophenol |
| 6130 | 2,4-Dimethylphenol |
| 6175 | 2,4-Dinitrophenol |
| 6185 | 2,4-Dinitrotoluene (2,4-DNT) |
| 6005 | 2,6-Dichlorophenol |
| 6190 | 2,6-Dinitrotoluene (2,6-DNT) |
| 5515 | 2-Acetylaminofluorene |
| 5735 | 2-Chloroaniline |
| 5795 | 2-Chloronaphthalene |
| 5800 | 2-Chlorophenol |
| 6360 | 2-Methyl-4,6-dinitrophenol (4,6-Dinitro-2-methylphenol) |
| 5145 | 2-Methylaniline (o-Toluidine) |
| 6385 | 2-Methylnaphthalene |
| 6400 | 2-Methylphenol (o-Cresol) |
| 6430 | 2-Naphthylamine |
| 6460 | 2-Nitroaniline |
| 6490 | 2-Nitrophenol |
| 5050 | 2-Picoline (2-Methylpyridine) |
| 5945 | 3,3'-Dichlorobenzidine |
| 6120 | 3,3'-Dimethylbenzidine |
| 6355 | 3-Methylcholanthrene |
| 6405 | 3-Methylphenol (m-Cresol) |
| 6465 | 3-Nitroaniline |
| 5540 | 4-Aminobiphenyl |
| 5660 | 4-Bromophenyl phenyl ether |
| 5700 | 4-Chloro-3-methylphenol |
| 5745 | 4-Chloroaniline |
| 5825 | 4-Chlorophenyl phenylether |
| 6105 | 4-Dimethyl aminoazobenzene |
| 6410 | 4-Methylphenol (p-Cresol) |
| 6470 | 4-Nitroaniline |
| 6500 | 4-Nitrophenol |
| 6570 | 5-Nitro-o-toluidine |
| 6115 | 7,12-Dimethylbenz(a) anthracene |
| 6125 | a-a-Dimethylphenethylamine |
| 5500 | Acenaphthene |
| 5505 | Acenaphthylene |
| 5510 | Acetophenone |
| 5545 | Aniline |
| 5555 | Anthracene |
| 5560 | Aramite |
| 5595 | Benzidine |
| 5575 | Benzo(a)anthracene |
| 5580 | Benzo(a)pyrene |
| 5590 | Benzo(g,h,i)perylene |
| 5600 | Benzo(k)fluoranthene |
| 5585 | Benzo[b]fluoranthene |
| 5610 | Benzoic acid |
| 5630 | Benzyl alcohol |
| 5760 | bis(2-Chloroethoxy)methane |
| 5765 | bis(2-Chloroethyl) ether |
| 5780 | bis(2-Chloroisopropyl) ether |
| 5670 | Butyl benzyl phthalate |
| 5680 | Carbazole |

NELAP RECOGNIZED
TNI
ACCREDITATION BODY

# ORELAP Fields of Accreditation

**ORELAP ID:** CO200001
**EPA CODE:** CO0026
**Certificate:** CO200001 - 009

TestAmerica Denver

4955 Yarrow Street
Arvada CO 80002

***Issue Date:*** 01/17/2013 ***Expiration Date:*** 01/16/2014

***As of*** 01/17/2013 ***this list supercedes all previous lists for this certificate number.***
***Customers. Please verify the current accreditation standing with ORELAP.***

| *Analyte Code* | *Analyte* |
|---|---|
| 7260 | Chlorobenzilate |
| 5855 | Chrysene |
| 6065 | Di(2-ethylhexyl) phthalate (bis(2-Ethylhexyl)phthalate, DEHP) |
| 7405 | Diallate |
| 5900 | Dibenz(a, j) acridine |
| 5895 | Dibenz(a,h) anthracene |
| 5905 | Dibenzofuran |
| 6070 | Diethyl phthalate |
| 7475 | Dimethoate |
| 6135 | Dimethyl phthalate |
| 5925 | Di-n-butyl phthalate |
| 6200 | Di-n-octyl phthalate |
| 8620 | Dinoseb (2-sec-butyl-4,6-dinitrophenol, DNBP) |
| 8625 | Disulfoton |
| 6260 | Ethyl methanesulfonate |
| 7580 | Famphur |
| 6265 | Fluoranthene |
| 6270 | Fluorene |
| 6275 | Hexachlorobenzene |
| 4835 | Hexachlorobutadiene |
| 6285 | Hexachlorocyclopentadiene |
| 4840 | Hexachloroethane |
| 6295 | Hexachloropropene |
| 6315 | Indeno(1,2,3-cd) pyrene |
| 7725 | Isodrin |
| 6320 | Isophorone |
| 6325 | Isosafrole |
| 6345 | Methapyrilene |
| 6375 | Methyl methanesulfonate |
| 7825 | Methyl parathion (Parathion, methyl) |
| 5005 | Naphthalene |
| 5015 | Nitrobenzene |
| 6525 | n-Nitrosodiethylamine |
| 6530 | n-Nitrosodimethylamine |
| 5025 | n-Nitroso-di-n-butylamine |
| 6545 | n-Nitrosodi-n-propylamine |
| 6535 | n-Nitrosodiphenylamine |
| 6550 | n-Nitrosomethylethalamine |
| 6555 | n-Nitrosomorpholine |
| 6560 | n-Nitrosopiperidine |
| 6565 | n-Nitrosopyrrolidine |
| 8290 | o,o,o-Triethyl phosphorothioate |
| 7955 | Parathion, ethyl |
| 6590 | Pentachlorobenzene |
| 6600 | Pentachloronitrobenzene |
| 6605 | Pentachlorophenol |
| 6610 | Phenacetin |
| 6615 | Phenanthrene |
| 6625 | Phenol |
| 7985 | Phorate |
| 6640 | Phthalic anhydride |
| 6650 | Pronamide (Kerb) |
| 6665 | Pyrene |
| 5095 | Pyridine |
| 6685 | Safrole |
| 8155 | Sulfotepp |
| 8235 | Thionazin (Zinophos) |
| 6750 | Thiophenol (Benzenethiol) |
| 8310 | tris-(2,3-Dibromopropyl) phosphate (tris-BP) |

NELAP RECOGNIZED
TNI
ACCREDITATION BODY

# ORELAP Fields of Accreditation

***ORELAP ID:*** CO200001
***EPA CODE:*** CO0026
***Certificate:*** CO200001 - 009

## TestAmerica Denver

4955 Yarrow Street
Arvada CO 80002

***Issue Date:*** 01/17/2013 ***Expiration Date:*** 01/16/2014

***As of*** 01/17/2013 ***this list supercedes all previous lists for this certificate number.***
***Customers. Please verify the current accreditation standing with ORELAP.***

**EPA 8270C SIM** **10242407** **Semivolatile Organic compounds by GC/MS Selective Ion Monitoring**

| *Analyte Code* | *Analyte* |
|---|---|
| 6380 | 1-Methylnaphthalene |
| 6385 | 2-Methylnaphthalene |
| 5500 | Acenaphthene |
| 5505 | Acenaphthylene |
| 5555 | Anthracene |
| 5575 | Benzo(a)anthracene |
| 5580 | Benzo(a)pyrene |
| 5590 | Benzo(g,h,i)perylene |
| 5600 | Benzo(k)fluoranthene |
| 5585 | Benzo[b]fluoranthene |
| 5670 | Butyl benzyl phthalate |
| 5855 | Chrysene |
| 5895 | Dibenz(a,h) anthracene |
| 5905 | Dibenzofuran |
| 6070 | Diethyl phthalate |
| 6135 | Dimethyl phthalate |
| 5925 | Di-n-butyl phthalate |
| 6200 | Di-n-octyl phthalate |
| 6265 | Fluoranthene |
| 6270 | Fluorene |
| 6275 | Hexachlorobenzene |
| 4835 | Hexachlorobutadiene |
| 6315 | Indeno(1,2,3-cd) pyrene |
| 5005 | Naphthalene |
| 6615 | Phenanthrene |
| 6665 | Pyrene |

**EPA 8310** **10187607** **Polynuclear Aromatic Hydrocarbons by HPLC/UV-VIS**

| *Analyte Code* | *Analyte* |
|---|---|
| 6380 | 1-Methylnaphthalene |
| 5500 | Acenaphthene |
| 5505 | Acenaphthylene |
| 5555 | Anthracene |
| 5575 | Benzo(a)anthracene |
| 5580 | Benzo(a)pyrene |
| 5590 | Benzo(g,h,i)perylene |
| 5600 | Benzo(k)fluoranthene |
| 5585 | Benzo[b]fluoranthene |
| 5855 | Chrysene |
| 5895 | Dibenz(a,h) anthracene |
| 6265 | Fluoranthene |
| 6270 | Fluorene |
| 6315 | Indeno(1,2,3-cd) pyrene |
| 5005 | Naphthalene |
| 6615 | Phenanthrene |
| 6665 | Pyrene |

**EPA 8321A** **10189001** **Solvent Extractable non-volatile compounds by HPLC/TS/MS**

| *Analyte Code* | *Analyte* |
|---|---|
| 8555 | Dalapon |
| 8595 | Dicamba |
| 8605 | Dichloroprop (Dichlorprop) |
| 8620 | Dinoseb (2-sec-butyl-4,6-dinitrophenol, DNBP) |
| 7775 | MCPA |
| 7780 | MCPP |
| 8650 | Silvex (2,4,5-TP) |

NELAP RECOGNIZED
TNI ACCREDITATION BODY

# ORELAP Fields of Accreditation

***ORELAP ID:*** CO200001
***EPA CODE:*** CO0026
***Certificate:*** CO200001 - 009

## TestAmerica Denver

4955 Yarrow Street
Arvada CO 80002

***Issue Date:*** 01/17/2013 ***Expiration Date:*** 01/16/2014

***As of*** 01/17/2013 ***this list supercedes all previous lists for this certificate number.***
***Customers. Please verify the current accreditation standing with ORELAP.***

**EPA 8330** **10189807** **Nitroaromatics and Nitramines by HPLC/UV-VIS**

| *Analyte Code* | *Analyte* |
|---|---|
| 6885 | 1,3,5-Trinitrobenzene (1,3,5-TNB) |
| 6160 | 1,3-Dinitrobenzene (1,3-DNB) |
| 9651 | 2,4,6-Trinitrotoluene (2,4,6-TNT) |
| 6185 | 2,4-Dinitrotoluene (2,4-DNT) |
| 6190 | 2,6-Dinitrotoluene (2,6-DNT) |
| 9303 | 2-Amino-4,6-dinitrotoluene (2-am-dnt) |
| 9507 | 2-Nitrotoluene |
| 9510 | 3-Nitrotoluene |
| 9306 | 4-Amino-2,6-dinitrotoluene (4-am-dnt) |
| 9513 | 4-Nitrotoluene |
| 6415 | Methyl-2,4,6-trinitrophenylnitramine (tetryl) |
| 5015 | Nitrobenzene |
| 6485 | Nitroglycerin |
| 9522 | Octahydro-1,3,5,7-tetranitro-1,3,5,7-tetrazocine (HMX) |
| 9558 | Pentaerythritoltetranitrate |
| 9432 | RDX (hexahydro-1,3,5-trinitro-1,3,5-triazine) |

**EPA 8330A** **10190008** **Nitroaromatics and Nitramines by High Performance Liquid Chromatography (HPLC)**

| *Analyte Code* | *Analyte* |
|---|---|
| 6885 | 1,3,5-Trinitrobenzene (1,3,5-TNB) |
| 6160 | 1,3-Dinitrobenzene (1,3-DNB) |
| 9651 | 2,4,6-Trinitrotoluene (2,4,6-TNT) |
| 6185 | 2,4-Dinitrotoluene (2,4-DNT) |
| 6190 | 2,6-Dinitrotoluene (2,6-DNT) |
| 9303 | 2-Amino-4,6-dinitrotoluene (2-am-dnt) |
| 9507 | 2-Nitrotoluene |
| 9510 | 3-Nitrotoluene |
| 9306 | 4-Amino-2,6-dinitrotoluene (4-am-dnt) |
| 9513 | 4-Nitrotoluene |
| 6415 | Methyl-2,4,6-trinitrophenylnitramine (tetryl) |
| 5015 | Nitrobenzene |
| 6485 | Nitroglycerin |
| 9522 | Octahydro-1,3,5,7-tetranitro-1,3,5,7-tetrazocine (HMX) |
| 9558 | Pentaerythritoltetranitrate |
| 9432 | RDX (hexahydro-1,3,5-trinitro-1,3,5-triazine) |

**EPA 8330B** **10308006** **Nitroaromatics, Nitramines and Nitrate Esters by High Performance Liquid Chromatography (HPLC)**

| *Analyte Code* | *Analyte* |
|---|---|
| 6885 | 1,3,5-Trinitrobenzene (1,3,5-TNB) |
| 6160 | 1,3-Dinitrobenzene (1,3-DNB) |
| 9651 | 2,4,6-Trinitrotoluene (2,4,6-TNT) |
| 6185 | 2,4-Dinitrotoluene (2,4-DNT) |
| 6190 | 2,6-Dinitrotoluene (2,6-DNT) |
| 9303 | 2-Amino-4,6-dinitrotoluene (2-am-dnt) |
| 9507 | 2-Nitrotoluene |
| 9510 | 3-Nitrotoluene |
| 9306 | 4-Amino-2,6-dinitrotoluene (4-am-dnt) |
| 9513 | 4-Nitrotoluene |
| 6415 | Methyl-2,4,6-trinitrophenylnitramine (tetryl) |
| 5015 | Nitrobenzene |
| 6485 | Nitroglycerin |
| 9522 | Octahydro-1,3,5,7-tetranitro-1,3,5,7-tetrazocine (HMX) |
| 9558 | Pentaerythritoltetranitrate |
| 9432 | RDX (hexahydro-1,3,5-trinitro-1,3,5-triazine) |

NELAP RECOGNIZED ACCREDITATION BODY TNI

# ORELAP Fields of Accreditation

**ORELAP ID:** CO200001
**EPA CODE:** CO0026
**Certificate:** CO200001 - 009

## TestAmerica Denver

4955 Yarrow Street
Arvada CO 80002

***Issue Date:*** 01/17/2013 ***Expiration Date:*** 01/16/2014

***As of*** 01/17/2013 ***this list supercedes all previous lists for this certificate number.***
***Customers. Please verify the current accreditation standing with ORELAP.***

**EPA 9012A** **10193405** **Total and Amenable Cyanide (automated colorimetric with off-line distillation)**

| *Analyte Code* | *Analyte* |
|---|---|
| 1645 | Total cyanide |

**EPA 9020B** **10194408** **Total Organic Halides**

| *Analyte Code* | *Analyte* |
|---|---|
| 2045 | Total organic halides (TOX) |

**EPA 9030B** **10195605** **Acid-Soluble and Acid-Insoluble sulfides: Distillation**

| *Analyte Code* | *Analyte* |
|---|---|
| 2005 | Sulfide |

**EPA 9034** **10196006** **Titrimetric Procedure for Acid-Soluble and Acid-Insoluble Sulfides**

| *Analyte Code* | *Analyte* |
|---|---|
| 2005 | Sulfide |

**EPA 9038** **10196608** **Sulfate (Turbidimetric)**

| *Analyte Code* | *Analyte* |
|---|---|
| 2000 | Sulfate |

**EPA 9040B** **10197203** **pH Electrometric Measurement**

| *Analyte Code* | *Analyte* |
|---|---|
| 1900 | pH |

**EPA 9040C** **10244403** **pH Electrometric Measurement**

| *Analyte Code* | *Analyte* |
|---|---|
| 1900 | pH |

**EPA 9050A** **10198808** **Specific Conductance**

| *Analyte Code* | *Analyte* |
|---|---|
| 1610 | Conductivity |

**EPA 9056A** **10199307** **Determination of Inorganic Anions by Ion Chromatography**

| *Analyte Code* | *Analyte* |
|---|---|
| 1540 | Bromide |
| 1575 | Chloride |
| 1730 | Fluoride |
| 1805 | Nitrate |
| 1820 | Nitrate-nitrite |
| 1835 | Nitrite |
| 1870 | Orthophosphate as P |
| 2000 | Sulfate |

**EPA 9060** **10200201** **Total Organic Carbon**

| *Analyte Code* | *Analyte* |
|---|---|
| 2040 | Total organic carbon |

**EPA 9066** **10200609** **Phenolics (Colorimetric, Automated 4-AAP with Distillation)**

| *Analyte Code* | *Analyte* |
|---|---|

NELAP RECOGNIZED
ACCREDITATION BODY

# ORELAP Fields of Accreditation

***ORELAP ID:*** CO200001
***EPA CODE:*** CO0026
***Certificate:*** CO200001 - 009

## TestAmerica Denver

4955 Yarrow Street
Arvada CO 80002

***Issue Date:*** 01/17/2013 ***Expiration Date:*** 01/16/2014

***As of*** 01/17/2013 ***this list supercedes all previous lists for this certificate number.***
***Customers. Please verify the current accreditation standing with ORELAP.***

| *Analyte Code* | *Analyte* |
|---|---|
| 1905 | Total phenolics |

**EPA 9251** **10207406** **Chloride (Colorimetric, Automated Ferricyanide AAII)**

| *Analyte Code* | *Analyte* |
|---|---|
| 1575 | Chloride |

**EPA RSK-175 (GC-TCD)** **10210858** **Fixed Gases in water by Headspace GC/TCD**

| *Analyte Code* | *Analyte* |
|---|---|
| 4323 | Acetylene |
| 4747 | Ethane |
| 4752 | Ethene |
| 4926 | Methane |

**SM 2120 B 20th ED** **20224004** **Color by Visual Comparison**

| *Analyte Code* | *Analyte* |
|---|---|
| 1605 | Color |

**SM 2310 B 20th ED** **20044206** **Acidity by Titration**

| *Analyte Code* | *Analyte* |
|---|---|
| 1500 | Acidity, as CaCO3 |

**SM 2320 B 20th ED** **20045209** **Alkalinity by Titration**

| *Analyte Code* | *Analyte* |
|---|---|
| 1505 | Alkalinity as CaCO3 |

**SM 2340 B 20th ED** **20046202** **Hardness by calculation**

| *Analyte Code* | *Analyte* |
|---|---|
| 1750 | Hardness |

**SM 2340 C 20th ED** **20047205** **Hardness by EDTA Titration**

| *Analyte Code* | *Analyte* |
|---|---|
| 1750 | Hardness |

**SM 2510 B 20th ED** **20048203** **Conductivity by Probe**

| *Analyte Code* | *Analyte* |
|---|---|
| 1610 | Conductivity |

**SM 2540 B 20th ED** **20049007** **Total Solids**

| *Analyte Code* | *Analyte* |
|---|---|
| 1950 | Residue-total |

**SM 2540 C 20th ED** **20050004** **Total Dissolved Solids**

| *Analyte Code* | *Analyte* |
|---|---|
| 1955 | Residue-filterable (TDS) |

**SM 2540 D 20th ED** **20050800** **Total Suspended Solids**

| *Analyte Code* | *Analyte* |
|---|---|
| 1960 | Residue-nonfilterable (TSS) |

NELAP RECOGNIZED
TNI
ACCREDITATION BODY

# ORELAP Fields of Accreditation

***ORELAP ID:*** CO200001
***EPA CODE:*** CO0026
***Certificate:*** CO200001 - 009

TestAmerica Denver

4955 Yarrow Street
Arvada CO 80002

***Issue Date:*** 01/17/2013 ***Expiration Date:*** 01/16/2014

***As of*** 01/17/2013 ***this list supercedes all previous lists for this certificate number.***
***Customers. Please verify the current accreditation standing with ORELAP.***

**SM 2540 E 20th ED** **20051654** **Total Volatile Solids**

| *Analyte Code* | *Analyte* |
|---|---|
| 1725 | Total, fixed, and volatile residue |

**SM 2540 F 20th ED** **20051803** **Settleable Solids**

| *Analyte Code* | *Analyte* |
|---|---|
| 1965 | Residue-settleable |

**SM 3500-Cr B 20th ED** **20065809** **Chromium by Colorimetric Method**

| *Analyte Code* | *Analyte* |
|---|---|
| 1045 | Chromium VI |

**SM 3500-Fe B 20th ED** **20068604** **Iron by Colorimetric Method**

| *Analyte Code* | *Analyte* |
|---|---|
| 1070 | Iron |

**SM 3500-Fe D 19th ED** **20069209** **Iron by Phenanthroline Method**

| *Analyte Code* | *Analyte* |
|---|---|
| 1070 | Iron |

**SM 4500-Cl E 20th ED** **20080211** **Chloride by Automated Ferricyanide Method**

| *Analyte Code* | *Analyte* |
|---|---|
| 1575 | Chloride |

**SM 4500-CN G 20th ED** **20093203** **Cyanide Amenable to Chlorination after Distillation**

| *Analyte Code* | *Analyte* |
|---|---|
| 1510 | Amenable cyanide |

**SM 4500-H+ B 20th ED** **20104807** **pH by Probe**

| *Analyte Code* | *Analyte* |
|---|---|
| 1900 | pH |

**SM 4500-NO2¯B 20th ED** **20112301** **Nitrite by Colorimetric Determination**

| *Analyte Code* | *Analyte* |
|---|---|
| 1840 | Nitrite as N |

**SM 4500-S2¯D 20th ED** **20125400** **Sulfide by Methylene Blue Method**

| *Analyte Code* | *Analyte* |
|---|---|
| 2005 | Sulfide |

**SM 4500-S2¯F 20th ED** **20126209** **Sulfide by Iodometric Titration**

| *Analyte Code* | *Analyte* |
|---|---|
| 2005 | Sulfide |

**SM 4500-SO3¯B 20th ED** **20130205** **Sulfite by Iodometric Method**

| *Analyte Code* | *Analyte* |
|---|---|
| 2015 | Sulfite-SO3 |

NELAP RECOGNIZED
ACCREDITATION BODY

# ORELAP Fields of Accreditation

***ORELAP ID:*** CO200001
***EPA CODE:*** CO0026
***Certificate:*** CO200001 - 009

TestAmerica Denver

4955 Yarrow Street
Arvada CO 80002

***Issue Date:*** 01/17/2013 ***Expiration Date:*** 01/16/2014

***As of*** 01/17/2013 ***this list supercedes all previous lists for this certificate number.***
***Customers. Please verify the current accreditation standing with ORELAP.***

**SM 5210 B 20th ED** **20134809** **Biochemical Oxygen Demand, 5-Day (BOD5)**

| *Analyte Code* | *Analyte* |
|---|---|
| 1530 | Biochemical oxygen demand |
| 1555 | Carbonaceous BOD, CBOD |

**SM 5310 B 20th ED** **20137400** **Total Organic Carbon by Combustion Infra-red Method**

| *Analyte Code* | *Analyte* |
|---|---|
| 2040 | Total organic carbon |

**SM 5320 B 20th ED** **20140403** **Absorbable Organic Halogen**

| *Analyte Code* | *Analyte* |
|---|---|
| 2045 | Total organic halides (TOX) |

NELAP RECOGNIZED
TNI
ACCREDITATION BODY

# ORELAP Fields of Accreditation

***ORELAP ID:*** CO200001
***EPA CODE:*** CO0026
***Certificate:*** CO200001 - 009

TestAmerica Denver

4955 Yarrow Street
Arvada CO 80002

***Issue Date:*** 01/17/2013 ***Expiration Date:*** 01/16/2014

***As of*** 01/17/2013 ***this list supercedes all previous lists for this certificate number.***
***Customers. Please verify the current accreditation standing with ORELAP.***

MATRIX : Solids

| Reference | Code | Description |
|---|---|---|
| **EPA 1010** | **10116606** | **Pensky-Martens Closed-Cup Method for Determining Ignitability** |
| *Analyte Code* | *Analyte* | |
| 1780 | Ignitability | |
| **EPA 1311** | **10118806** | **Toxicity Characteristic Leaching Procedure** |
| *Analyte Code* | *Analyte* | |
| 8031 | Extraction/Preparation | |
| **EPA 1312** | **10119003** | **Synthetic Precipitation Leaching Procedure** |
| *Analyte Code* | *Analyte* | |
| 8031 | Extraction/Preparation | |
| **EPA 200.8 5.5** | **10014809** | **Metals by ICP-MS** |
| *Analyte Code* | *Analyte* | |
| 1175 | Tin | |
| **EPA 3050B** | **10135601** | **Acid Digestion of Sediments, Sludges, and soils** |
| *Analyte Code* | *Analyte* | |
| 8031 | Extraction/Preparation | |
| **EPA 350.1 2** | **10063602** | **Ammonia Nitrogen - Colorimetric, Auto Phenate** |
| *Analyte Code* | *Analyte* | |
| 1515 | Ammonia as N | |
| **EPA 353.2 2** | **10067604** | **Nitrate/Nitrite Nitrogen - Automated, Cadmium** |
| *Analyte Code* | *Analyte* | |
| 1810 | Nitrate as N | |
| 1825 | Total Nitrate/Nitrite | |
| **EPA 3540C** | **10140202** | **Soxhlet Extraction** |
| *Analyte Code* | *Analyte* | |
| 8031 | Extraction/Preparation | |
| **EPA 3546** | **10141205** | **Microwave Extraction** |
| *Analyte Code* | *Analyte* | |
| 8031 | Extraction/Preparation | |
| **EPA 3550B** | **10141807** | **Ultrasonic Extraction** |
| *Analyte Code* | *Analyte* | |
| 8031 | Extraction/Preparation | |
| **EPA 3660B** | **10148400** | **Sulfur cleanup** |
| *Analyte Code* | *Analyte* | |
| 8031 | Extraction/Preparation | |

NELAP RECOGNIZED
TNI
ACCREDITATION BODY

# ORELAP Fields of Accreditation

**ORELAP ID:** CO200001
**EPA CODE:** CO0026
**Certificate:** CO200001 - 009

## TestAmerica Denver

4955 Yarrow Street
Arvada CO 80002

***Issue Date:*** 01/17/2013 ***Expiration Date:*** 01/16/2014

***As of*** 01/17/2013 ***this list supercedes all previous lists for this certificate number. Customers. Please verify the current accreditation standing with ORELAP.***

**EPA 3665A** **10148808** **Sulfuric Acid / permanganate Cleanup**

| *Analyte Code* | *Analyte* |
|---|---|
| 8031 | Extraction/Preparation |

**EPA 5035** **10154004** **Closed-System Purge-and-Trap and Extraction for Volatile Organics in Soil and Waste Samples**

| *Analyte Code* | *Analyte* |
|---|---|
| 8031 | Extraction/Preparation |

**EPA 6010B** **10155609** **ICP - AES**

| *Analyte Code* | *Analyte* |
|---|---|
| 1000 | Aluminum |
| 1005 | Antimony |
| 1010 | Arsenic |
| 1015 | Barium |
| 1020 | Beryllium |
| 1025 | Boron |
| 1030 | Cadmium |
| 1035 | Calcium |
| 1040 | Chromium |
| 1050 | Cobalt |
| 1055 | Copper |
| 1070 | Iron |
| 1075 | Lead |
| 1080 | Lithium |
| 1085 | Magnesium |
| 1090 | Manganese |
| 1100 | Molybdenum |
| 1105 | Nickel |
| 1910 | Phosphorus, total |
| 1125 | Potassium |
| 1140 | Selenium |
| 1990 | Silica as SiO2 |
| 1145 | Silicon |
| 1150 | Silver |
| 1155 | Sodium |
| 1160 | Strontium |
| 1165 | Thallium |
| 1175 | Tin |
| 1180 | Titanium |
| 1185 | Vanadium |
| 1190 | Zinc |

**EPA 6020** **10156000** **Inductively Coupled Plasma-Mass Spectrometry**

| *Analyte Code* | *Analyte* |
|---|---|
| 1005 | Antimony |
| 1010 | Arsenic |
| 1015 | Barium |
| 1020 | Beryllium |
| 1030 | Cadmium |
| 1040 | Chromium |
| 1050 | Cobalt |
| 1055 | Copper |
| 1075 | Lead |
| 1090 | Manganese |
| 1100 | Molybdenum |
| 1105 | Nickel |
| 1140 | Selenium |

NELAP RECOGNIZED
TNI
ACCREDITATION BODY

# ORELAP Fields of Accreditation

***ORELAP ID:*** CO200001
***EPA CODE:*** CO0026
***Certificate:*** CO200001 - 009

TestAmerica Denver

4955 Yarrow Street
Arvada CO 80002

***Issue Date:*** 01/17/2013 ***Expiration Date:*** 01/16/2014

***As of*** 01/17/2013 ***this list supercedes all previous lists for this certificate number.***
***Customers. Please verify the current accreditation standing with ORELAP.***

| *Analyte Code* | *Analyte* |
|---|---|
| 1150 | Silver |
| 1165 | Thallium |
| 1185 | Vanadium |
| 1190 | Zinc |

**EPA 6860** **10304800** **Perchlorate in Water, Soils and Solid Wastes Using Ion Chromatography/Electrospray Ionization/Mass Spectrometry**

| *Analyte Code* | *Analyte* |
|---|---|
| 1895 | Perchlorate |

**EPA 7471A** **10166208** **Mercury in Solid Waste by Cold-Vapor Atomic Absorption**

| *Analyte Code* | *Analyte* |
|---|---|
| 1095 | Mercury |

**EPA 8015B** **10173601** **Non-halogenated organics using GC/FID**

| *Analyte Code* | *Analyte* |
|---|---|
| 9369 | Diesel range organics (DRO) |
| 4750 | Ethanol |
| 9408 | Gasoline range organics (GRO) |
| 4875 | Isobutyl alcohol (2-Methyl-1-propanol) |
| 4930 | Methanol |
| 4425 | n-Butyl alcohol (1-Butanol, n-Butanol) |

**EPA 8021B** **10174808** **Aromatic and Halogenated Volatiles by GC with PID and/or ECD Purge & Trap**

| *Analyte Code* | *Analyte* |
|---|---|
| 4610 | 1,2-Dichlorobenzene |
| 4615 | 1,3-Dichlorobenzene |
| 4620 | 1,4-Dichlorobenzene |
| 4375 | Benzene |
| 4475 | Chlorobenzene |
| 4765 | Ethylbenzene |
| 5240 | m,p-xylene |
| 5000 | Methyl tert-butyl ether (MTBE) |
| 5250 | o-Xylene |
| 5140 | Toluene |
| 5260 | Xylene (total) |

**EPA 8081A** **10174809** **Organochlorine Pesticides by GC/ECD**

| *Analyte Code* | *Analyte* |
|---|---|
| 7355 | 4,4'-DDD |
| 7360 | 4,4'-DDE |
| 7365 | 4,4'-DDT |
| 7025 | Aldrin |
| 7110 | alpha-BHC (alpha-Hexachlorocyclohexane) |
| 7240 | alpha-Chlordane |
| 7115 | beta-BHC (beta-Hexachlorocyclohexane) |
| 7250 | Chlordane (tech.) |
| 7260 | Chlorobenzilate |
| 7105 | delta-BHC |
| 7405 | Diallate |
| 7460 | Dicofol |
| 7470 | Dieldrin |
| 7510 | Endosulfan I |
| 7515 | Endosulfan II |
| 7520 | Endosulfan sulfate |
| 7540 | Endrin |

NELAP RECOGNIZED
TNI
ACCREDITATION BODY

# ORELAP Fields of Accreditation

**ORELAP ID:** CO200001
**EPA CODE:** CO0026
**Certificate:** CO200001 - 009

## TestAmerica Denver

4955 Yarrow Street
Arvada CO 80002

***Issue Date:*** 01/17/2013 ***Expiration Date:*** 01/16/2014

***As of*** 01/17/2013 ***this list supercedes all previous lists for this certificate number. Customers. Please verify the current accreditation standing with ORELAP.***

| Analyte Code | Analyte |
|---|---|
| 7530 | Endrin aldehyde |
| 7535 | Endrin ketone |
| 7120 | gamma-BHC (Lindane, gamma-HexachlorocyclohexanE) |
| 7245 | gamma-Chlordane |
| 7685 | Heptachlor |
| 7690 | Heptachlor epoxide |
| 6275 | Hexachlorobenzene |
| 7725 | Isodrin |
| 7740 | Kepone |
| 7810 | Methoxychlor |
| 7870 | Mirex |
| 8250 | Toxaphene (Chlorinated camphene) |

**EPA 8082** **10179007** **Polychlorinated Biphenyls (PCBs) by GC/ECD**

| Analyte Code | Analyte |
|---|---|
| 8880 | Aroclor-1016 (PCB-1016) |
| 8885 | Aroclor-1221 (PCB-1221) |
| 8890 | Aroclor-1232 (PCB-1232) |
| 8895 | Aroclor-1242 (PCB-1242) |
| 8900 | Aroclor-1248 (PCB-1248) |
| 8905 | Aroclor-1254 (PCB-1254) |
| 8910 | Aroclor-1260 (PCB-1260) |
| 8912 | Aroclor-1262 (PCB-1262) |
| 8913 | Aroclor-1268 (PCB-1268) |

**EPA 8141A** **10182000** **Organophosphorous Pesticides by GC/NPD**

| Analyte Code | Analyte |
|---|---|
| 7065 | Atrazine |
| 7070 | Azinphos-ethyl (Ethyl guthion) |
| 7075 | Azinphos-methyl (Guthion) |
| 7125 | Bolstar (Sulprofos) |
| 7220 | Carbophenothion |
| 7300 | Chlorpyrifos |
| 7305 | Chlorpyrifos-methyl |
| 7315 | Coumaphos |
| 7395 | Demeton-O |
| 7385 | Demeton-S |
| 7410 | Diazinon |
| 8610 | Dichlorovos (DDVP, Dichlorvos) |
| 7475 | Dimethoate |
| 8625 | Disulfoton |
| 7550 | EPN |
| 7570 | Ethoprop |
| 7580 | Famphur |
| 7600 | Fensulfothion |
| 7605 | Fenthion |
| 7770 | Malathion |
| 7785 | Merphos |
| 7825 | Methyl parathion (Parathion, methyl) |
| 7850 | Mevinphos |
| 7905 | Naled |
| 7955 | Parathion, ethyl |
| 7985 | Phorate |
| 8000 | Phosmet (Imidan) |
| 8110 | Ronnel |
| 8125 | Simazine |
| 8155 | Sulfotepp |
| 8200 | Tetrachlorvinphos (Stirophos, Gardona) Z-isomer |
| 8235 | Thionazin (Zinophos) |

NELAP RECOGNIZED
TNI
ACCREDITATION BODY

# ORELAP Fields of Accreditation

**ORELAP ID:** CO200001
**EPA CODE:** CO0026
**Certificate:** CO200001 - 009

## TestAmerica Denver

4955 Yarrow Street
Arvada CO 80002

***Issue Date:*** 01/17/2013 ***Expiration Date:*** 01/16/2014

***As of*** 01/17/2013 ***this list supercedes all previous lists for this certificate number. Customers. Please verify the current accreditation standing with ORELAP.***

| *Analyte Code* | *Analyte* |
|---|---|
| 8245 | Tokuthion (Prothiophos) |
| 8275 | Trichloronate |

**EPA 8151A** **10183207** **Chlorinated Herbicides by GC/ECD**

| *Analyte Code* | *Analyte* |
|---|---|
| 8655 | 2,4,5-T |
| 8545 | 2,4-D |
| 8560 | 2,4-DB |
| 8555 | Dalapon |
| 8595 | Dicamba |
| 8605 | Dichloroprop (Dichlorprop) |
| 7775 | MCPA |
| 7780 | MCPP |
| 8650 | Silvex (2,4,5-TP) |

**EPA 8260B** **10184802** **Volatile Organic Compounds by purge and trap GC/MS**

| *Analyte Code* | *Analyte* |
|---|---|
| 5105 | 1,1,1,2-Tetrachloroethane |
| 5160 | 1,1,1-Trichloroethane |
| 5110 | 1,1,2,2-Tetrachloroethane |
| 5195 | 1,1,2-Trichloro-1,2,2-trifluoroethane (Freon 113) |
| 5165 | 1,1,2-Trichloroethane |
| 4630 | 1,1-Dichloroethane |
| 4640 | 1,1-Dichloroethylene |
| 4670 | 1,1-Dichloropropene |
| 5150 | 1,2,3-Trichlorobenzene |
| 5180 | 1,2,3-Trichloropropane |
| 5155 | 1,2,4-Trichlorobenzene |
| 5210 | 1,2,4-Trimethylbenzene |
| 4570 | 1,2-Dibromo-3-chloropropane (DBCP) |
| 4585 | 1,2-Dibromoethane (EDB, Ethylene dibromide) |
| 4610 | 1,2-Dichlorobenzene |
| 4635 | 1,2-Dichloroethane (Ethylene dichloride) |
| 4655 | 1,2-Dichloropropane |
| 5215 | 1,3,5-Trimethylbenzene |
| 4615 | 1,3-Dichlorobenzene |
| 4660 | 1,3-Dichloropropane |
| 4620 | 1,4-Dichlorobenzene |
| 4735 | 1,4-Dioxane (1,4-Diethyleneoxide) |
| 4510 | 1-Chlorohexane |
| 4665 | 2,2-Dichloropropane |
| 4410 | 2-Butanone (Methyl ethyl ketone, MEK) |
| 4500 | 2-Chloroethyl vinyl ether |
| 4535 | 2-Chlorotoluene |
| 4860 | 2-Hexanone |
| 5020 | 2-Nitropropane |
| 5045 | 2-Pentanone |
| 4540 | 4-Chlorotoluene |
| 4910 | 4-Isopropyltoluene (p-Cymene) |
| 4995 | 4-Methyl-2-pentanone (MIBK) |
| 4315 | Acetone |
| 4320 | Acetonitrile |
| 4325 | Acrolein (Propenal) |
| 4340 | Acrylonitrile |
| 4355 | Allyl chloride (3-Chloropropene) |
| 4375 | Benzene |
| 4385 | Bromobenzene |
| 4390 | Bromochloromethane |
| 4395 | Bromodichloromethane |

NELAP RECOGNIZED
TNI
ACCREDITATION BODY

# ORELAP Fields of Accreditation

**ORELAP ID:** CO200001
**EPA CODE:** CO0026
**Certificate:** CO200001 - 009

TestAmerica Denver

4955 Yarrow Street
Arvada CO 80002

***Issue Date:*** 01/17/2013 ***Expiration Date:*** 01/16/2014

***As of*** 01/17/2013 ***this list supercedes all previous lists for this certificate number. Customers. Please verify the current accreditation standing with ORELAP.***

| *Analyte Code* | *Analyte* |
|---|---|
| 4400 | Bromoform |
| 4450 | Carbon disulfide |
| 4455 | Carbon tetrachloride |
| 4475 | Chlorobenzene |
| 4575 | Chlorodibromomethane |
| 4485 | Chloroethane (Ethyl chloride) |
| 4505 | Chloroform |
| 4525 | Chloroprene (2-Chloro-1,3-butadiene) |
| 4645 | cis-1,2-Dichloroethylene |
| 4680 | cis-1,3-Dichloropropene |
| 4600 | cis-1,4-Dichloro-2-butene |
| 4595 | Dibromomethane (Methylene bromide) |
| 4625 | Dichlorodifluoromethane (Freon-12) |
| 4725 | Diethyl ether |
| 9375 | Di-isopropylether (DIPE) |
| 4750 | Ethanol |
| 4755 | Ethyl acetate |
| 4810 | Ethyl methacrylate |
| 4765 | Ethylbenzene |
| 4795 | Ethylene oxide |
| 4835 | Hexachlorobutadiene |
| 4870 | Iodomethane (Methyl iodide) |
| 4875 | Isobutyl alcohol (2-Methyl-1-propanol) |
| 4895 | Isopropyl alcohol (2-Propanol, Isopropanol) |
| 4900 | Isopropylbenzene |
| 5240 | m+p-xylene |
| 4925 | Methacrylonitrile |
| 4950 | Methyl bromide (Bromomethane) |
| 4960 | Methyl chloride (Chloromethane) |
| 4990 | Methyl methacrylate |
| 5000 | Methyl tert-butyl ether (MTBE) |
| 4975 | Methylene chloride (Dichloromethane) |
| 5005 | Naphthalene |
| 4425 | n-Butyl alcohol (1-Butanol, n-Butanol) |
| 4435 | n-Butylbenzene |
| 5090 | n-Propylbenzene |
| 5250 | o-Xylene |
| 5080 | Propionitrile (Ethyl cyanide) |
| 4440 | sec-Butylbenzene |
| 5100 | Styrene |
| 4420 | tert-Butyl alcohol |
| 4445 | tert-Butylbenzene |
| 5115 | Tetrachloroethylene (Perchloroethylene) |
| 5140 | Toluene |
| 4700 | trans-1,2-Dichloroethylene |
| 4685 | trans-1,3-Dichloropropylene |
| 4605 | trans-1,4-Dichloro-2-butene |
| 5170 | Trichloroethene (Trichloroethylene) |
| 5175 | Trichlorofluoromethane (Fluorotrichloromethane, Freon 11) |
| 5225 | Vinyl acetate |
| 5235 | Vinyl chloride |
| 5260 | Xylene (total) |

NELAP RECOGNIZED
TNI
ACCREDITATION BODY

**EPA 8270C** **10185805** **Semivolatile Organic compounds by GC/MS**

| *Analyte Code* | *Analyte* |
|---|---|
| 6715 | 1,2,4,5-Tetrachlorobenzene |
| 5155 | 1,2,4-Trichlorobenzene |
| 4610 | 1,2-Dichlorobenzene |
| 6221 | 1,2-Diphenylhydrazine |
| 6885 | 1,3,5-Trinitrobenzene (1,3,5-TNB) |

# ORELAP Fields of Accreditation

**ORELAP ID:** CO200001
**EPA CODE:** CO0026
**Certificate:** CO200001 - 009

## TestAmerica Denver

4955 Yarrow Street
Arvada CO 80002

***Issue Date:*** 01/17/2013 ***Expiration Date:*** 01/16/2014

***As of*** 01/17/2013 ***this list supercedes all previous lists for this certificate number.***
***Customers. Please verify the current accreditation standing with ORELAP.***

| *Analyte Code* | *Analyte* |
|---|---|
| 4615 | 1,3-Dichlorobenzene |
| 6160 | 1,3-Dinitrobenzene (1,3-DNB) |
| 4620 | 1,4-Dichlorobenzene |
| 6165 | 1,4-Dinitrobenzene |
| 6420 | 1,4-Naphthoquinone |
| 6630 | 1,4-Phenylenediamine |
| 5790 | 1-Chloronaphthalene |
| 6380 | 1-Methylnaphthalene |
| 6425 | 1-Naphthylamine |
| 6735 | 2,3,4,6-Tetrachlorophenol |
| 6835 | 2,4,5-Trichlorophenol |
| 6840 | 2,4,6-Trichlorophenol |
| 6000 | 2,4-Dichlorophenol |
| 6130 | 2,4-Dimethylphenol |
| 6175 | 2,4-Dinitrophenol |
| 6185 | 2,4-Dinitrotoluene (2,4-DNT) |
| 6005 | 2,6-Dichlorophenol |
| 6190 | 2,6-Dinitrotoluene (2,6-DNT) |
| 5515 | 2-Acetylaminofluorene |
| 5795 | 2-Chloronaphthalene |
| 5800 | 2-Chlorophenol |
| 5865 | 2-Cyclohexyl-4,6-dinitrophenol |
| 6360 | 2-Methyl-4,6-dinitrophenol (4,6-Dinitro-2-methylphenol) |
| 5145 | 2-Methylaniline (o-Toluidine) |
| 6385 | 2-Methylnaphthalene |
| 6400 | 2-Methylphenol (o-Cresol) |
| 6430 | 2-Naphthylamine |
| 6460 | 2-Nitroaniline |
| 6490 | 2-Nitrophenol |
| 5050 | 2-Picoline (2-Methylpyridine) |
| 5945 | 3,3'-Dichlorobenzidine |
| 6120 | 3,3'-Dimethylbenzidine |
| 6355 | 3-Methylcholanthrene |
| 6465 | 3-Nitroaniline |
| 5540 | 4-Aminobiphenyl |
| 5660 | 4-Bromophenyl phenyl ether |
| 5700 | 4-Chloro-3-methylphenol |
| 5745 | 4-Chloroaniline |
| 5825 | 4-Chlorophenyl phenylether |
| 6410 | 4-Methylphenol (p-Cresol) |
| 6470 | 4-Nitroaniline |
| 6500 | 4-Nitrophenol |
| 6570 | 5-Nitro-o-toluidine |
| 6115 | 7,12-Dimethylbenz(a) anthracene |
| 6125 | a-a-Dimethylphenethylamine |
| 5500 | Acenaphthene |
| 5505 | Acenaphthylene |
| 5510 | Acetophenone |
| 5545 | Aniline |
| 5555 | Anthracene |
| 5560 | Aramite |
| 5595 | Benzidine |
| 5575 | Benzo(a)anthracene |
| 5580 | Benzo(a)pyrene |
| 5590 | Benzo(g,h,i)perylene |
| 5600 | Benzo(k)fluoranthene |
| 5585 | Benzo[b]fluoranthene |
| 5610 | Benzoic acid |
| 5630 | Benzyl alcohol |
| 5760 | bis(2-Chloroethoxy)methane |
| 5765 | bis(2-Chloroethyl) ether |

NELAP RECOGNIZED
TNI
ACCREDITATION BODY

# ORELAP Fields of Accreditation

**ORELAP ID:** CO200001
**EPA CODE:** CO0026
**Certificate:** CO200001 - 009

## TestAmerica Denver

4955 Yarrow Street
Arvada CO 80002

***Issue Date:*** 01/17/2013 ***Expiration Date:*** 01/16/2014

***As of*** 01/17/2013 ***this list supercedes all previous lists for this certificate number.***
***Customers. Please verify the current accreditation standing with ORELAP.***

| *Analyte Code* | *Analyte* |
|---|---|
| 5780 | bis(2-Chloroisopropyl) ether |
| 5670 | Butyl benzyl phthalate |
| 5680 | Carbazole |
| 7260 | Chlorobenzilate |
| 5855 | Chrysene |
| 6065 | Di(2-ethylhexyl) phthalate (bis(2-Ethylhexyl)phthalate, DEHP) |
| 7405 | Diallate |
| 5900 | Dibenz(a,j) acridine |
| 5895 | Dibenz(a,h)anthracene |
| 5905 | Dibenzofuran |
| 6070 | Diethyl phthalate |
| 7475 | Dimetilan |
| 6135 | Dimethyl phthalate |
| 5925 | Di-n-butyl phthalate |
| 6200 | Di-n-octyl phthalate |
| 8620 | Dinoseb (2-sec-butyl-4,6-dinitrophenol, DNBP) |
| 8625 | Disulfoton |
| 6260 | Ethyl methanesulfonate |
| 6265 | Fluoranthene |
| 6270 | Fluorene |
| 6275 | Hexachlorobenzene |
| 4835 | Hexachlorobutadiene |
| 6285 | Hexachlorocyclopentadiene |
| 4840 | Hexachloroethane |
| 6290 | Hexachlorophene |
| 6295 | Hexachloropropene |
| 6315 | Indeno(1,2,3-cd) pyrene |
| 7725 | Isodrin |
| 6320 | Isophorone |
| 6325 | Isosafrole |
| 6345 | Methapyrilene |
| 6375 | Methyl methanesulfonate |
| 7825 | Methyl parathion (Parathion, methyl) |
| 5005 | Naphthalene |
| 5015 | Nitrobenzene |
| 6525 | n-Nitrosodiethylamine |
| 6530 | n-Nitrosodimethylamine |
| 5025 | n-Nitrosodi-n-butylamine |
| 6545 | n-Nitrosodi-n-propylamine |
| 6535 | n-Nitrosodiphenylamine |
| 6550 | n-Nitrosomethylethylamine |
| 6555 | n-Nitrosomorpholine |
| 6560 | n-Nitrosopiperidine |
| 6565 | n-Nitrosopyrrolidine |
| 8290 | o,o,o-Triethyl phosphorothioate |
| 7955 | Parathion, ethyl |
| 6590 | Pentachlorobenzene |
| 6600 | Pentachloronitrobenzene |
| 6605 | Pentachlorophenol |
| 6610 | Phenacetin |
| 6615 | Phenanthrene |
| 6625 | Phenol |
| 7985 | Phorate |
| 6650 | Pronamide (Kerb) |
| 6665 | Pyrene |
| 5095 | Pyridine |
| 6685 | Safrole |
| 8155 | Sulfotepp |
| 8235 | Thionazin (Zinophos) |

NELAP RECOGNIZED
TNI
ACCREDITATION BODY

# ORELAP Fields of Accreditation

**ORELAP ID:** CO200001
**EPA CODE:** CO0026
**Certificate:** CO200001 - 009

TestAmerica Denver

4955 Yarrow Street
Arvada CO 80002

***Issue Date:*** 01/17/2013 ***Expiration Date:*** 01/16/2014

***As of*** 01/17/2013 ***this list supercedes all previous lists for this certificate number.***
***Customers. Please verify the current accreditation standing with ORELAP.***

**EPA 8270C SIM** **10242407** **Semivolatile Organic compounds by GC/MS Selective Ion Monitoring**

| *Analyte Code* | *Analyte* |
|---|---|
| 6380 | 1-Methylnaphthalene |
| 6385 | 2-Methylnaphthalene |
| 5500 | Acenaphthene |
| 5505 | Acenaphthylene |
| 5555 | Anthracene |
| 5575 | Benzo(a)anthracene |
| 5580 | Benzo(a)pyrene |
| 5590 | Benzo(g,h,i)perylene |
| 5600 | Benzo(k)fluoranthene |
| 5585 | Benzo[b]fluoranthene |
| 5670 | Butyl benzyl phthalate |
| 5855 | Chrysene |
| 5895 | Dibenz(a,h) anthracene |
| 5905 | Dibenzofuran |
| 6070 | Diethyl phthalate |
| 6135 | Dimethyl phthalate |
| 5925 | Di-n-butyl phthalate |
| 6200 | Di-n-octyl phthalate |
| 6265 | Fluoranthene |
| 6270 | Fluorene |
| 6275 | Hexachlorobenzene |
| 4835 | Hexachlorobutadiene |
| 6315 | Indeno(1,2,3-cd) pyrene |
| 5005 | Naphthalene |
| 6615 | Phenanthrene |
| 6665 | Pyrene |

**EPA 8310** **10187607** **Polynuclear Aromatic Hydrocarbons by HPLC/UV-VIS**

| *Analyte Code* | *Analyte* |
|---|---|
| 6380 | 1-Methylnaphthalene |
| 5500 | Acenaphthene |
| 5505 | Acenaphthylene |
| 5555 | Anthracene |
| 5575 | Benzo(a)anthracene |
| 5580 | Benzo(a)pyrene |
| 5590 | Benzo(g,h,i)perylene |
| 5600 | Benzo(k)fluoranthene |
| 5585 | Benzo[b]fluoranthene |
| 5855 | Chrysene |
| 5895 | Dibenz(a,h) anthracene |
| 6265 | Fluoranthene |
| 6270 | Fluorene |
| 6315 | Indeno(1,2,3-cd) pyrene |
| 5005 | Naphthalene |
| 6615 | Phenanthrene |
| 6665 | Pyrene |

**EPA 8321A** **10189001** **Solvent Extractable non-volatile compounds by HPLC/TS/MS**

| *Analyte Code* | *Analyte* |
|---|---|
| 8655 | 2,4,5-T |
| 8545 | 2,4-D |
| 8560 | 2,4-DB |
| 7010 | Aldicarb (Temik) |
| 7195 | Carbaryl (Sevin) |
| 7205 | Carbofuran (Furaden) |
| 8555 | Dalapon |

NOT RECOGNIZED
ACCREDITATION BODY

# ORELAP Fields of Accreditation

***ORELAP ID:*** CO200001
***EPA CODE:*** CO0026
***Certificate:*** CO200001 - 009

## TestAmerica Denver

4955 Yarrow Street
Arvada CO 80002

***Issue Date:*** 01/17/2013 ***Expiration Date:*** 01/16/2014

***As of*** 01/17/2013 ***this list supercedes all previous lists for this certificate number.***
***Customers. Please verify the current accreditation standing with ORELAP.***

| *Analyte Code* | *Analyte* |
|---|---|
| 8595 | Dicamba |
| 8605 | Dichloroprop (Dichlorprop) |
| 8620 | Dinoseb (2-sec-butyl-4,6-dinitrophenol, DNBP) |
| 7505 | Diuron |
| 7775 | MCPA |
| 7780 | MCPP |
| 7800 | Methiocarb (Mesurol) |
| 7940 | Oxamyl |
| 8075 | Propham |
| 8080 | Prepoxur (Baygon) |
| 8650 | Silvex (2,4,5-TP) |

**EPA 8330** **10189807** **Nitroaromatics and Nitramines by HPLC/UV-VIS**

| *Analyte Code* | *Analyte* |
|---|---|
| 6885 | 1,3,5-Trinitrobenzene (1,3,5-TNB) |
| 6160 | 1,3-Dinitrobenzene (1,3-DNB) |
| 9651 | 2,4,6-Trinitrotoluene (2,4,6-TNT) |
| 6185 | 2,4-Dinitrotoluene (2,4-DNT) |
| 6190 | 2,6-Dinitrotoluene (2,6-DNT) |
| 9303 | 2-Amino-4,6-dinitrotoluene (2-am-dnt) |
| 9507 | 2-Nitrotoluene |
| 9510 | 3-Nitrotoluene |
| 9306 | 4-Amino-2,6-dinitrotoluene (4-am-dnt) |
| 9513 | 4-Nitrotoluene |
| 6415 | Methyl-2,4,6-trinitrophenylnitramine (tetryl) |
| 5015 | Nitrobenzene |
| 6485 | Nitroglycerin |
| 9522 | Octahydro-1,3,5,7-tetranitro-1,3,5,7-tetrazocine (HMX) |
| 9558 | Pentaerythritoltetranitrate |
| 9432 | RDX (hexahydro-1,3,5-trinitro-1,3,5-triazine) |

**EPA 8330A** **10190008** **Nitroaromatics and Nitramines by High Performance Liquid Chromatography (HPLC)**

| *Analyte Code* | *Analyte* |
|---|---|
| 6885 | 1,3,5-Trinitrobenzene (1,3,5-TNB) |
| 6160 | 1,3-Dinitrobenzene (1,3-DNB) |
| 9651 | 2,4,6-Trinitrotoluene (2,4,6-TNT) |
| 6185 | 2,4-Dinitrotoluene (2,4-DNT) |
| 6190 | 2,6-Dinitrotoluene (2,6-DNT) |
| 9303 | 2-Amino-4,6-dinitrotoluene (2-am-dnt) |
| 9507 | 2-Nitrotoluene |
| 9510 | 3-Nitrotoluene |
| 9306 | 4-Amino-2,6-dinitrotoluene (4-am-dnt) |
| 9513 | 4-Nitrotoluene |
| 6415 | Methyl-2,4,6-trinitrophenylnitramine (tetryl) |
| 5015 | Nitrobenzene |
| 6485 | Nitroglycerin |
| 9522 | Octahydro-1,3,5,7-tetranitro-1,3,5,7-tetrazocine (HMX) |
| 9558 | Pentaerythritoltetranitrate |
| 9432 | RDX (hexahydro-1,3,5-trinitro-1,3,5-triazine) |

**EPA 8330B** **10308006** **Nitroaromatics, Nitramines and Nitrate Esters by High Performance Liquid Chromatography (HPLC)**

| *Analyte Code* | *Analyte* |
|---|---|
| 6885 | 1,3,5-Trinitrobenzene (1,3,5-TNB) |
| 6160 | 1,3-Dinitrobenzene (1,3-DNB) |
| 9651 | 2,4,6-Trinitrotoluene (2,4,6-TNT) |
| 6185 | 2,4-Dinitrotoluene (2,4-DNT) |
| 6190 | 2,6-Dinitrotoluene (2,6-DNT) |

NELAP RECOGNIZED ACCREDITATION BODY

# ORELAP Fields of Accreditation

*ORELAP ID:* CO200001
*EPA CODE:* CO0026
*Certificate:* CO200001 - 009

TestAmerica Denver

4955 Yarrow Street
Arvada CO 80002

***Issue Date:*** 01/17/2013 ***Expiration Date:*** 01/16/2014

***As of*** 01/17/2013 ***this list supercedes all previous lists for this certificate number.***
***Customers. Please verify the current accreditation standing with ORELAP.***

| *Analyte Code* | *Analyte* |
|---|---|
| 9303 | 2-Amino-4,6-dinitrotoluene (2-am-dnt) |
| 9507 | 2-Nitrotoluene |
| 9510 | 3-Nitrotoluene |
| 9306 | 4-Amino-2,6-dinitrotoluene (4-am-dnt) |
| 9513 | 4-Nitrotoluene |
| 6415 | Methyl-2,4,6-trinitrophenylnitramine (tetryl) |
| 5015 | Nitrobenzene |
| 6485 | Nitroglycerin |
| 9522 | Octahydro-1,3,5,7-tetranitro-1,3,5,7-tetrazocine (HMX) |
| 9558 | Pentaerythritoltetranitrate |
| 9432 | RDX (hexahydro-1,3,5-trinitro-1,3,5-triazine) |

**EPA 9012A** **10193405** **Total and Amenable Cyanide (automated colorimetric with off-line distillation)**

| *Analyte Code* | *Analyte* |
|---|---|
| 1645 | Total cyanide |

**EPA 9030B** **10195605** **Acid-Soluble and Acid-Insoluble sulfides Distillation**

| *Analyte Code* | *Analyte* |
|---|---|
| 2005 | Sulfide |

**EPA 9034** **10196006** **Titrimetric Procedure for Acid-Soluble and Acid-Insoluble Sulfides**

| *Analyte Code* | *Analyte* |
|---|---|
| 2005 | Sulfide |

**EPA 9040B** **10197203** **pH Electrometric Measurement**

| *Analyte Code* | *Analyte* |
|---|---|
| 1900 | pH |

**EPA 9045C** **10198400** **Soil and Waste pH**

| *Analyte Code* | *Analyte* |
|---|---|
| 1900 | pH |

**EPA 9050A** **10198808** **Specific Conductance**

| *Analyte Code* | *Analyte* |
|---|---|
| 1610 | Conductivity |

**EPA 9056A** **10199607** **Determination of Inorganic Anions by Ion Chromatography**

| *Analyte Code* | *Analyte* |
|---|---|
| 1540 | Bromide |
| 1575 | Chloride |
| 1730 | Fluoride |
| 1805 | Nitrate |
| 1820 | Nitrate-nitrite |
| 1835 | Nitrite |
| 1870 | Orthophosphate as P |
| 2000 | Sulfate |

**EPA 9060** **10200201** **Total Organic Carbon**

| *Analyte Code* | *Analyte* |
|---|---|
| 2040 | Total organic carbon |

NELAP RECOGNIZED
TNI
ACCREDITATION BODY

# ORELAP Fields of Accreditation

***ORELAP ID:*** CO200001
***EPA CODE:*** CO0026
***Certificate:*** CO200001 - 009

TestAmerica Denver

4955 Yarrow Street
Arvada CO 80002

***Issue Date:*** 01/17/2013 ***Expiration Date:*** 01/16/2014

***As of*** 01/17/2013 ***this list supercedes all previous lists for this certificate number.***
***Customers. Please verify the current accreditation standing with ORELAP.***

**EPA 9071A** **10201408** **Oil and Grease Extraction Method for sludge and sediment samples**

| *Analyte Code* | *Analyte* |
|---|---|
| 1860 | Oil & Grease |

**EPA 9095A** **10204203** **Paint Filter Liquids Test**

| *Analyte Code* | *Analyte* |
|---|---|
| 8031 | Extraction/Preparation |

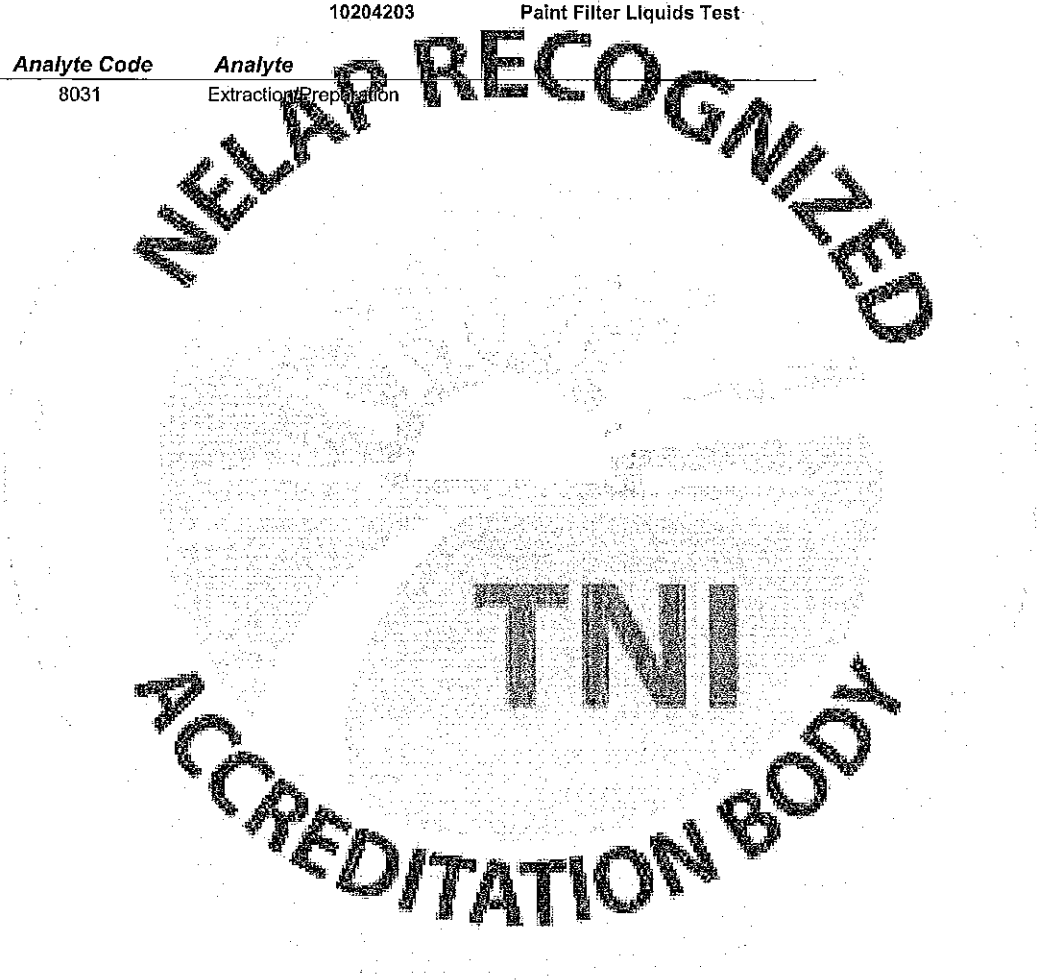

# TestAmerica Laboratories, Inc.
# Quality Assurance Manual

TestAmerica
THE LEADER IN ENVIRONMENTAL TESTING

*TestAmerica Denver*

**BUSINESS CONFIDENTIAL INFORMATION**
**DO NOT COPY**
**DO NOT DISTRIBUTE**

# Electronic Document Cover

The electronic copy of this document, as maintained on the TestAmerica Denver computer network, is the controlled copy. Any printed copy becomes uncontrolled, and all work performed should ultimately reference the controlled electronic version.

Any printed or electronic copy of this document that is distributed external to TestAmerica Denver becomes uncontrolled. To arrange for automatic updates to this document, contact TestAmerica Denver.

TestAmerica Laboratories, Inc.
TestAmerica Denver
4955 Yarrow Street
Arvada, CO 80002

Phone: 303-736-0100
Fax: 303-431-7171

Electronic Copy Only

# Quality Assurance Manual

**TestAmerica Denver**
**4955 Yarrow Street**
**Arvada, CO 80002**
**303-736-0100**
**303-431-7171**

**www.testamericainc.com**

**Copyright Information:**
This documentation has been prepared by TestAmerica Laboratories, Inc. and its affiliates ("TestAmerica"), solely for their own use and the use of their customers in evaluating their qualifications and capabilities in connection with a particular project. The user of this document agrees by its acceptance to return it to TestAmerica upon request and not to reproduce, copy, lend, or otherwise disclose its contents, directly or indirectly, and not to use it for any other purpose other than that for which it was specifically provided. The user also agrees that where consultants or other outside parties are involved in the evaluation process, access to these documents shall not be given to said parties unless those parties also specifically agree to these conditions.

**THIS DOCUMENT CONTAINS VALUABLE CONFIDENTIAL AND PROPRIETARY INFORMATION. DISCLOSURE, USE OR REPRODUCTION OF THESE MATERIALS WITHOUT THE WRITTEN AUTHORIZATION OF TESTAMERICA IS STRICTLY PROHIBITED. THIS UNPUBLISHED WORK BY TESTAMERICA IS PROTECTED BY STATE AND FEDERAL LAW OF THE UNITED STATES. IF PUBLICATION OF THIS WORK SHOULD OCCUR THE FOLLOWING NOTICE SHALL APPLY:**

**©COPYRIGHT 2012 TESTAMERICA LABORATORIES, INC. ALL RIGHTS RESERVED.**

**Facility Distribution No. _____** **Distributed To:_____**

# Title Page:

## Quality Assurance Manual
## Approval Signatures

Robert C Hanisch — 7/26/12

Laboratory Director - Robert C. Hanisch
303-736-0100 — Date

Karen Kuoppala — 07/26/12

Operations Manager - Karen Kuoppala
303-736-0100 — Date

JPM — 07/26/12

Quality Manager - John P. Morris
303-736-0100 — Date

## SECTION 2. TABLE OF CONTENTS


| Sec. No. | Title | 2009 TNI Standard Reference | ISO/IEC 17025:2005 (E) Reference | Page No. |
|---|---|---|---|---|
| - | COVER PAGE | V1M2 Sec. 4.2.8.3 | | 1 |
| 1.0 | TITLE PAGE | | | 2 |
| 2.0 | TABLE OF CONTENTS | V1M2 Secs. 4.2.8.3-4.2.8.4 | | 3 |
| 3.0 | INTRODUCTION, SCOPE AND APPLICABILITY | V1M2 Sec. 4.2.8.4 | | 14 |
| 3.1 | Introduction And Compliance References | V1M2 Secs. 1.1; 1.2; 2.0; 3.2; 4.1.2; 4.2.4 | 4.1.2; 4.2.4 | 14 |
| 3.2 | Terms And Definitions | V1M2 Secs. 3.0; 4.2.4 | 4.2.4 | 15 |
| 3.3 | Scope / Fields Of Testing | V1M2 Secs. 1.2; 4.2.4 | 4.1.2; 4.2.4 | 16 |
| 3.4 | Management Of The Manual | V1M2 Secs. 4.2.1; 4.2.7; 4.3.3.2; 4.3.3.3 | 4.2.1; 4.2.7; 4.3.3.2; 4.3.3.3 | 16 |
| 4.0 | MANAGEMENT REQUIREMENTS | V1M2 Sec. 4 | | 17 |
| 4.1 | Overview | V1M2 Secs. 4.1.1, 4.1.3; 4.1.5 | 4.1.1; 4.1.3; 4.1.5; 4.2.6 | 17 |
| 4.2 | Roles And Responsibilities | V1M2 Secs. 4.1.4; 4.1.5; 4.1.6; 4.2.1; 4.2.6; 5.2.4 | 4.1.3; 4.1.5; 4.1.6; 4.2.1; 4.2.6; 5.2.4 | 17 |
| 4.3 | DEPUTIES | V1M2 Secs. 4.1.5; 4.1.7.2; 4.2.7 | 4.1.5; 4.2.7 | 30 |
| 5.0 | QUALITY SYSTEM | | | 33 |
| 5.1 | Quality Policy Statement | V1M2 Secs. 4.1.5; 4.2.2; 4.2.3; 4.2.8.3 | 4.1.5; 4.2.2; 4.2.3 | 33 |
| 5.2 | Ethics And Data Integrity | V1M2 Secs. 4.1.5; 4.16; 4.2.2; 4.2.8.1; 5.2.7 | 4.1.5; 4.2.2 | 33 |
| 5.3 | Quality System Documentation | V1M2 Secs. 4.1.5; 4.2.2; 4.2.5 | 4.2.2; 4.2.5 | 34 |
| 5.4 | QA/QC Objectives For The Measurement Of Data | V1M2 Sec. 4.2.2 | 4.1.5; 4.2.2 | 35 |
| 5.5 | Criteria For Quality Indicators | | | 37 |
| 5.6 | Statistical Quality Control | | | 37 |
| 5.7 | Quality System Metrics | | | 38 |
| 6.0 | DOCUMENT CONTROL | V1M2 Secs. 4.2.7; 4.3.1; 4.3.2.2 ; 4.3.3.3; 4.3.3.4 | 4.2.7; 4.3.1; 4.3.2.2; 4.3.3.3; 4.3.3.4 | 38 |
| 6.1 | Overview | | | 38 |
| 6.2 | Document Approval And Issue | V1M2 Secs. 4.3.2; 4.3.2.1-4.3.2.3; 4.3.3.1 | 4.3.2.1; 4.3.2.2; 4.3.2.3; 4.3.3.1 | 38 |

| Sec. No. | Title | 2009 TNI Standard Reference | ISO/IEC 17025:2005 (E) Reference | Page No. |
|---|---|---|---|---|
| 6.3 | Procedures For Document Control Policy | V1M2 Secs. 4.3.2.1–4.3.2.2; 4.3.3.1 | 4.3.2.1; 4.3.2.2; 4.3.3.1 | 39 |
| 6.4 | Obsolete Documents | V1M2 Secs. 4.3.2.1–4.3.2.2 | 4.3.2.1; 4.3.2.2 | 39 |
| 7.0 | SERVICE TO THE CLIENT | V1M2 Secs. 4.4.1 - 4.4.4 | 4.4.1; 4.4.2; 4.4.3; 4.4.4 | 40 |
| 7.1 | Overview | V1M2 Secs. 4.4.5; 4.5.5; 5.7.1 | 4.4.5; 5.7.1 | 40 |
| 7.2 | Review Sequence And Key Personnel | V1M2 Sec. 4.4.5 | 4.4.5 | 41 |
| 7.3 | Documentation | V1M2 Sec. 5.7.1 | 5.7.1 | 42 |
| 7.4 | Special Services | V1M2 Secs. 4.7.1-4.7.2 | 4.7.1; 4.7.2 | 43 |
| 7.5 | Client Communication | V1M2 Secs. 4.7.1-4.7.2 | 4.7.1; 4.7.2 | 43 |
| 7.6 | Reporting | V1M2 Secs. 4.7.1-4.7.2 | 4.7.1; 4.7.2 | 44 |
| 7.7 | Client Surveys | V1M2 Secs. 4.7.1-4.7.2 | 4.7.1; 4.7.2 | 44 |
| 8.0 | SUBCONTRACTING OF TESTS | V1M2 Secs. 4.4.3; 4.5.4 | 4.4.3; 4.5.4 | 44 |
| 8.1 | Overview | V1M2 Secs. 4.5.1 - 4.5.3; 4.5.5; 5.3.1 | 4.5.1; 4.5.2; 4.5.3; 5.3.1 | 44 |
| 8.2 | Qualifying And Monitoring Subcontracators | V1M2 Secs. 4.5.1; 4.5.2; 4.5.3; 4.5.5 | 4.5.1; 4.5.2; 4.5.3 | 45 |
| 8.3 | Oversight And Reporting | V1M2 Sec. 4.5.5 | | 46 |
| 8.4 | Contingency Planning | | | 47 |
| 9.0 | PURCHASING SERVICES AND SUPPLIES | V1M2 Sec. 4.6.1 | 4.6.1 | 49 |
| 9.1 | Overview | V1M2 Secs. 4.6.2; 4.6.3; 4.6.4 | 4.6.2; 4.6.3; 4.6.4 | 49 |
| 9.2 | Glassware | V1M2 Sec. 5.5.13.1 | | 49 |
| 9.3 | Reagents, Standards & Supplies | V1M2 Secs. 4.6.2; 4.6.3; 4.6.4 | 4.6.2; 4.6.3; 4.6.4 | 49 |
| 9.4 | Purchase Of Equipment / Instruments / Software | | | 51 |
| 9.5 | Services | | | 52 |
| 9.6 | Suppliers | | | 52 |
| 10.0 | COMPLAINTS | V1M2 Sec. 4.8 | 4.8 | 53 |
| 10.1 | Overview | | | 53 |
| 10.2 | External Complaints | | | 54 |
| 10.3 | Internal Complaints | | | 54 |
| 10.4 | Management Review | | | 54 |
| 11.0 | CONTROL OF NON-CONFORMING WORK | V1M2 Secs. 4.9.1; 5.10.5 | 4.9.1; 5.10.5 | 54 |

| Sec. No. | Title | 2009 TNI Standard Reference | ISO/IEC 17025:2005 (E) Reference | Page No. |
|---|---|---|---|---|
| 11.1 | Overview | V1M2 Secs. 4.9.1; 4.11.3; 4.11.5 | 4.9.1; 4.11.3; 4.11.5 | 54 |
| 11.2 | Responsibilities And Authorities | V1M2 Secs. 4.9.1; 4.11.3; 4.11.5; 5.2.7 | 4.9.1; 4.11.3; 4.11.5 | 55 |
| 11.3 | Evaluation Of Significance And Actions Taken | V1M2 Secs. 4.9.1; 4.11.3; 4.11.5 | 4.9.1; 4.11.3; 4.11.5 | 56 |
| 11.4 | Prevention Of Nonconforming Work | V1M2 Secs. 4.9.4; 4.11.2 | 4.9.2; 4.11.2 | 56 |
| 11.5 | Method Suspension / Restriction (Stop Work Procedures) | V1M2 Secs. 4.9.1; 4.9.2; 4.11.5 | 4.9.1; 4.9.2; 4.11.5 | 56 |
| 12.0 | CORRECTIVE ACTION | V1M2 Sec. 4.11 | | 57 |
| 12.1 | Overview | V1M2 Secs. 4.9.2; 4.11.1; 4.11.2 | 4.9.2; 4.11.1; 4.11.2 | 57 |
| 12.2 | General | V1M2 Sec. 4.11.2; 4.11.3 | 4.11.2; 4.11.3 | 57 |
| 12.3 | Closed Loop Corrective Action Process | V1M2 Sec. 4.11.2; 4.11.3; 4.11.4; 4.11.6; 4.11.7; 4.12.2 | 4.11.2; 4.11.3; 4.11.4; 4.12.2 | 58 |
| 12.4 | Technical Corrective Actions | V1M2 Sec. 4.11.6 | | 60 |
| 12.5 | Basic Corrections | V1M2 Secs. 4.11.1; 4.13.2.3 | 4.11.1; 4.13.2.3 | 61 |
| 13.0 | PREVENTIVE ACTION / IMPROVEMENT | V1M2 Secs. 4.10; 4.12.1; 4.12.2 | 4.10; 4.12.1; 4.12.2 | 65 |
| 13.1 | Overview | V1M2 Secs. 4.15.1; 4.15.2 | 4.15.1; 4.15.2 | 65 |
| 13.2 | Management Of Change | | | 66 |
| 14.0 | CONTROL OF RECORDS | V1M2 Secs. 4.2.7; 4.13.1.1; 4.13.3 | 4.2.7; 4.13.1.1 | 66 |
| 14.1 | Overview | V1M2 Secs. 4.13.1.1; 4.13.1.2; 4.13.1.3; 4.13.1.4; 4.13.2.1; 4.13.2.2; 4.13.2.3; 4.13.3 | 4.13.1.1; 4.13.1.2; 4.13.1.3; 4.13.1.4; 4.13.2.1; 4.13.2.2; 4.13.2.3 | 66 |
| 14.2 | Technical And Analytical Records | V1M2 Sec. 4.13.2.2 - 4.13.2.3 | 4.13.2.2; 4.13.2.3 | 70 |
| 14.3 | Laboratory Support Activities | | | 71 |
| 14.4 | Administrative Records | | | 72 |
| 14.5 | Records Management, Storage And Disposal | V1M2 Sec. 4.13.3 | | 72 |
| 15.0 | AUDITS | | | 73 |

| Sec. No. | Title | 2009 TNI Standard Reference | ISO/IEC 17025:2005 (E) Reference | Page No. |
|---|---|---|---|---|
| 15.1 | Internal Audits | V1M2 Sec. 4.2.8.1; 4.14; 4.14.1; 4.14.2 ; 4.14.3; 4.14.5; 5.9.1; 5.9.2 | 4.14.1; 4.14.2; 4.14.3; 5.9.1; 5.9.2 | 73 |
| 15.2 | External Audits | V1M2 Secs.4.14.2; 4.14.3 | 4.14.2; 4.14.3; 4.14.4 | 75 |
| 15.3 | Audit Findings | V1M2 Secs. 4.14.2; 4.14.3; 4.14.5 | | 76 |
| 16.0 | MANAGEMENT REVIEWS | V1M2 Sec. 4.1.6; 4.15; 4.15.1; 4.15.2 | 4.1.6; 4.15.1; 4.15.2 | 76 |
| 16.1 | Quality Assurance Report | | | 76 |
| 16.2 | Annual Management Review | V1M2 Sec. 4.2.2; 4.15.3 | 4.2.2 | 77 |
| 16.3 | Potential Integrity Related Managerial Reviews | | | 78 |
| 17.0 | PERSONNEL | V1M2 Secs. 5.2; 5.2.1 | 5.2.1 | 78 |
| 17.1 | Overview | V1M2 Secs. 5.2.2; 5.2.3; 5.2.5 | 5.2.2; 5.2.3; 5.2.5 | 78 |
| 17.2 | Education And Experience Requirements For Technical Personnel | V1M2 Secs. 5.2.1; 5.2.3; 5.2.4 | 5.2.1; 5.2.3; 5.2.4 | 79 |
| 17.3 | Training | V1M2 Sec. 5.2.5 | 5.2.5 | 80 |
| 17.4 | Data Integrity And Ethics Training Program | V1M2 Sec. 4.2.8.1; 5.2.7 | | 82 |
| 18.0 | ACCOMMODATIONS AND ENVIRONMENTAL CONDITIONS | V1M2 Sec. 5.3 | | 83 |
| 18.1 | Overview | V1M2 Secs. 5.3.1; 5.3.3; 5.3.4; 5.3.5 | 5.3.1; 5.3.3; 5.3.4; 5.3.5 | 83 |
| 18.2 | Environment | V1M2 Secs. 5.3.1; 5.3.2; 5.3.3; 5.3.4; 5.3.5 | 5.3.1; 5.3.2; 5.3.3; 5.3.4; 5.3.5 | 83 |
| 18.3 | Work Areas | V1M2 Secs. 5.3.3; 5.3.4; 5.3.5 | 5.3.3; 5.3.4; 5.3.5 | 84 |
| 18.4 | Floor Plan | | | 84 |
| 18.5 | Building Security | V1M2 Sec. 5.3.4 | 5.3.4 | 84 |
| 19.0 | TEST METHODS AND METHOD VALIDATION | V1M2 Sec. 5.4.1 | 5.4.1 | 73 |
| 19.1 | Overview | V1M2 Sec. 5.4.1 | 5.4.1; 5.4.5.1 | 85 |

| Sec. No. | Title | 2009 TNI Standard Reference | ISO/IEC 17025:2005 (E) Reference | Page No. |
|---|---|---|---|---|
| 19.2 | Standard Operating Procedures (Sops) | V1M2 Secs. 4.2.8.5; 4.3.3.1; 5.4.2 | 4.3.3.1; 5.4.2 | 85 |
| 19.3 | Laboratory Methods Manual | V1M2 Sec. 4.2.8.5 | | 85 |
| 19.4 | Selection Of Methods | V1M2 Secs. 4.13.3; 5.4.1; 5.4.2; 5.4.3. V1M4 Secs. 1.4; 1.5.1; 1.6.1; 1.6.2; 1.6.2.1; 1.6.2.2 | 5.4.1; 5.4.2; 5.4.3; 5.4.4; 5.4.5.1; 5.4.5.2; 5.4.5.3 | 86 |
| 19.5 | Laboratory Developed Methods And Non-Standard Methods | V1M2 Sec. 5.4.2. V1M4 Sec. 1.5.1 | 5.4.2; 5.4.4; 5.4.5.2; 5.4.5.3 | 89 |
| 19.6 | Validation Of Methods | V1M2 Sec. 5.4.2. V1M4 Secs. 1.5.1; 1.5.2; 1.5.2.1; 1.5.2.2; 1.5.3 | 5.4.2; 5.4.4; 5.4.5.2; 5.4.5.3 | 89 |
| 19.7 | Method Detection Limits (mdl) / Limits Of Detection (LOD) | V1M2 Sec. 5.9.3. V1M4 Secs. 1.5.2; 1.5.2.1; 1.5.2.2 | 5.4.5.3 | 90 |
| 19.8 | Instrument Detection Limits (Idl) | V1M2 Sec. 5.9.3 | | 91 |
| 19.9 | Verification Of Detection And Reporting Limits | V1M2 Sec. 5.9.3. V1M4 Sec. 1.5.2.1 | | 91 |
| 19.10 | Retention Time Windows | V1M2 Sec. 5.9.3 | | 92 |
| 19.11 | Evaluation Of Selectivity | V1M2 Sec. 5.9.3. V1M4 Sec. 1.5.4; 1.7.3.6 | | 92 |
| 19.12 | Estimation Of Uncertainty Of Measurement | V1M2 Sec. 5.1.1; 5.1.2; 5.4.6 | 5.1.1; 5.1.2; 5.4.6.1; 5.4.6.2; 5.4.6.3 | 92 |
| 19.13 | Sample Reanalysis Guidelines | V1M2 Sec 5.9.1 | 5.9.1 | 93 |
| 19.14 | Control Of Data | V1M2 Secs. 5.4.7.1; 5.4.7.2; 5.9.1 | 5.4.7.1; 5.4.7.2; 5.9.1 | 94 |
| 20.0 | EQUIPMENT AND CALIBRATIONS | V1M2 Secs. 5.5.4; 5.5.5; 5.5.6 | 5.5.4; 5.5.5; 5.5.6; 5.6.1 | 101 |
| 20.1 | Overview | V1M2 Secs. 5.5.1; 5.5.2; 5.5.3; 5.5.5; 5.5.10 | 5.5.1; 5.5.2; 5.5.3; 5.5.5; 5.5.10; 5.6.1 | 101 |
| 20.2 | Preventive Maintenance | V1M2 Secs. 5.5.1; 5.5.3; 5.5.7; 5.5.9 | 5.5.1; 5.5.3; 5.5.7; 5.5.9; 5.6.1 | 101 |
| 20.3 | Support Equipment | V1M2 Secs. 5.5.10; 5.5.11; 5.5.13.1 | 5.5.10; 5.5.11; 5.6.2.1.2; 5.6.2.2.1; 5.6.2.2.2 | 102 |

| Sec. No. | Title | 2009 TNI Standard Reference | ISO/IEC 17025:2005 (E) Reference | Page No. |
|---|---|---|---|---|
| 20.4 | Instrument Calibrations | V1M2 Secs. 5.5.8; 5.5.10; 5.6.3.1. V1M4 Sec. 1.7.1.1; 1.7.2 | 5.5.8; 5.5.9; 5.5.10; 5.6.1; 5.6.2; 5.6.3.1 | 105 |
| 20.5 | Tentatively Identified Compounds (TICS) – GC/MS Analysis | | | 108 |
| 20.6 | Gc/Ms Tuning | | | 108 |
| 21.0 | MEASUREMENT TRACEABILITY | | | 125 |
| 21.1 | Overview | V1M2 Sec. 5.6.3.1 | 5.6.2.1.2; 5.6.2.2.2; 5.6.3.1 | 125 |
| 21.2 | NIST-Traceable Weights And Thermometers | V1M2 Secs. 5.5.13.1; 5.6.3.1; 5.6.3.2 | 5.6.3.1; 5.6.3.2 | 125 |
| 21.3 | Reference Standards / Materials | V1M2 Secs. 5.6.3.1; 5.6.3.2; 5.6.3.3; 5.6.3.4; 5.6.4.1; 5.6.4.2; 5.9.1; 5.9.3 | 5.6.3.1; 5.6.3.2; 5.6.3.3; 5.6.3.4; 5.9.1 | 126 |
| 21.4 | Documentation And Labeling Of Standards, Reagents, And Reference Materials | V1M2 Secs. 5.6.4.2; 5.9.3 | | 127 |
| 22.0 | SAMPLING | | | 129 |
| 22.1 | Overview | V1M2 Secs. 5.7.1; 5.7.3 | 5.7.1; 5.7.3 | 129 |
| 22.2 | Sampling Containers | | | 129 |
| 22.3 | Definition Of Holding Time | | | 129 |
| 22.4 | Sampling Containers, Preservation Requirements, Holding Times | | | 130 |
| 22.5 | Sample Aliquots / Subsampling | V1M2 Sec. 5.7.1 | 5.7.1 | 130 |
| 23.0 | HANDLING OF SAMPLES | V1M2 Sec. 5.8.1 | 5.8.1 | 130 |
| 23.1 | Chain Of Custody (COC) | V1M2 Secs. 5.7.2; 5.7.4; 5.8.4; 5.8.7.5; 5.8.8; 5.9.1 | 5.7.2; 5.8.4; 5.9.1 | 130 |
| 23.2 | Sample Receipt | V1M2 Secs. 5.8.1; 5.8.2; 5.8.3; 5.8.5; 5.8.7.3; 5.8.7.4; 5.8.7.5 | 5.8.2; 5.8.3 | 132 |
| 23.3 | Sample Acceptance Policy | V1M2 Secs. 5.8.6; 5.8.7.2 | | 133 |
| 23.4 | Sample Storage | V1M2 Secs. 5.7.4; 5.8.4 | 5.8.4 | 134 |
| 23.5 | Hazardous Samples And Foreign Soils | | | 134 |
| 23.6 | Sample Shipping | V1M2 Sec. 5.8.2 | 5.8.2 | 135 |
| 23.7 | Sample Disposal | | | 135 |

| Sec. No. | Title | 2009 TNI Standard Reference | ISO/IEC 17025:2005 (E) Reference | Page No. |
|---|---|---|---|---|
| 24.0 | ASSURING THE QUALITY OF TEST RESULTS | | | 141 |
| 24.1 | Overview | V1M2 Secs. 5.9.2; 5.9.3 | 5.9.2 | 141 |
| 24.2 | Controls | V1M2 Secs. 5.9.2; 5.9.3 | 5.9.2 | 141 |
| 24.3 | Negative Controls | V1M2 Secs. 5.9.2; 5.9.3 V1M4 Secs. 1.7.3; 1.7.3.1; 1.7.4.1 | 5.9.2 | 141 |
| 24.4 | Positive Controls | V1M2 Secs 5.9.2; 5.9.3. V1M4 Secs. 1.7.3; 1.7.3.2; 1.7.3.2.1; 1.7.3.2.2; 1.7.3.2.3 | 5.9.2 | 143 |
| 24.5 | Sample Matrix Controls | V1M2 Secs. 5.9.2; 5.9.3. V1M4 Secs. 1.7.3 ; 1.7.3.3; 1.7.3.3.1; 1.7.3.3.2; 1.7.3.3.3 | 5.9.2 | 144 |
| 24.6 | Acceptance Criteria (Control Limits) | V1M2 Sec. 5.9.3. V1M4 Secs. 1.7.4.2; 1.7.4.3 | | 145 |
| 24.7 | Additonal Procedures To Assure Quality Control | V1M2 Sec. 5.9.3. V1M4 Sec. 1.7.3.4 | | 147 |
| 25.0 | REPORTING RESULTS | | | 147 |
| 25.1 | Overview | -V1M2 Secs. 5.10.1; 5.10.2; 5.10.8 | 5.10.1; 5.10.2; 5.10.8 | 147 |
| 25.2 | Test Reports | V1M2 Secs. 5.10.1; 5.10.2; 5.10.3.1; 5.10.3.2; 5.10.5; 5.10.6; 5.10.7; 5.10.8; 5.10.10; 5.10.11 | 5.10.1; 5.10.2; 5.10.3.1; 5.10.3.2; 5.10.5; 5.10.6; 5.10.7; 5.10.8 | 148 |
| 25.3 | Reporting Level Or Report Type | V1M2 Secs. 5.10.1; 5.10.7; 5.10.8 | 5.10.1; 5.10.7; 5.10.8 | 150 |
| 25.4 | Supplemental Information For Test | V1M2 Secs. 5.10.1; 5.10.3.1; 5.10.5 | 5.10.1; 5.10.3.1; 5.10.5 | 151 |
| 25.5 | Environmental Testing Obtained From Subcontractors | V1M2 Secs. 4.5.5; 5.10.1; 5.10.6 | 5.10.1; 5.10.6 | 152 |
| 25.6 | Client Confidentiality | V1M2 Secs. 4.1.5; 5.10.7 | 4.1.5; 5.10.7 | 152 |

| Sec. No. | Title | 2009 TNI Standard Reference | ISO/IEC 17025:2005 (E) Reference | Page No. |
|---|---|---|---|---|
| 25.7 | Format Of Reports | V1M2 Sec. 5.10.8 | 5.10.8 | 152 |
| 25.8 | Amendments To Test Reports | V1M2 Sec. 5.10.9 | 5.10.1; 5.10.9 | 153 |
| 25.9 | Policies On Client Requests For Amendments | V1M2 Secs. 5.9.1; 5.10.9 | 5.9.1; 5.10.1; 5.10.5; 5.10.9 | 153 |

# LIST OF TABLES


| Table No. | Title | 2009 TNI Standard Reference | ISO/IEC 17025:2005 (E) Reference | Page No. |
|---|---|---|---|---|
| 12-1 | Example – General Corrective Action Procedures | V1M2 Sec. 4.11.6. V1M4 Sec. 1.7.4.1 | 4.11.2 | 63 |
| 14-1 | Record Index | | 4.13.1.1 | 67 |
| 14-2 | Example: Special Record Retention Requirements | | | 69 |
| 15-1 | Types Of Internal Audits And Frequency | | 4.14.1 | 74 |
| 20-1 | Table 20-1. Example: Instrumentation List | | 5.5.4; 5.5.5 | 109 |
| 20-2 | Example: Schedule Of Routine Maintenance | | | 121 |
| 24-1 | Example – Negative Controls | | | 141 |
| 24-2 | Negative Controls For Microbiology | | | 142 |
| 24-3 | Sample Matrix Control | | | 144 |

# LIST OF FIGURES


| Figure No. | Title | 2009 TNI Standard Reference | ISO/IEC 17025:2005(E) Reference | Page No. |
|---|---|---|---|---|
| 4-1 | Corporate And Laboratory Organization Charts | V1M2 Sec. 4.1.5 | 4.1.3; 4.1.5; 4.2.6 | 31 |
| 8-1 | Example: Verification of Subcontract Lab Status Form | | | 48 |
| 12-1 | Example - Corrective Action Report | | | 62 |
| 19-1 | Example - Demonstration Of Capability Documentation | | | 99 |
| 19-2 | Example: Work Flow | | | 100 |
| 23-1 | Example: Chain Of Custody (COC) | | | 136 |
| 23-2 | Example: Sample Acceptance Policy | V1M2 Sec. 5.8.6; 5.8.7.1. V1M4 Sec. 1.7.5 | | 137 |
| 23-3 | Example: Cooler Receipt Form | | 5.8.3 | 140 |


# LIST OF APPENDICES


| Appendix No. | Title | Page No. |
|---|---|---|
| 1 | Laboratory Floor Plan | 154 |
| 2 | Glossary/Acronyms | 155 |
| 3 | Laboratory Certifications, Accreditations, Validations | 164 |

# REFERENCED CORPORATE SOPs AND POLICIES

| SOP / Policy Reference | Title |
|---|---|
| CA-Q-S-001 | Solvent and Acid Lot Testing and Approval |
| CA-Q-S-002 | Acceptable Manual Integration Practices |
| CW-Q-S-003 | Internal Auditing |
| CA-Q-S-006 | Detection Limits |
| CA-Q-S-008 | Management Systems Review |
| CW-Q-S-001 | Corporate Document Control and Archiving |
| CW-Q-S-002 | Writing a Standard Operating Procedure (SOPs) |
| CW-L-S-002 | Internal Investigation of Potential Data Discrepancies and Determination for Data Recall |
| CA-L-S-002 | Subcontracting Procedures |
| CW-L-P-004 | Ethics Policy |
| CA-L-P-002 | Contract Compliance Policy |
| CW-F-P-002 | Authorization Matrix |
| CW-F-P-004 | Procurement and Contracts Policy |
| CA-C-S-001 | Work Sharing Process |
| CA-T-P-001 | Qualified Products List |
| CW-F-S-007 | Controlled Purchases Policy |
| CA-Q-M-002 | Corporate Quality Management Plan |
| CW-E-M-001 | Corporate Environmental Health & Safety Manual |
| | |

# REFERENCED LABORATORY SOPs

| SOP Reference | Title |
|---|---|
| DV-QA-0010 | Document Control & Updating Procedures (Sec. 3.4.1) |
| DV-QA-013P | Customer Complaints ( Sec .10.1) |
| DV-QA-028P | Management of Change( Sec. 3.4.1; 13.2) |
| DV-QA-0005 | Document Archiving Procedure (Sec. 14.1.4) |
| DV-QA-0024 | Training (Sec. 17.3) |
| DV-QA-001P, | Preparation and Management of Standard Operating Procedures (Sec. 19.2) |
| DV-QA-0024 | Training (Sec. 19.4.2) |
| DV-QA-005P | Determination of Method Detection Limits (Sec. 19.7) |
| DV-QA-017P | Electronic Reporting (Sec. 19.14.1) |
| DV-QA-0023 | Subsampling (Sec. 22.5) |
| DV-QA-0003 | Sample Management and Chain of Custody (Sec. 23.2.1.3) |
| DV-QA-003P | Quality Assurance Program (Sec. 5.5, 23.2.1) |
| DV-QA-0010 | Document Control (Sec. 6.1) |
| DV-QA-001P | Preparation and Management of Standard Operating Procedures and Other Controlled Documents (Sec. 6.3) |
| DV-QA-0005 | Document Archiving Procedure (Sec. 6.4) |
| DV-QA-011P | Acceptable Manual Integration Practices (Sec. 19.14.2) |
| DV-QA-025P | Electronic Data Backup (Sec. 14.1.3) |

Section references are to the first occurrences only.

## SECTION 3. INTRODUCTION, SCOPE AND APPLICABILITY

### 3.1 Introduction and Compliance References

TestAmerica Denver Quality Assurance Manual (QAM) is a document prepared to define the overall policies, organization objectives and functional responsibilities for achieving TestAmerica's data quality goals. The laboratory maintains a local perspective in its scope of services and client relations and maintains a national perspective in terms of quality.

The QAM has been prepared to assure compliance with The NELAC Institute (TNI) Standard, dated 2009, Volume 1 Modules 2 and 4, and ISO/IEC Guide 17025:2005(E) In addition, the policies and procedures outlined in this manual are compliant with TestAmerica's Corporate Quality Management Plan (CQMP) and the various accreditation and certification programs

listed in Appendix 3. The CQMP provides a summary of TestAmerica's quality and data integrity system. It contains requirements and general guidelines under which all TestAmerica facilities shall conduct their operations.

The QAM has been prepared to be consistent with the requirements of the following documents:

- EPA 600/4-88/039, *Methods for the Determination of Organic Compounds in Drinking Water,* EPA, Revised July 1991.
- EPA 600/R-95/131, *Methods for the Determination of Organic Compounds in Drinking Water,* Supplement III, EPA, August 1995.
- EPA 600/4-79-019, *Handbook for Analytical Quality Control in Water and Wastewater Laboratories,* EPA, March 1979.
- *Test Methods for Evaluating Solid Waste Physical/Chemical Methods (SW846), Third Edition, September 1986, Final Update I, July 1992, Final Update IIA, August 1993, Final Update II, September 1994; Final Update IIB, January 1995; Final Update III, December 1996; Final Update IV, January 2008.*
- *U.S. Department of Defense, Quality Systems Manual for Environmental Laboratories, Version 4.2, October 2010.*
- Federal Register, 40 CFR Parts 136, 141, 172, 173, 178, 179 and 261.
- *Manual for the Certification of Laboratories Analyzing Drinking Water (EPA 815-R-05-004, January 2005) (DW labs only)*
- *Statement of Work for Inorganics & Organics Analysis, SOM and ISM, current versions, USEPA Contract Laboratory Program Multi-media, Multi-concentration.*
- APHA, *Standard Methods for the Examination of Water and Wastewater,* 18th Edition, 19th, 20th, 21st, and on-line Editions.
- *U.S. Department of Energy* Order 414.1B, *Quality Assurance*, Approved April 29, 2004.
- *U.S. Department of Energy* Order 414.1C, *Quality Assurance*, June 17, 2005.
- *U.S. Department of Energy*, *Quality Systems for Analytical Services*, Revision 2.8, January 2012.
- U.S. Department of Defense, *Air Force Center for Environmental Excellence Quality Assurance Project Plan (QAPP),* Version 4.0.02, May 2006.
- Nuclear Regulatory Commission (NRC) Quality Assurance Requirements.
- Marine Protection, Research, and Sanctuaries Act (MPRSA).
- Toxic Substances Control Act (TSCA).

## 3.2 Terms and Definitions

A Quality Assurance Program is a company-wide system designed to ensure that data produced by the laboratory conforms to the standards set by state and/or federal regulations. The program functions at the management level through company goals and management policies, and at the analytical level through Standard Operating Procedures (SOPs) and quality control. The TestAmerica program is designed to minimize systematic error, encourage constructive, documented problem solving, and provide a framework for continuous improvement within the organization.

Refer to Appendix 2 for the Glossary/Acronyms.

## 3.3 Scope / Fields of Testing

The laboratory analyzes a broad range of environmental and industrial samples every month. Sample matrices vary among air, drinking water, effluent water, groundwater, hazardous waste, sludge and soils. The Quality Assurance Program contains specific procedures and methods to test samples of differing matrices for chemical, physical parameters. The Program also contains guidelines on maintaining documentation of analytical processes, reviewing results, servicing clients and tracking samples through the laboratory. The technical and service requirements of all analytical requests are thoroughly evaluated before commitments are made to accept the work. Measurements are made using published reference methods or methods developed and validated by the laboratory.

The methods covered by this manual include the most frequently requested methodologies needed to provide analytical services in the United States and its territories. The specific list of test methods used by the laboratory can be found in Appendix 4. The approach of this manual is to define the minimum level of quality assurance and quality control necessary to meet these requirements. All methods performed by the laboratory shall meet these criteria as appropriate. In some instances, quality assurance project plans (QAPPs), project specific data quality objectives (DQOs) or local regulations may require criteria other than those contained in this manual. In these cases, the laboratory will abide by the requested criteria following review and acceptance of the requirements by the Laboratory Director and the Quality Assurance (QA) Manager. In some cases, QAPPs and DQOs may specify less stringent requirements. The Laboratory Director and the QA Manager must determine if it is in the lab's best interest to follow the less stringent requirements.

## 3.4 Management of the Manual

### 3.4.1 Review Process

The template on which this manual is based is reviewed annually by Corporate Quality Management Personnel to assure that it remains in compliance with Section 3.1. This manual itself is reviewed annually by senior laboratory management to assure that it reflects current practices and meets the requirements of the laboratory's clients and regulators as well as the CQMP. Occasionally, the manual may need changes in order to meet new or changing regulations and operations. The QA Manager will review the changes in the normal course of business and incorporate changes into revised sections of the document. All updates will be reviewed by the senior laboratory management staff. The laboratory updates and approves such changes according to our Document Control procedure (refer to SOP No. DV-QA-0010).

# SECTION 4. MANAGEMENT REQUIREMENTS

## 4.1 Overview

TestAmerica Denver is a local operating unit of TestAmerica Laboratories, Inc.. The organizational structure, responsibilities and authorities of the corporate staff of TestAmerica Laboratories, Inc. are presented in the CQMP. The laboratory has day-to-day independent operational authority overseen by corporate officers (e.g., President, Chief Operating Officer, Corporate Quality, etc.). The laboratory operational and support staff work under the direction of the Laboratory Director. The organizational structure for both Corporate & TestAmerica Denver is presented in Figure 4-1.

## 4.2 Roles and Responsibilities

In order for the Quality Assurance Program to function properly, all members of the staff must clearly understand and meet their individual responsibilities as they relate to the quality program. The following descriptions briefly define each role in its relationship to the Quality Assurance Program.

### 4.2.1 Additional Requirements for Laboratories

The responsibility for quality resides with every employee of the laboratory. All employees have access to the QAM, are trained to this manual, and are responsible for upholding the standards therein. Each person carries out his/her daily tasks in a manner consistent with the goals and in accordance with the procedures in this manual and the laboratory's SOPs. Role descriptions for Corporate personnel are defined in the CQMP. This manual is specific to the operations of TestAmerica's Denver laboratory.

### 4.2.2 Laboratory Director

TestAmerica Denver's Laboratory Director is responsible for the overall quality, safety, financial, technical, human resource and service performance of the whole laboratory and reports to their respective GM. The Laboratory Director provides the resources necessary to implement and maintain an effective and comprehensive Quality Assurance and Data Integrity Program.

Specific responsibilities include, but are not limited to:

- Provides one or more technical directors for the appropriate fields of testing. The name(s) of the Technical Director will be included in the national database. If the Technical Director is absent for a period of time exceeding 15 consecutive calendar days, the Laboratory Director must designate another full time staff member meeting the qualifications of the Technical Director to temporarily perform this function. If the absence exceeds 65 consecutive calendar days, the primary accrediting authority must be notified in writing. The role of the Technical Director at TestAmerica Denver is fulfilled by the Laboratory Director or appointed designee(s).

- Ensures that all analysts and supervisors have the appropriate education and training to properly carry out the duties assigned to them and ensures that this training has been documented.
- Ensures that personnel are free from any commercial, financial and other undue pressures which might adversely affect the quality of their work.
- Ensures TestAmerica's human resource policies are adhered to and maintained.
- Ensures that sufficient numbers of qualified personnel are employed to supervise and perform the work of the laboratory.
- Ensures that appropriate corrective actions are taken to address analyses identified as requiring such actions by internal and external performance or procedural audits. Procedures that do not meet the standards set forth in the QAM or laboratory SOPs may be temporarily suspended by the Laboratory Director.
- Reviews and approves all SOPs prior to their implementation and ensures all approved SOPs are implemented and adhered to.
- Pursues and maintains appropriate laboratory certification and contract approvals. Supports ISO 17025 requirements.
- Ensures client specific reporting and quality control requirements are met.
- Captains the management team, consisting of the QA Manager, the Technical Director(s), and the Operations Manager as direct reports.

### 4.2.3 Quality Assurance (QA) Manager or Designee

The QA Manager has responsibility and authority to ensure the continuous implementation of the quality system.

The QA Manager reports directly to the Laboratory Director and has access to Corporate QA for advice and resources. This position is able to evaluate data objectively and perform assessments without outside (e.g., managerial) influence. Corporate QA may be used as a resource in dealing with regulatory requirements, certifications and other quality assurance related items. The QA Manager directs the activities of the QA officers to accomplish specific responsibilities, which include, but are not limited to:

- Serves as the focal point for QA/QC in the laboratory.
- Having functions independent from laboratory operations for which he/she has quality assurance oversight.
- Maintaining and updating the QAM.
- Monitoring and evaluating laboratory certifications; scheduling proficiency testing samples.
- Monitoring and communicating regulatory changes that may affect the laboratory to management.
- Training and advising the laboratory staff on quality assurance/quality control procedures that are pertinent to their daily activities.

- Have documented training and/or experience in QA/QC procedures and the laboratory's Quality System.
- Having a general knowledge of the analytical test methods for which data audit/review is performed (and/or having the means of getting this information when needed).
- Arranging for or conducting internal audits on quality systems and the technical operation.
- The laboratory QA Manager will maintain records of all ethics-related training, including the type and proof of attendance.
- Maintain, improve, and evaluate the corrective action database and the corrective and preventive action systems.
- Notifying laboratory management of deficiencies in the quality system and ensuring corrective action is taken. Procedures that do not meet the standards set forth in the QAM or laboratory SOPs shall be investigated following procedures outlined in Section 12 and if deemed necessary may be temporarily suspended during the investigation.
- Objectively monitor standards of performance in quality control and quality assurance without outside (e.g., managerial) influence.
- Coordinating of document control of SOPs, MDLs, control limits, and miscellaneous forms and information.
- Review a percentage of all final data reports for internal consistency. Review of Chain of Custody (COC), correspondence with the analytical request, batch QC status, completeness of any corrective action statements, 5% of calculations, format, holding time, sensibility and completeness of the project file contents.
- Review of external audit reports and data validation requests.
- Follow-up with audits to ensure client QAPP requirements are met.
- Establishment of reporting schedule and preparation of various quality reports for the Laboratory Director, clients and/or Corporate QA.
- Development of suggestions and recommendations to improve quality systems.
- Research of current state and federal requirements and guidelines.
- Captains the QA team to enable communication and to distribute duties and responsibilities.
- Ensuring Communication & monitoring standards of performance to ensure that systems are in place to produce the level of quality as defined in this document.
- Notifying laboratory management of deficiencies in the quality system and ensuring corrective action is taken. Procedures that do not meet the standards set forth in the QAM or laboratory SOPs are temporarily suspended following the procedures outlined in Section 12.
- Evaluation of the thoroughness and effectiveness of training.
- Compliance with ISO 17025.

### 4.2.4 Quality Assurance Specialist

The Quality Assurance Specialist performs several roles. The QA Specialist reports to the facility QA Manager. The QA Specialist is responsible for QA documentation and involvement in the following activities:

- Assist the QA Manager in performing the annual internal laboratory audits, compiling the evaluation, and coordinating the development of an action plan to address any deficiency identified.
- Facilitate external audits, coordinating with the QA Manager and Laboratory Staff to address any deficiencies noted at the time of the audit and subsequently presented in the final audit report.
- Assist the QA Manager in the preparation of new SOP's and in the maintenance of existing SOPs, coordinating annual reviews and updates.
- Manages the performance testing (PT) studies, coordinates follow up studies for failed analytes and works with QA Manager and Laboratory Staff to complete needed corrective action reports.
- Personnel training records review and maintenance.
- Document control maintenance.
- Assists the Quality Manager and Project Management Group in the review of program plans for consistency with organizational and contractual requirements. Summarize and convey to appropriate personnel anomalies or inconsistencies observed in the review process.
- Manages certifications and accreditations.
- Monitors for compliance the following QA Metrics: Temperature Monitoring of refrigeration units and incubators; thermometer calibrations; balance calibrations; eppendorf/pipette calibrations; and proper standard/reagent storage.
- Periodic checks on the proper use and review of instrument logs.
- Initiate the Mint-miner data file review process for organic instrumentation. Maintain tracking sheet of activity.
- Initiate the annual Instrument review.
- Assist in the technical review of data packages which require QA review.

### 4.2.5 Quality Assurance Assistant

The Quality Assurance Assistant performs several roles. The QA Assistant reports to the facility QA Manager. The QA Assistant is responsible for QA documentation and involvement in the following activities:

- Assist the QA Manager in performing the annual internal laboratory audits, compiling the evaluation, and coordinating the development of an action plan to address any deficiency identified.

- Serves as a project manager for proficiency testing samples and other QC samples. Processes and reports QC samples as routine samples to appropriate agencies.
- Assist the QA Manager in maintaining the laboratory's reference data to keep it current and accurate.
- Prepares certification applications for states as directed by QA Manager.
- Personnel training records review and maintenance.
- Document control maintenance.
- Assisting departments in generating MDL spreadsheets and calculations, reviewing MDL studies submitted to QA.
- Assisting in control limit generation.
- Ensuring maintenance of records archives.
- Maintaining historical indices for all technical records including SOPs, QC records, laboratory data, etc.

### 4.2.6 Technical Manager or Designee

The Technical Manager(s) report(s) directly to the Operations Manager. He/she is accountable for all analyses and analysts under their experienced supervision and for compliance with the ISO 17025 Standard. The scope of responsibility ranges from the new-hire process and existing technology through the ongoing training and development programs for existing analysts and new instrumentation. Specific responsibilities include, but are not limited to:

- Exercises day-to-day supervision of laboratory operations for the appropriate field of accreditation and reporting of results.
- Coordinating, writing, and reviewing preparation of all test methods, i. e., SOPs, with regard to quality, integrity, regulatory and optimum and efficient production techniques, and subsequent analyst training and interpretation of the SOPs for implementation and unusual project samples. He/she insures that the SOPs are properly managed and adhered to at the bench. He/she develops standard costing of SOPs to include supplies, labor, overhead, and capacity (design vs. demonstrated versus first-run yield) utilization.
- Reviewing and approving, with input from the QA Manager, proposals from marketing, in accordance with an established procedure for the review of requests and contracts. This procedure addresses the adequate definition of methods to be used for analysis and any limitations, the laboratory's capability and resources, the client's expectations. Differences are resolved before the contract is signed and work begins. A system documenting any significant changes is maintained, as well as pertinent discussions with the client regarding their requirements or the results of the analyses during the performance of the contract. All work subcontracted by the laboratory must be approved by the client. Any deviations from the contract must be disclosed to the client. Once the work has begun, any amendments to the contract must be discussed with the client and so documented.
- Monitoring the validity of the analyses performed and data generated in the laboratory. This activity begins with reviewing and supporting all new business contracts, insuring data

quality, analyzing internal and external non-conformances to identify root cause issues and implementing the resulting corrective and preventive actions, facilitating the data review process (training, development, and accountability at the bench), and providing technical and troubleshooting expertise on routine and unusual or complex problems.

- Providing training and development programs to applicable laboratory staff as new hires and, subsequently, on a scheduled basis. Training includes instruction on calculations, instrumentation management to include troubleshooting and preventive maintenance.
- Enhancing efficiency and improving quality through technical advances and improved LIMS utilization. Capital forecasting and instrument life cycle planning for second generation methods and instruments as well as asset inventory management.
- Coordinating sample management from "cradle to grave," insuring that no time is lost in locating samples.
- Scheduling all QA/QC-related requirements for compliance, e.g., MDLs, etc..
- Captains department personnel to communicate quality, technical, personnel, and instrumental issues for a consistent team approach.
- Coordinates audit responses with the QA Manager.

### 4.2.7 Operations Manager

The Operations Manager manages and directs the analytical production sections of the laboratory. He/She reports directly to the Laboratory Director. He/She acts as the Technical Director in determining the most efficient instrument utilization. More specifically, he/she:

- Evaluates the level of internal/external non-conformances for all departments.
- Continuously evaluates production capacity and improves capacity utilization.
- Continuously evaluates turnaround time and addresses any problems that may hinder meeting the required and committed turnaround time from the various departments.
- Develops and improves the training of all analysts in cooperation with the Technical Director and QA Manager and in compliance with regulatory requirements.
- Is responsible for efficient utilization of supplies.
- Constantly monitors and modifies the processing of samples through the departments.
- Fully supports the quality system and, if called upon in the absence of the QA Manager, serves as his substitute in the interim.

### 4.2.8 Radiation Safety Officer

The Radiation Safety Officer (RSO) is responsible for implementing TestAmerica Denver's radiation safety program. The RSO reports directly to the Technical Director. The RSO's duties consist of:

- Manage the personnel radiation dosimetry program
- Maintains the Radioactive Materials License and radionuclide inventory

- Monitors laboratory operation for compliance with the Radiation Safety Manual
- Training, documenting, and evaluating the TestAmerica Denver personnel for handling radioactive material
- Creating, releasing, and decontaminating of Radiological Control Areas (RCAs)
- Monitoring and tracking of radioactive materials
- Conducting the radioactive material waste disposal program in accordance with State and Federal regulations
- Maintaining all records related to the radiation safety program

### 4.2.9 Employee Health and Safety Coordinator

The EH&S Coordinator is responsible for administering the EH&S program that provides a safe, healthy working environment for all employees and the environment. The Employee Health and Safety Coordinator (EH&S Coordinator) reports directly to the Laboratory Director and the corporate Environmental Health and Safety Director. He/She monitors all areas for unsafe conditions, acts, and potential hazards. Specific responsibilities include, but are not limited to:

- Staying current with the hazardous waste regulations
- Continuing training on hazardous waste issues
- Reviewing and updating annually the Hazardous Waste Contingency Plan in the Environmental Health & Safety Manual.
- Auditing the staff with regard to compliance with the Hazardous Waste Contingency Plan
- Contacting the hazardous waste subcontractors for review of procedures and opportunities for minimization of waste
- Conduct ongoing, necessary safety training and conduct new employee safety orientation.
- Assist in developing and maintaining the Chemical Hygiene/Safety Manual.
- Administer dispersal of all Material Safety Data Sheet (MSDS) information.
- Perform regular chemical hygiene and housekeeping instruction.
- Give instruction on proper labeling and practice.
- Serve as chairman of the laboratory safety committee.
- Provide and train personnel on protective equipment.
- Oversee the inspection and maintenance of general safety equipment – fire extinguishers, safety showers, eyewash fountains, etc. and ensure prompt repairs as needed.
- Supervise and schedule fire drills and emergency evacuation drills.
- Determine what initial and subsequent exposure monitoring, if necessary to determine potential employee exposure to chemicals used in the laboratory.
- When determined necessary, conduct exposure monitoring assessments.

- Determine when a complaint of possible over-exposure is “reasonable” and should be referred for medical consultation.
- Assist in the internal and external coordination of the medical consultation/monitoring program conducted by TestAmerica’s medical consultants.

### 4.2.10 Hazardous Waste Specialist

The Hazardous Waste Specialist is responsible for coordinating and implementing the divisional hazardous waste program to ensure compliance with all federal, state, local laws, and company policies. The Hazardous waste specialist reports to the EH&S Coordinator. The duties consist of:

- Staying current with the hazardous waste regulations
- Conducts weekly inspections of satellite accumulation areas and all hazardous waste storage areas
- Operates and maintains on-site wastewater treatment system
- Coordinates the proper storage, packing and disposal of laboratory wastes according to Department of Transportation (DOT) and Resource Conservation and Recovery Act (RCRA) regulations
- Maintains waste disposal records
- Coordinates spill response activities including documentation for waste storage areas

### 4.2.11 Waste Disposal Technician

The Waste Disposal Technician is responsible for proper disposal of spent chemicals, process waste, and unused laboratory samples used in the laboratory according to corporate, federal, state, and local guidelines. The Waste Disposal Technician reports to the Hazardous Waste Specialist and EH&S Coordinator. The duties consist of:

- Packaging hazardous waste for transport per DOT, RCRA and TSCA guidelines
- Identifying waste streams and maintaining satellite accumulation areas
- Packages expired chemicals for shipment or disposal
- Tracks volume of waste generated for reporting to corporate and EPA
- Prepares and tracks implementation of the Waste Minimization Plan
- Empties satellite containers into bulk containers and returns to the laboratory for reuse

### 4.2.12 Department Manager

Department Managers report to the Operations Manager. At TestAmerica Denver there are two levels of Department Managers (I or II). The level designation is based on the level of experience. Each one is responsible to:

- Ensure that analysts in their department adhere to applicable SOPs and the QA Manual. They perform frequent SOP and QA Manual review to determine if analysts are in

compliance and if new, modified, and optimized measures are feasible and should be added to these documents.

- With regard to analysts, participates in the selection, training, development of performance objectives and standards of performance, appraisal (measurement of objectives), scheduling, counseling, discipline, and motivation of analysts and documents these activities in accordance with systems developed by the QA and Personnel Departments. They evaluate staffing sufficiency and overtime needs. Training consists of familiarization with SOP, QC, Safety, and computer systems.
- Encourage the development of analysts to become cross-trained in various methods and/or operate multiple instruments efficiently while performing maintenance and documentation, self-supervise, and function as a department team.
- Provide guidance to analysts in resolving problems encountered daily during sample prep/analysis in conjunction with the Technical Director, Operations Manager, and/or QA Manager. Each is responsible for 100% of the data review and documentation, non-conformance and CPAR issues, the timely and accurate completion of performance evaluation samples and MDLs, for his department.
- Ensure all logbooks are maintained, current, and properly labeled or archived.
- Report all non-conformance conditions to the QA Manager, Technical Director, Operations Manager, and/or Laboratory Director.
- Ensure that preventive maintenance is performed on instrumentation as detailed in the QA Manual or SOPs. He/She is responsible for developing and implementing a system for preventive maintenance, troubleshooting, and repairing or arranging for repair of instruments.
- Maintain adequate and valid inventory of reagents, standards, spare parts, and other relevant resources required to perform daily analysis.
- Achieve optimum turnaround time on analyses and compliance with holding times.
- Conduct efficiency and cost control evaluations on an ongoing basis to determine optimization of labor, supplies, overtime, first-run yield, capacity (designed vs. demonstrated), second- and third-generation production techniques/instruments, and long-term needs for budgetary planning.
- Develop, implement, and enhance calibration programs.
- Provide written responses to external and internal audit issues.

### 4.2.13 Laboratory Analysts

Laboratory analysts are responsible for conducting analysis and performing all tasks assigned to them by the group leader or supervisor. The Analyst position at TestAmerica Denver is divided into levels. These levels range from Analyst I to Analyst V. The level designation is based on experience, expertise, and responsibilities. The responsibilities of the analysts are listed below:

- Perform analyses by adhering to analytical and quality control protocols prescribed by current SOPs, this QA Manual, and project-specific plans honestly, accurately, timely, safely, and in the most cost-effective manner.
- Document standard and sample preparation, instrument calibration and maintenance, data calculations, sample matrix effects, and any observed non-conformance on worklists, benchsheets, lab notebooks and/or the Non-Conformance Database
- Report all non-conformance situations, instrument problems, matrix problems and QC failures, which might affect the reliability of the data, to their supervisor, the Technical Director, and/or the QA Manager or member of QA staff.
- Perform 100% review of the data generated prior to entering and submitting for secondary level review.
- Suggest method improvements to their supervisor, the Technical Director, and the QA Manager. These improvements, if approved, will be incorporated. Ideas for the optimum performance of their assigned area, for example, through the proper cleaning and maintenance of the assigned instruments and equipment, are encouraged.
- Work cohesively as a team in their department to achieve the goals of accurate results, optimum turnaround time, cost effectiveness, cleanliness, complete documentation, and personal knowledge of environmental analysis.

### 4.2.14 Laboratory Technician

Laboratory Technicians are responsible for the preparation of samples and performing all tasks assigned to them by the group leader or supervisor. The Laboratory Technician position at TestAmerica Denver is divided into three levels. These levels are Laboratory Technician I, Laboratory Technician II, and Laboratory Technician III. The level designation is based on experience, expertise, and responsibilities. The responsibilities of the Laboratory Technician are listed below:

- Retrieving samples from Sample Control for analysis
- Performing sample preparation by adhering to analytical and quality control protocols prescribed by current SOPs, this QA Manual, and project-specific plans honestly, accurately, timely, safely, and in the most cost-effective manner.
- Documenting standard and sample preparation, sample matrix effects, and any observed non-conformance on worklists, benchsheets, lab notebooks and/or the Non-Conformance Database
- Report all non-conformance situations, sample preparation problems, matrix problems and QC failures, which might affect the reliability of the data, to their supervisor, the Technical Director, and/or the QA Manager or member of QA staff.
- Work cohesively as a team in their department to achieve the goals of accurate results, optimum turnaround time, cost effectiveness, cleanliness, complete documentation, and personal knowledge of environmental analysis.

### 4.2.15 Laboratory Assistant

The Laboratory Assistant position is an entry-level position to learn basic laboratory technician skills. The Laboratory Assistant reports to their group leader or supervisor. The Laboratory Assistants duties include the following:

- Assisting the Laboratory Technicians in preparation of samples for analysis
- Preparing routine forms and reports
- Collecting and preparing materials and supplies for the laboratory
- Assisting technicians in conducting routine analysis.

### 4.2.16 Sample Control Manager

The Sample Control Manager reports to the Project Management Manager. The responsibilities are outlined below:

- Direct the logging of incoming samples into the LIMS
- Ensure the verification of data entry from login
- Provide daily assessments of sample receipts
- Monitor the preparation and shipment of bottle kits to clients
- Oversee the receipt, log in, and storage of samples
- Schedules couriers for sample pickup from customer sites

### 4.2.17 Sample Control Technician

The Sample Control Technician reports to the Sample Control Manager. The Sample Control Technician position at TestAmerica Denver is divided into levels. These levels range from Sample Control Technician I to Sample Control Technician IV. The level designation is based on experience and responsibilities of the Technician. The Sample Control Technician responsibilities include the following:

- Receive and unload samples or consignments in accordance with DOT regulations
- Verify samples against the Chain of Custody (COC)
- Log in sample into the LIMS to assign a lot number for tracking purposes and distribute the paperwork to the Project Managers and Department Managers
- Label samples with lot number assigned and deliver the samples to the appropriate labs for analysis daily
- Monitor freezer and cooler temperatures daily to confirm that the readings are within SOP guidelines
- Ship all subcontracted samples to designated lab in accordance with DOT regulations as needed

### 4.2.18 Shipping/Maintenance Technician

The Shipping/Maintenance Technician reports to the Sample Control Manager and the Project Management Manager. The Shipping/Maintenance Technician duties include the following:

- Maintaining the inventory control system
- Receiving and distributing incoming supplies
- Preparing and shipping bottle sampling kits to clients or on-site crews
- Maintaining bottle and cooler inventory
- Packing in-house samples for shipment to other laboratories

### 4.2.19 Courier

The Courier reports to the Sample Control Manager and the Project Management Manager. The Courier's duties include the following:

- Picking up and delivering samples and reports to clients and the laboratory
- Receiving and signing the chain of custody for samples
- Preparing and shipping bottle sampling kits to clients or on-site crews
- Performing preventative maintenance on company vehicles

### 4.2.20 Project Management Manager

The Project Management Manager reports to the Laboratory Director and serves as the interface between the laboratory's technical departments and the laboratory's clients. The staff consists of the Project Management team. With the overall goal of total client satisfaction, the functions of this position are outlined below:

- Technical training and growth of the Project Management team
- Technical liaison for the Project Management team
- Human resource management of the Project Management team
- Responsible to ensure that clients receive the proper sampling supplies
- Accountable for response to client inquiries concerning sample status
- Responsible for assistance to clients regarding the resolution of problems concerning COC
- Ensuring that client specifications, when known, are met by communicating project and quality assurance requirements to the laboratory
- Notifying the supervisors of incoming projects and sample delivery schedules
- Accountable to clients for communicating sample progress in daily status meeting with agreed-upon due dates
- Responsible for discussing with client any project-related problems, resolving service issues, and coordinating technical details with the laboratory staff

- Responsible for staff familiarization with specific quotes, sample log-in review, and final report completeness
- Monitor the status of all data package projects in-house to ensure timely and accurate delivery of reports
- Inform clients of data package-related problems and resolve service issues
- Coordinate requests for sample containers and other services (data packages)

### 4.2.21 Project Manager

The Project Managers report to the Project Management Manager and serve as liaisons between the laboratory and its clients. At TestAmerica Denver there are two levels of Project Managers (I or II). The level designation is based on experience, expertise, and responsibilities. The Project Manager's responsibilities include:

- Ensuring client specifications are met by communicating project and quality assurance requirements to the laboratory
- Notifying laboratory personnel of incoming projects and sample delivery schedules
- Monitoring the status of all projects in-house to ensure timely delivery of reports
- Informing clients of project-related problems, resolving service issues and coordinating technical issues with the laboratory staff
- Coordinating client requests for sample containers and other services
- Scheduling sample pick-ups from client offices or project sites and notifying the laboratory staff of incoming samples.
- Coordinating subcontract work
- Assisting clients in procuring the proper sampling supplies
- Responding to client inquiries concerning sample status
- Assisting clients with resolution of problems concerning Chains-of-Custody

### 4.2.22 Project Management Assistant

The Project Management Assistant reports to the Project Management Manager and designated Project Manager. The Project Management Assistant assists the Project Manager in servicing the client's needs and communicating those needs to the laboratory. The Project Management Assistant's responsibilities include:

- Collating data reports, expanded deliverables, CLP data packages and electronic data deliverables (EDD's) for delivery to clients.
- Writing case narratives accompanying data packages to communicate anomalies to clients
- Entering data from subcontracted laboratories
- Proof reading and filing data reports received from the laboratory

- Assisting Project Managers in changing compound lists, TAT, and setting up tables in Word or Excel
- Monitoring report due dates for timely delivery
- Invoicing completed data packages
- Generating credit or debit invoices to ensure proper payment
- Copying and paginating reports

### 4.3 DEPUTIES

The following table defines who assumes the responsibilities of key personnel in their absence:

| Key Personnel | Deputy |
|---|---|
| Robert C. Hanisch<br>Laboratory Director | Brett VanDelinder<br>Customer Service Manager |
| John Morris<br>Quality Manager | Peggy Sleevi<br>Quality Assurance Specialist |
| Adam Alban<br>EHS Coordinator | Chad Lancaster<br>Waste Control Specialist |
| Brett VanDelinder<br>Customer Service Manager | Pat McEntee<br>Program Support Manager |
| Karen Kuoppala<br>Operations Manager | William Rhodes<br>VOA GC/MS Manager |

**Figure 4-1. Corporate and Laboratory Organization Charts**

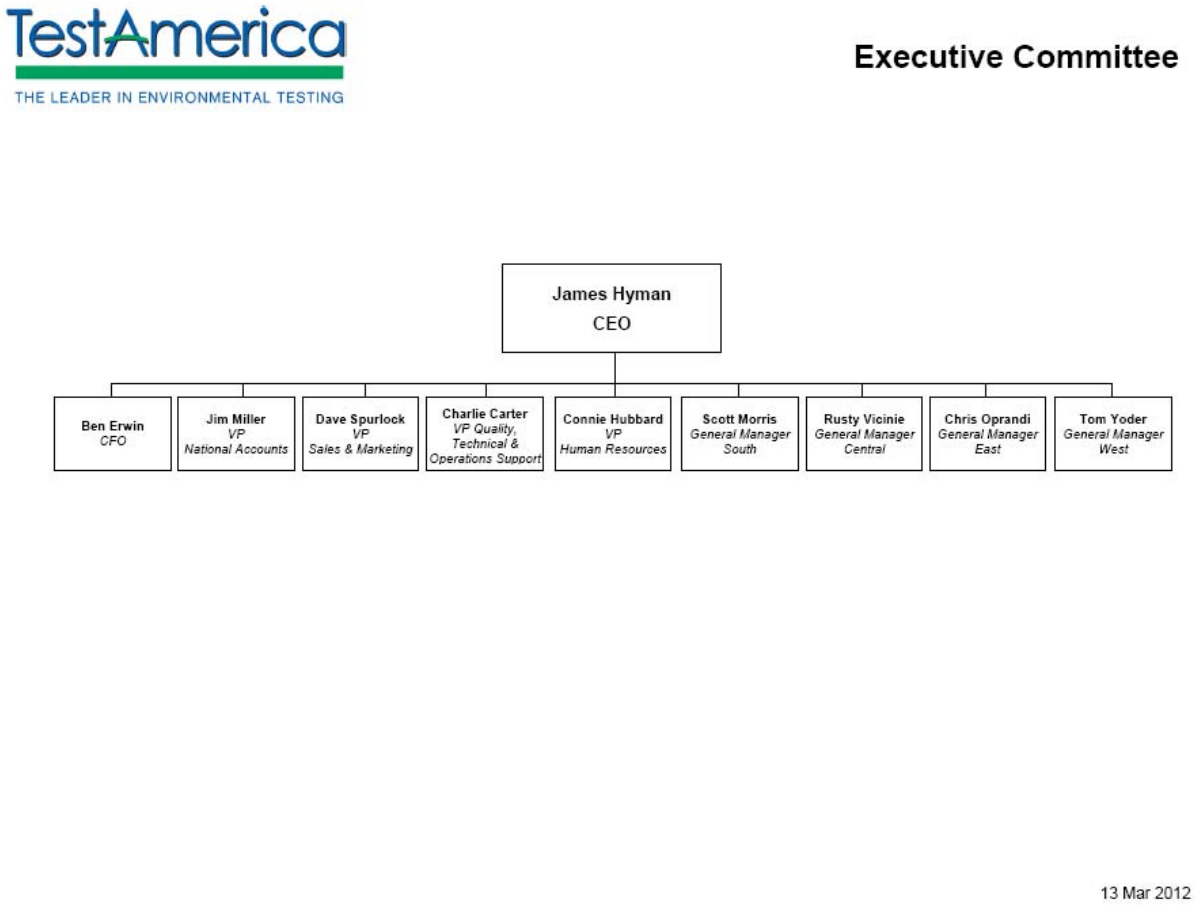

**Figure 4-1. Corporate and Laboratory Organization Charts – con't**

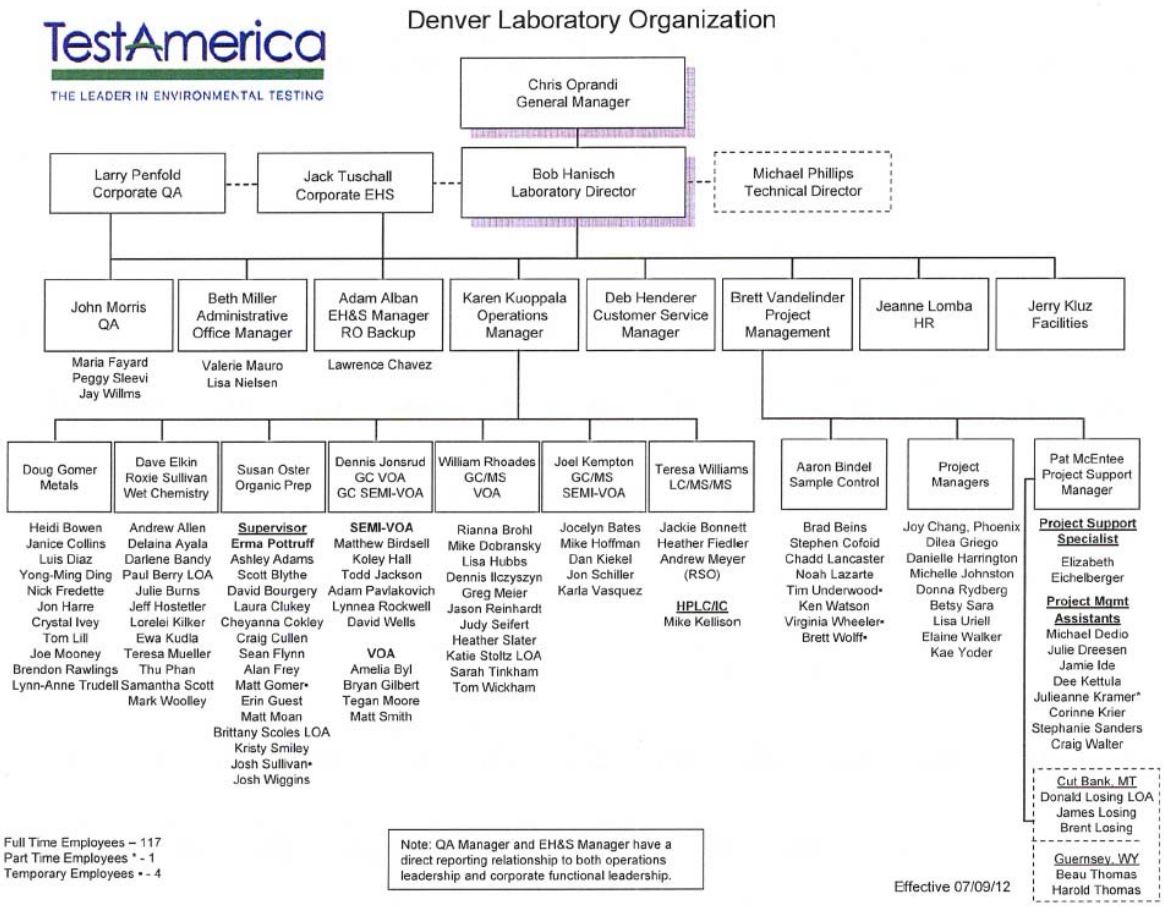

# SECTION 5. QUALITY SYSTEM

## 5.1 Quality Policy Statement

It is TestAmerica's Policy to:

- Provide data of known quality to its clients by adhering to approved methodologies, regulatory requirements and the QA/QC protocols.
- Effectively manage all aspects of the laboratory and business operations by the highest ethical standards.
- Continually improve systems and provide support to quality improvement efforts in laboratory, administrative and managerial activities. TestAmerica recognizes that the implementation of a quality assurance program requires management's commitment and support as well as the involvement of the entire staff.
- Provide clients with the highest level of professionalism and the best service practices in the industry.
- To comply with the ISO/IEC 17025:2005(E) International Standard, the 2009 TNI Standard and to continually improve the effectiveness of the management system.
- Every staff member at the laboratory plays an integral part in quality assurance and is held responsible and accountable for the quality of their work. It is, therefore, required that all laboratory personnel are trained and agree to comply with applicable procedures and requirements established by this document.

## 5.2 Ethics and Data Integrity

TestAmerica is committed to ensuring the integrity of its data and meeting the quality needs of its clients. The elements of TestAmerica's Ethics and Data Integrity Program include:

- An Ethics Policy (Corporate Policy No. CW-L-P-004) and Employee Ethics Statements.
- Ethics and Compliance Officers (ECOs).
- A Training Program.
- Self-governance through disciplinary action for violations.
- A Confidential mechanism for anonymously reporting alleged misconduct and a means for conducting internal investigations of all alleged misconduct. (Corporate SOP No. CW-L-S-002.)
- Procedures and guidance for recalling data if necessary (Corporate SOP No. CW-L-S-002).
- Effective external and internal monitoring system that includes procedures for internal audits (Section 15).

- Produce results, which are accurate and include QA/QC information that meets client pre-defined Data Quality Objectives (DQOs).
- Present services in a confidential, honest and forthright manner.
- Provide employees with guidelines and an understanding of the Ethical and Quality Standards of our Industry.
- Operate our facilities in a manner that protects the environment and the health and safety of employees and the public.
- Obey all pertinent federal, state and local laws and regulations and encourage other members of our industry to do the same.
- Educate clients as to the extent and kinds of services available.
- Assert competency only for work for which adequate personnel and equipment are available and for which adequate preparation has been made.
- Promote the status of environmental laboratories, their employees, and the value of services rendered by them.

## 5.3 Quality System Documentation

The laboratory's Quality System is communicated through a variety of documents.

- Quality Assurance Manual – Each laboratory has a lab-specific quality assurance manual.
- Corporate SOPs and Policies – Corporate SOPs and Policies are developed for use by all relevant laboratories. They are incorporated into the laboratory's normal SOP distribution, training and tracking system. Corporate SOPs may be general or technical.
- Work Instructions – A subset of procedural steps, tasks or forms associated with an operation of a management system (e.g., checklists, preformatted bench sheets, forms).
- Laboratory SOPs – General and Technical
- Laboratory QA/QC Policy Memorandums

### 5.3.1 Order of Precedence

In the event of a conflict or discrepancy between policies, the order of precedence is as follows:

- Corporate Quality Management Plan (CQMP)
- Corporate SOPs and Policies
- Laboratory QA/QC Policy Memorandum
- Laboratory Quality Assurance Manual (QAM)
- Laboratory SOPs and Policies
- Other (Work Instructions (WI), memos, flow charts, etc.)

Note: The laboratory has the responsibility and authority to operate in compliance with regulatory requirements of the jurisdiction in which the work is performed. Where the CQMP conflicts with those regulatory requirements, the regulatory requirements of the jurisdiction shall hold primacy. The laboratory's QAM shall take precedence over the CQMP in those cases.

## 5.4 QA/QC Objectives for the Measurement of Data

Quality Assurance (QA) and Quality Control (QC) are activities undertaken to achieve the goal of producing data that accurately characterize the sites or materials that have been sampled. Quality Assurance is generally understood to be more comprehensive than Quality Control. Quality Assurance can be defined as the integrated system of activities that ensures that a product or service meets defined standards.

Quality Control is generally understood to be limited to the analyses of samples and to be synonymous with the term *"analytical quality control"*. QC refers to the routine application of statistically based procedures to evaluate and control the accuracy of results from analytical measurements. The QC program includes procedures for estimating and controlling precision and bias and for determining reporting limits.

Request for Proposals (RFPs) and Quality Assurance Project Plans (QAPP) provide a mechanism for the client and the laboratory to discuss the data quality objectives in order to ensure that analytical services closely correspond to client needs. The client is responsible for developing the QAPP. In order to ensure the ability of the laboratory to meet the Data Quality Objectives (DQOs) specified in the QAPP, clients are advised to allow time for the laboratory to review the QAPP before being finalized. Additionally, the laboratory will provide support to the client for developing the sections of the QAPP that concern laboratory activities.

Historically, laboratories have described their QC objectives in terms of precision, accuracy, representativeness, comparability, completeness, selectivity and sensitivity (PARCCSS).

### 5.4.1 Precision

The laboratory objective for precision is to meet the performance for precision demonstrated for the methods on similar samples and to meet data quality objectives of the EPA and/or other regulatory programs. Precision is defined as the degree of reproducibility of measurements under a given set of analytical conditions (exclusive of field sampling variability). Precision is documented on the basis of replicate analysis, usually duplicate or matrix spike (MS) duplicate samples.

### 5.4.2 Accuracy

The laboratory objective for accuracy is to meet the performance for accuracy demonstrated for the methods on similar samples and to meet data quality objectives of the EPA and/or other regulatory programs. Accuracy is defined as the degree of bias in a measurement system. Accuracy may be documented through the use of laboratory control samples (LCS) and/or MS. A statement of accuracy is expressed as an interval of acceptance recovery about the mean recovery.

### 5.4.3 Representativeness

The laboratory objective for representativeness is to provide data which is representative of the sampled medium. Representativeness is defined as the degree to which data represent a characteristic of a population or set of samples and is a measurement of both analytical and field sampling precision. The representativeness of the analytical data is a function of the procedures used in procuring and processing the samples. The representativeness can be documented by the relative percent difference between separately procured, but otherwise identical samples or sample aliquots.

The representativeness of the data from the sampling sites depends on both the sampling procedures and the analytical procedures. The laboratory may provide guidance to the client regarding proper sampling and handling methods in order to assure the integrity of the samples.

### 5.4.4 Comparability

The comparability objective is to provide analytical data for which the accuracy, precision, representativeness and reporting limit statistics are similar to these quality indicators generated by other laboratories for similar samples, and data generated by the laboratory over time.

The comparability objective is documented by inter-laboratory studies carried out by regulatory agencies or carried out for specific projects or contracts, by comparison of periodically generated statements of accuracy, precision and reporting limits with those of other laboratories.

### 5.4.5 Completeness

The completeness objective for data is 90% (or as specified by a particular project), expressed as the ratio of the valid data to the total data over the course of the project. Data will be considered valid if they are adequate for their intended use. Data usability will be defined in a QAPP, project scope or regulatory requirement. Data validation is the process for reviewing data to determine its usability and completeness. If the completeness objective is not met, actions will be taken internally and with the data user to improve performance. This may take the form of an audit to evaluate the methodology and procedures as possible sources for the difficulty or may result in a recommendation to use a different method.

### 5.4.6 Selectivity

Selectivity is defined as: The capability of a test method or instrument to respond to a target substance or constituent in the presence of non-target substances. Target analytes are separated from non-target constituents and subsequently identified/detected through one or more of the following, depending on the analytical method: extractions (separation), digestions (separation), interelement corrections (separation), use of matrix modifiers (separation), specific retention times (separation and identification), confirmations with different columns or detectors (separation and identification), specific wavelengths (identification), specific mass spectra (identification), specific electrodes (separation and identification), etc..

### 5.4.7 Sensitivity

Sensitivity refers to the amount of analyte necessary to produce a detector response that can be reliably detected (Method Detection Limit) or quantified (Reporting Limit). Other terms may be used to reflect the method detection limit or reporting limit for specific programs.

## 5.5 Criteria for Quality Indicators

The laboratory maintains a *Quality Control Limit Summary* in the LIMS referred *to as "Method Limit Groups"* that summarize the precision and accuracy acceptability limits for performed analyses. This summary includes an effective date, is updated each time new limits are generated and are managed by the laboratory's QA department. Unless otherwise noted, limits within these tables are laboratory generated. Some acceptability limits are derived from US EPA methods when they are required. Where US EPA method limits are not required, the laboratory has developed limits from evaluation of data from similar matrices. Criteria for development of control limits are contained in SOP DV-QA-003P, *Quality Assurance Program*.

## 5.6 Statistical Quality Control

Statistically-derived precision and accuracy limits are required by selected methods (such as SW-846) and programs [such as the Ohio Voluntary Action Plan (VAP)]. The laboratory routinely utilizes statistically-derived limits to evaluate method performance and determine when corrective action is appropriate. The control charting process is defined in detail in SOP DV-QA-003P. The analysts are instructed to use the current limits in the laboratory (dated and approved by the Technical Manager and QA Manager) and entered into the Laboratory Information Management System (LIMS). The LIMS maintains an archive of all limits used within the laboratory. Limits are entered into the Method Limit Groups according to the effective date. All historical limits can be pulled using the "Historical" feature in the LIMS. If a method defines the QC limits, the method limits are used.

If a method requires the generation of historical limits, the lab develops such limits from recent data in the QC database of the LIMS following the guidelines described in Section 24. All calculations and limits are documented and dated when approved and effective. On occasion, a client requests contract-specified limits for a specific project.

Current QC limits are entered and maintained in the LIMS analyte database. As sample results and the related QC are entered into LIMS, the sample QC values are compared with the limits in LIMS to determine if they are within the acceptable range. The analyst then evaluates if the sample needs to be rerun or re-extracted/rerun or if a comment should be added to the report explaining the reason for the QC outlier.

### 5.6.1 QC Charts

As the QC limits are calculated, QC charts are generated showing warning and control limits for the purpose of evaluating trends. Refer to SOP DV-QA-003P for a description of the control charting process and evaluation of trending.

### 5.7 Quality System Metrics

In addition to the QC parameters discussed above, the entire Quality System is evaluated on a monthly basis through the use of specific metrics (refer to Section 16). These metrics are used to drive continuous improvement in the laboratory's Quality System.

## SECTION 6. DOCUMENT CONTROL

### 6.1 Overview

The QA Department is responsible for the control of documents used in the laboratory to ensure that approved, up-to-date documents are in circulation and out-of-date (obsolete) documents are archived or destroyed. The following documents, at a minimum, must be controlled:

- Laboratory Quality Assurance Manual
- Laboratory Standard Operating Procedures (SOP)
- Laboratory Policies
- Work Instructions and Forms
- Corporate Policies and Procedures distributed outside the intranet

Corporate Quality posts Corporate Manuals, SOPs, Policies, Work Instructions, White Papers and Training Materials on the company intranet site. These Corporate documents are only considered controlled when they are read on the intranet site. Printed copies are considered uncontrolled unless the laboratory physically distributes them as controlled documents. A detailed description of the procedure for issuing, authorizing, controlling, distributing, and archiving Corporate documents is found in Corporate SOP No. CW-Q-S-001, Corporate Document Control and Archiving. The laboratory specific SOP DV-QA-0010, *Document Control* provides additional information for the Denver laboratory procedures.

The laboratory QA Department also maintains access to various references and document sources integral to the operation of the laboratory. This includes reference methods and regulations. Instrument manuals (hard or electronic copies) are also maintained by the laboratory.

The laboratory maintains control of records for raw analytical data and supporting records such as audit reports and responses, logbooks, standard logs, training files, MDL studies, Proficiency Testing (PT) studies, certifications and related correspondence, and corrective action reports. Raw analytical data consists of bound logbooks, instrument printouts, any other notes, magnetic media, electronic data and final reports.

### 6.2 Document Approval and Issue

The pertinent elements of a document control system for each document include a unique document title and number, pagination, the total number of pages of the item or an 'end of

document' page, the effective date, revision number and the laboratory's name. The QA personnel are responsible for the maintenance of this system.

Controlled documents are authorized by the QA Department. In order to develop a new document, a department manager submits an electronic or hardcopy draft to the QA Department for suggestions and approval before use. Upon approval, QA personnel add the identifying version information to the document and retains that document as the official document on file. That document is then provided to all applicable operational units (may include electronic access). Controlled documents are identified as such and records of their distribution are kept by the QA Department. Document control may be achieved by either electronic or hardcopy distribution.

The QA Department maintains a list of the official versions of controlled documents.

Quality System Policies and Procedures will be reviewed at a minimum of every year and revised as appropriate. Changes to documents occur when a procedural change warrants.

### 6.3 Procedures for Document Control Policy

For changes to the QA Manual, refer to SOP No. DV-QA-001P, *Preparation and Management of Standard Operating Procedures (SOPs) and Other Controlled Documents*. Uncontrolled copies must not be used within the laboratory. Previous revisions and back-up data are stored by the QA department. Electronic copies are stored on the Public server in the QA folder G:\QA\READ\SOPS\ESOPS\ALL.

For changes to SOPs, refer to SOP No. DV-QA-001P, *Preparation and Management of Standard Operating Procedures (SOPs) and Other Controlled Documents.* The SOP identified above also defines the process of changes to SOPs.

Forms, worksheets, work instructions, white papers, protocols, and information are organized by department and document type in the QA office. Electronic versions are kept on the Public server in the QA folder under G:\QA\Edit\FORMS and G:\QA\READ\SOPS\Word Docs. The procedure for the care of these documents is in SOP DV-QA-001P.

### 6.4 Obsolete Documents

All invalid or obsolete documents are removed, or otherwise prevented from unintended use. The laboratory has specific procedures as described above to accomplish this. In general, obsolete documents are collected from employees according to distribution lists and are marked obsolete on the cover or destroyed. At least one copy of the obsolete document is archived according to SOP DV-QA-0005, *Document Archiving Procedure.*

## SECTION 7. SERVICE TO THE CLIENT

### 7.1 Overview

The laboratory has established procedures for the review of work requests and contracts, oral or written. The procedures include evaluation of the laboratory's capability and resources to meet the contract's requirements within the requested time period. All requirements, including the methods to be used, must be adequately defined, documented and understood. For many environmental sampling and analysis programs, testing design is site or program specific and does not necessarily "fit" into a standard laboratory service or product. It is the laboratory's intent to provide both standard and customized environmental laboratory services to our clients.

A thorough review of technical and QC requirements contained in contracts is performed to ensure project success. The appropriateness of requested methods, and the lab's capability to perform them must be established. Projects, proposals and contracts are reviewed for adequately defined requirements and the laboratory's capability to meet those requirements. Alternate test methods that are capable of meeting the clients' requirements may be proposed by the lab. A review of the lab's capability to analyze non-routine analytes is also part of this review process.

All projects, proposals and contracts are reviewed for the client's requirements in terms of compound lists, test methodology requested, sensitivity (detection and reporting levels), accuracy, and precision requirements (% Recovery and RPD). The reviewer ensures that the laboratory's test methods are suitable to achieve these requirements and that the laboratory holds the appropriate certifications and approvals to perform the work. The laboratory and any potential subcontract laboratories must be certified, as required, for all proposed tests.

The laboratory must determine if it has the necessary physical, personnel and information resources to meet the contract, and if the personnel have the expertise needed to perform the testing requested. Each proposal is checked for its impact on the capacity of the laboratory's equipment and personnel. As part of the review, the proposed turnaround time will be checked for feasibility.

Electronic or hard copy deliverable requirements are evaluated against the laboratory's capacity for production of the documentation.

If the laboratory cannot provide all services but intends to subcontract such services, whether to another TestAmerica facility or to an outside firm, this will be documented and discussed with the client prior to contract approval. (Refer to Section 8 for Subcontracting Procedures.)

The laboratory informs the client of the results of the review if it indicates any potential conflict, deficiency, lack of accreditation, or inability of the lab to complete the work satisfactorily. Any discrepancy between the client's requirements and the laboratory's capability to meet those requirements is resolved in writing before acceptance of the contract. It is necessary that the contract be acceptable to both the laboratory and the client. Amendments initiated by the client and/or TestAmerica, are documented in writing.

All contracts, QAPPs, Sampling and Analysis Plans (SAPs), contract amendments, and documented communications become part of the project record.

The same contract review process used for the initial review is repeated when there are amendments to the original contract by the client, and the participating personnel are informed of the changes.

## 7.2 Review Sequence and Key Personnel

Appropriate personnel will review the work request at each stage of evaluation.

For routine projects and other simple tasks, a review by the Customer Service Manager (CSM) is considered adequate. The CSM confirms that the laboratory has any required certifications, that it can meet the clients' data quality and reporting requirements and that the lab has the capacity to meet the clients turn around needs. It is recommended that, where there is a sales person assigned to the account, an attempt should be made to contact that sales person to inform them of the incoming samples.

For new, complex or large projects, the proposed contract is given to the National Account Director, who will decide which lab will receive the work based on the scope of work and other requirements, including certification, testing methodology, and available capacity to perform the work. The contract review process is outlined in SOP No. CA-L-P-002**,** Contract Compliance Policy.

This review encompasses all facets of the operation. The scope of work is distributed to the appropriate personnel, as needed based on scope of contract, to evaluate all of the requirements shown above (not necessarily in the order below):

- Legal & Contracts Director
- General Manager
- The Laboratory Project Manager
- Customer Service Representative
- The Laboratory Operations Manager
- Laboratory and/or Corporate Technical Directors
- Laboratory and/or Corporate Information Technology Managers/Directors
- Regional and/or National Account representatives
- Laboratory and/or Corporate Quality
- Laboratory and/or Corporate Environmental Health and Safety Managers/Directors
- The Laboratory Director reviews the formal laboratory quote and makes final acceptance for their facility.

The National Account Director, Legal Contracts Director, or local account representative then submits the final proposal to the client.

In the event that one of the above personnel is not available to review the contract, his or her back-up will fulfill the review requirements.

The Legal & Contracts Director maintains copies of all signed contracts**.** TestAmerica Denver's Customer Service Department maintains copies of all signed contracts for reference locally.

### 7.3 Documentation

Appropriate records are maintained for every contract or work request. All stages of the contract review process are documented and include records of any significant changes. Contracts filed by the CSM group are filed in locked fire proof cabinets.

The contract will be distributed to and maintained by the appropriate sales/marketing personnel and the Regional Account Manager. A copy of the contract and formal quote will be filed with the laboratory CSM and the Lab Director/Manager.

Records are maintained of pertinent discussions with a client relating to the client's requirements or the results of the work during the period of execution of the contract. The PM keeps a phone log of conversations with the client.

#### 7.3.1 Project-Specific Quality Planning

Communication of contract specific technical and QC criteria is an essential activity in ensuring the success of site specific testing programs. To achieve this goal, the laboratory assigns a PM to each client. It is the PM's responsibility to ensure that project-specific technical and QC requirements are effectively evaluated and communicated to the laboratory personnel before and during the project. QA department involvement may be needed to assist in the evaluation of custom QC requirements.

PM's are the primary client contact and they ensure resources are available to meet project requirements. Although PM's do not have direct reports or staff in production, they coordinate opportunities and work with laboratory management and supervisory staff to ensure available resources are sufficient to perform work for the client's project. Project management is positioned between the client and laboratory resources.

Prior to work on a new project, the dissemination of project information and/or project opening meetings may occur to discuss schedules and unique aspects of the project. Items to be discussed may include the project technical profile, turnaround times, holding times, methods, analyte lists, reporting limits, deliverables, sample hazards, or other special requirements. The PM introduces new projects to the laboratory staff through project kick-off meetings or to the supervisory staff during production meetings. These meetings provide direction to the laboratory staff in order to maximize production and client satisfaction, while maintaining quality. In addition, project notes may be associated with each sample batch as a reminder upon sample receipt and analytical processing. Unique or large programs generally have a Quality Assurance Summary prepared by the PM. This summary is posted on the public Outlook folders for anyone in the lab to access. The Quality Assurance Summary documents all requirements that are non-standard.

During the project, any change that may occur within an active project is agreed upon between the client/regulatory agency and the PM/laboratory. These changes (e.g., use of a non-standard method or modification of a method) and approvals must be documented prior to implementation. Documentation pertains to any document, e.g., letter, e-mail, variance, contract addendum, which has been signed by both parties.

Such changes are also communicated to the laboratory during production meetings. Such changes are updated in the Quality Assurance Summery and are introduced to the managers at these meetings. The laboratory staff is then introduced to the modified requirements via the PM or the individual laboratory Technical Manager. After the modification is implemented into the laboratory process, documentation of the modification is made in the case narrative of the data report(s).

The laboratory strongly encourages client visits to the laboratory and for formal/informal information sharing session with employees in order to effectively communicate ongoing client needs as well as project specific details for customized testing programs.

## 7.4 Special Services

The laboratory cooperates with clients and their representatives to monitor the laboratory's performance in relation to work performed for the client. It is the laboratory's goal to meet all client requirements in addition to statutory and regulatory requirements. The laboratory has procedures to ensure confidentiality to clients (Section 15 and 25).

**Note:** ISO/IEC 17025 states that a laboratory "shall afford clients or their representatives cooperation to clarify the client's request". This topic is discussed in Section 7.

The laboratory's standard procedures for reporting data are described in Section 25. Special services are also available and provided upon request. These services include:

- Reasonable access for our clients or their representatives to the relevant areas of the laboratory for the witnessing of tests performed for the client.
- Assist client-specified third party data validators as specified in the client's contract.
- Supplemental information pertaining to the analysis of their samples. Note: An additional charge may apply for additional data/information that was not requested prior to the time of sample analysis or previously agreed upon.

## 7.5 Client Communication

Project managers are the primary communication link to the clients. They shall inform their clients of any delays in project completion as well as any non-conformances in either sample receipt or sample analysis. Project management will maintain ongoing client communication throughout the entire client project.

Technical Directors and/or Quality Assurance are available to discuss any technical questions or concerns that the client may have.

### 7.6 Reporting

The laboratory works with our clients to produce any special communication reports required by the contract.

### 7.7 Client Surveys

The laboratory assesses both positive and negative client feedback. The results are used to improve overall laboratory quality and client service. TestAmerica's Sales and Marketing teams periodically develops lab and client specific surveys to assess client satisfaction.

## SECTION 8. SUBCONTRACTING OF TESTS

### 8.1 Overview

For the purpose of this quality manual, the phrase subcontract laboratory refers to a laboratory external to the TestAmerica laboratories. The phrase "work sharing" refers to internal transfers of samples between the TestAmerica laboratories. The term outsourcing refers to the act of subcontracting tests.

When contracting with our clients, the laboratory makes commitments regarding the services to be performed and the data quality for the results to be generated. When the need arises to outsource testing for our clients because project scope, changes in laboratory capabilities, capacity or unforeseen circumstances, we must be assured that the subcontractors or work sharing laboratories understand the requirements and will meet the same commitments we have made to the client. Refer to TestAmerica's Corporate SOP's on Subcontracting Procedures (CA-L-S-002) and the Work Sharing Process (CA-C-S-001).

When outsourcing analytical services, the laboratory will assure, to the extent necessary, that the subcontract or work sharing laboratory maintains a program consistent with the requirements of this document, the requirements specified in TNI/ISO 17025 and/or the client's Quality Assurance Project Plan (QAPP). All QC guidelines specific to the client's analytical program are transmitted to the subcontractor and agreed upon before sending the samples to the subcontract facility. Additionally, work requiring accreditation will be placed with an appropriately accredited laboratory. The laboratory performing the subcontracted work will be identified in the final report, as will non-TNI accredited work where required. Refer to SOP DV-QA-0027 for laboratory specific procedures.

Project Managers (PMs), Customer Service Managers (CSM), or Regional Account Executives (RAE) for the Export Lab are responsible for obtaining client approval prior to outsourcing any samples. The laboratory will advise the client of a subcontract or work sharing arrangement in writing and when possible approval from the client shall be retained in the project folder.

**Note:** In addition to the client, some regulating agencies (e.g, USDA) or contracts (e.g, certain USACE projects) may require notification prior to placing such work (see SOP DV-QA-0027 for laboratory specific procedures).

## 8.2 Qualifying and Monitoring Subcontracators

Whenever a PM or Customer Service Manager (CSM) becomes aware of a client requirement or laboratory need where samples must be outsourced to another laboratory, the other laboratory(s) shall be selected based on the following:

- The first priority is to attempt to place the work in a qualified TestAmerica laboratory;
- Firms specified by the client for the task (Documentation that a subcontractor was designated by the client must be maintained with the project file. This documentation can be as simple as placing a copy of an e-mail from the client in the project folder);
- Firms listed as pre-qualified and currently under a subcontract with TestAmerica: A listing of all approved subcontracting laboratories is available on the TestAmerica intranet site. Supporting documentation is maintained by corporate offices and by the TestAmerica laboratory originally requesting approval of the subcontract lab. Verify necessary accreditation, where applicable, (e.g., on the subcontractors TNI, A2LA accreditation or State Certification).
- Firms identified in accordance with the company's Small Business Subcontracting program as small, women-owned, veteran-owned and/or minority-owned businesses;
- TNI or A2LA accredited laboratories.
- In addition, the firm must hold the appropriate certification to perform the work required.

All TestAmerica laboratories are pre-qualified for work sharing provided they hold the appropriate accreditations, can adhere to the project/program requirements, and the client approved sending samples to that laboratory. The client must provide acknowledgement that the samples can be sent to that facility (an e-mail is sufficient documentation or if acknowledgement is verbal, the date, time, and name of person providing acknowledgement must be documented). The originating laboratory is responsible for communicating all technical, quality, and deliverable requirements as well as other contract needs. (Corporate SOP No. CA-C-S-001, Work Sharing Process).

When the potential sub-contract laboratory has not been previously approved, Account Executives, CSMs, or PMs may nominate a laboratory as a subcontractor based on need. The decision to nominate a laboratory must be approved by the Laboratory Director. The Laboratory Director requests that the QA Manager begin the process of approving the subcontract laboratory as outlined in Corporate SOP No. CA-L-S-002, Subcontracting Procedures. The client must provide acknowledgement that the samples can be sent to that facility (an e-mail is sufficient documentation or if acknowledgement is verbal, the date, time, and name of person providing acknowledgement must be documented).

**8.2.1** Once the appropriate accreditation and legal information is received by the laboratory, it is evaluated for acceptability (where applicable) and forwarded to Corporate Contracts for formal contracting with the laboratory. They will add the lab to the approved list on the intranet site and notify the finance group for JD Edwards.

**8.2.2** The client will assume responsibility for the quality of the data generated from the

use of a subcontractor they have requested the lab to use. The qualified subcontractors on the intranet site are known to meet minimal standards. TestAmerica does not certify laboratories. The subcontractor is on our approved list and can only be recommended to the extent that we would use them.

**8.2.3** The status and performance of qualified subcontractors will be monitored periodically by the Corporate Contracts and/or Quality Departments. Any problems identified will be brought to the attention of TestAmerica's Corporate Finance or Corporate Quality personnel.

- Complaints shall be investigated. Documentation of the complaint, investigation and corrective action will be maintained in the subcontractor's file on the intranet site. Complaints are posted using the Vendor Performance Report.
- Information shall be updated on the intranet when new information is received from the subcontracted laboratories.
- Subcontractors in good standing will be retained on the intranet listing. The QA Manager will notify all TestAmerica laboratories, Corporate Quality and Corporate Contracts if any laboratory requires removal from the intranet site. This notification will be posted on the intranet site and e-mailed to all Laboratory Directors, QA Managers and Sales Personnel.

## 8.3 Oversight and Reporting

The PM or CSM must request that the selected subcontractor be presented with a subcontract, if one is not already executed between the laboratory and the subcontractor. The subcontract must include terms which flow down the requirements of our clients, either in the subcontract itself or through the mechanism of work orders relating to individual projects. A standard subcontract and the Lab Subcontractor Vendor Package (posted on the intranet) can be used to accomplish this, and the Legal & Contracts Director can tailor the document or assist with negotiations, if needed. The PM (or RAE or CSM, etc.) responsible for the project must advise and obtain client consent to the subcontract as appropriate, and provide the scope of work to ensure that the proper requirements are made a part of the subcontract and are made known to the subcontractor.

Prior to sending samples to the subcontracted laboratory, the PM confirms their certification status to determine if it's current and scope-inclusive. The information is documented on a Subcontracted Sample Form (Figure 8-1) and the form is retained in the project folder. For TestAmerica laboratories, certifications can be viewed on the company's TotalAccess Database.

The Sample Control department is responsible for ensuring compliance with QA requirements and applicable shipping regulations when shipping samples to a subcontracted laboratory.

All subcontracted samples must be accompanied by a TestAmerica Chain of Custody (COC). A copy of the original COC sent by the client must also be included with all samples workshared within TestAmerica. Client CoCs are only forwarded to external subcontractors when samples are shipped directly from the project site to the subcontractor lab. Under routine circumstances, client CoCs are not provided to external subcontractors.

Through communication with the subcontracted laboratory, the PM monitors the status of the subcontracted analyses, facilitates successful execution of the work, and ensures the timeliness and completeness of the analytical report.

Non-TNI accredited work must be identified in the subcontractor's report as appropriate. If TNI accreditation is not required, the report does not need to include this information.

Reports submitted from subcontractor laboratories are not altered and are included in their original form in the final project report. This clearly identifies the data as being produced by a subcontractor facility. If subcontract laboratory data is incorporated into the laboratories EDD (i.e., imported), the report must explicitly indicate which lab produced the data for which methods and samples.

**Note:** The results submitted by a TestAmerica work sharing laboratory may be transferred electronically and the results reported by the TestAmerica work sharing lab are identified on the final report. The report must explicitly indicate which lab produced the data for which methods and samples. The final report must include a copy of the completed COC for all work sharing reports.

## 8.4 Contingency Planning

The Laboratory Director may waive the full qualification of a subcontractor process temporarily to meet emergency needs; however, this decision & justification must be documented in the project files, and the 'Purchase Order Terms And Conditions For Subcontracted Laboratory Services' must be sent with the samples and Chain-of-Custody. In the event this provision is utilized, the laboratory (e.g., PM) will be required to verify and document the applicable accreditations of the subcontractor. All other quality and accreditation requirements will still be applicable, but the subcontractor need not have signed a subcontract with TestAmerica at this time. The comprehensive approval process must then be initiated within 30 calendar days of subcontracting.

**Figure 8-1.**

**Example: Verification of Subcontract Lab Status Form**

TestAmerica Denver is responsible to our clients for on-going assurance that subcontracted analytical services meet TestAmerica Denver's expectations for quality. As part of this program, we require on-going verification that the following statements are true. Please return the completed form with the final report to TestAmerica Denver.

Laboratory Name: _____

| | True | False | N/A | Comments |
|---|---|---|---|---|
| Your laboratory continues to hold current certifications as applicable to the requested fields of testing? | | | | |
| Your laboratory has successfully completed PT samples for at least 2 of the last 3 of the requested fields of testing? | | | | |
| Your laboratory has successfully completed method detection limits for the requested fields of testing within the last 12 months? | | | | |
| There are no changes in equipment that affect the laboratory's capability to perform the requested fields of testing? | | | | |
| There are no changes in qualified personnel that affect the laboratory's capability to perform the requested fields of testing? | | | | |
| All testing is performed at the location to which the samples were delivered? | | | | |
| Your laboratory does not have any OSHA, DOT, DoE, DoD, or EPA citations or pending investigations? | | | | |

Completed by: _____ on _____.
Name

# SECTION 9. PURCHASING SERVICES AND SUPPLIES

## 9.1 Overview

Evaluation and selection of suppliers and vendors is performed, in part, on the basis of the quality of their products, their ability to meet the demand for their products on a continuous and short term basis, the overall quality of their services, their past history, and competitive pricing. This is achieved through evaluation of objective evidence of quality furnished by the supplier, which can include certificates of analysis, recommendations, and proof of historical compliance with similar programs for other clients. To ensure that quality critical consumables and equipment conform to specified requirements, which may affect quality, all purchases from specific vendors are approved by a member of the supervisory or management staff. Capital expenditures are made in accordance with TestAmerica's Corporate Controlled Purchases Procedure, SOP No. CW-F-S-007.

Contracts will be signed in accordance with TestAmerica's Corporate Authorization Matrix Policy, Policy No. CW-F-P-002. Request for Proposals (RFP's) will be issued where more information is required from the potential vendors than just price. Process details are available in TestAmerica's Corporate Procurement and Contracts Policy (Policy No. CW-F-P-004). RFP's allow TestAmerica to determine if a vendor is capable of meeting requirements such as supplying all of the TestAmerica facilities, meeting required quality standards and adhering to necessary ethical and environmental standards. The RFP process also allows potential vendors to outline any additional capabilities they may offer.

## 9.2 Glassware

Glassware used for volumetric measurements must be Class A or verified for accuracy according to laboratory procedure. Pyrex (or equivalent) glass should be used where possible. For safety purposes, thick-wall glassware should be used where available.

## 9.3 Reagents, Standards & Supplies

Purchasing guidelines for equipment and reagents must meet the requirements of the specific method and testing procedures for which they are being purchased. Solvents and acids are pre-tested in accordance with TestAmerica's Corporate SOP on Solvent & Acid Lot Testing & Approval, SOP No. CA-Q-S-001.

### 9.3.1 Purchasing

Chemical reagents, solvents, glassware, and general supplies are ordered as needed to maintain sufficient quantities on hand. Materials used in the analytical process must be of a known quality. The wide variety of materials and reagents available makes it advisable to specify recommendations for the name, brand, and grade of materials to be used in any determination. This information is contained in the method SOP. The analyst completes the Material Request Sheet when requesting reagents, standards, or supplies. The analyst may check the item out of the on-site consignment system that contains items approved for laboratory use.

The analyst must provide the master item number (from the master item list that has been approved by the Technical Director), item description, package size, catalogue page number, and the quantity needed. If an item being ordered is not the exact item requested, approval must be obtained from the Technical Director prior to placing the order. The purchasing manager or designee places the order.

### 9.3.2 Receiving

It is the responsibility of the shipping/receiving technician to receive the shipment. It is the responsibility of the analyst who ordered the materials to document the date materials where received. Once the ordered reagents or materials are received, the analyst compares the information on the label or packaging to the original order to ensure that the purchase meets the quality level specified. Material Safety Data Sheets (MSDSs) are available online through the Company's intranet website. Anyone may review these for relevant information on the safe handling and emergency precautions of on-site chemicals.

### 9.3.3 Specifications

Methods in use in the laboratory specify the grade of reagent that must be used in the procedure. If the quality of the reagent is not specified, analytical reagent grade will be used. It is the responsibility of the analyst to check the procedure carefully for the suitability of grade of reagent.

Chemicals must not be used past the manufacturer's expiration date and must not be used past the expiration time noted in a method SOP. If expiration dates are not provided, the laboratory may contact the manufacturer to determine an expiration date.

The laboratory assumes a five year expiration date on inorganic dry chemicals and solvents unless noted otherwise by the manufacturer or by the reference source method. Chemicals/solvents should not be used past the manufacturer's or SOPs expiration date unless 'verified' (refer to item 3 listed below).

- An expiration date cannot be extended if the dry chemical/solvent is discolored or appears otherwise physically degraded, the dry chemical/solvent must be discarded.
- Expiration dates can be extended if the dry chemical/solvent is found to be satisfactory based on acceptable performance of quality control samples (Continuing Calibration Verification (CCV), Blanks, Laboratory Control Sample (LCS), etc.).
- If the dry chemical/solvent is used for the preparation of standards, the expiration dates can be extended 6 months if the dry chemical/solvent is compared to an unexpired independent source in performing the method and the performance of the dry chemical/solvent is found to be satisfactory. The comparison must show that the dry chemical/solvent meets CCV limits. The comparison studies are maintained within each department.

Wherever possible, standards must be traceable to national or international standards of measurement or to national or international reference materials. Records to that effect are available to the user.

Compressed gases in use are checked for pressure and secure positioning daily. The minimum total pressure must be 500 psig or the tank must be replaced. To prevent a tank from going to dryness, close observation of the tank gauge must take place as pressure decreases towards 500 psig, or the tank must be replaced. The quality of the gases must meet method or manufacturer specification or be of a grade that does not cause any analytical interference.

Water used in the preparation of standards or reagents must have a specific conductivity of less than 1- µmho/cm (or specific resistivity of greater than 1.0 megohm-cm) at 25$^{o}$C. The specific conductivity is checked and recorded daily. If the water's specific conductivity is greater than the specified limit, the Facility Manager and appropriate Technical–Managers must be notified immediately in order to notify all departments, decide on cessation (based on intended use) of activities, and make arrangements for correction.

The laboratory may purchase reagent grade (or other similar quality) water for use in the laboratory. This water must be certified "clean" by the supplier for all target analytes or otherwise verified by the laboratory prior to use. This verification is documented.

Standard lots are verified before first time use if the laboratory switches manufacturers or has historically had a problem with the type of standard.

Purchased bottleware used for sampling must be certified clean and the certificates must be maintained. If uncertified sampling bottleware is purchased, all lots must be verified clean prior to use. This verification must be maintained.

Records of manufacturer's certification and traceability statements are maintained in files or binders in the LIMS. These records include date of receipt, lot number (when applicable), and expiration date (when applicable). Incorporation of the item into the record indicates that the analyst has compared the new certificate with the previous one for the same purpose and that no difference is noted, unless approved and so documented by the Technical Director or QA Manager.

### 9.3.4 Storage

Reagent and chemical storage is important from the aspects of both integrity and safety. Light-sensitive reagents may be stored in brown-glass containers. Storage conditions are per the Corporate Environmental Health & Safety Manual (Corp. Doc. No. CW-E-M-001) and method SOPs or manufacturer instructions.

## 9.4 Purchase of Equipment / Instruments / Software

When a new piece of equipment is needed, either for additional capacity or for replacing inoperable equipment, the analyst or supervisor makes a supply request to the Technical Manager/Director, Operations Manager, and/or the Laboratory Director. If they agree with the

request, the procedures outlined in TestAmerica's Corporate Policy No. CA-T-P-001, Qualified Products List, are followed. A decision is made as to which piece of equipment can best satisfy the requirements. The appropriate written requests are completed and the corporate office places the actual order.

Upon receipt of a new or used piece of equipment, an identification name is assigned and added to the equipment list. IT must also be notified so that they can synchronize the instrument for back-ups. Its capability is assessed to determine if it is adequate or not for the specific application. For instruments, a calibration curve is generated, followed by MDLs, Demonstration of Capabilities (DOCs), and other relevant criteria (refer to Section 19). For software, its operation must be deemed reliable and evidence of instrument verification must be retained by the IT Department or QA Department. Software certificates supplied by the vendors are filed with the LIMS Administrator. The manufacturer's operation manual is retained at the bench.

### 9.5 Services

Service to analytical instruments (except analytical balances) is performed on an as needed basis. Routine preventative maintenance is discussed in Section 20. The need for service is determined by analysts and/or Technical Managers. The service providers that perform the services are approved by the Technical Manager / Director.

### 9.6 Suppliers

TestAmerica selects vendors through a competitive proposal / bid process, strategic business alliances or negotiated vendor partnerships (contracts). This process is defined in the Corporate Finance documents on Procurement & Contracts Policy (Policy No. CW-F-P-004). The level of control used in the selection process is dependent on the anticipated spending amount and the potential impact on TestAmerica business. Vendors that provide test and measuring equipment, solvents, standards, certified containers, instrument related service contracts or subcontract laboratory services shall be subject to more rigorous controls than vendors that provide off-the-shelf items of defined quality that meet the end use requirements. The JD Edwards purchasing system includes all suppliers/vendors that have been approved for use.

Evaluation of suppliers is accomplished by ensuring the supplier ships the product or material ordered and that the material is of the appropriate quality. This is documented by signing off on packing slips or other supply receipt documents. The purchasing documents contain the data that adequately describe the services and supplies ordered.

Any issues of vendor performance are to be reported immediately by the laboratory staff to the Corporate Purchasing Group by completing a Vendor Performance Report.

The Corporate Purchasing Group will work through the appropriate channels to gather the information required to clearly identify the problem and will contact the vendor to report the problem and to make any necessary arrangements for exchange, return authorization, credit, etc.

As deemed appropriate, the Vendor Performance Reports will be summarized and reviewed to determine corrective action necessary, or service improvements required by vendors.

The laboratory has access to a listing of all approved suppliers of critical consumables, supplies and services. This information is provided through the JD Edwards purchasing system.

### 9.6.1 New Vendor Procedure

TestAmerica employees who wish to request the addition of a new vendor must complete a J.D. Edwards Vendor Add Request Form.

New vendors are evaluated based upon criteria appropriate to the products or services provided as well as their ability to provide those products and services at a competitive cost. Vendors are also evaluated to determine if there are ethical reasons or potential conflicts of interest with TestAmerica employees that would make it prohibitive to do business with them as well as their financial stability. The QA Department and/or the Technology Director are consulted with vendor and product selection that have an impact on quality.

## SECTION 10. COMPLAINTS

### 10.1 Overview

The laboratory considers an effective client complaint handling processes to be of significant business and strategic value. Listening to and documenting client concerns captures 'client knowledge' that enables our operations to continually improve processes and client satisfaction. An effective client complaint handling process also provides assurance to the data user that the laboratory will stand behind its data, service obligations and products.

A client complaint is any expression of dissatisfaction with any aspect of our business services (e.g., communications, responsiveness, data, reports, invoicing and other functions) expressed by any party, whether received verbally or in written form. Client inquiries, complaints or noted discrepancies are documented, communicated to management, and addressed promptly and thoroughly.

The laboratory has procedures for addressing both external and internal complaints with the goal of providing satisfactory resolution to complaints in a timely and professional manner.

The nature of the complaint is identified, documented and investigated, and an appropriate action is determined and taken. In cases where a client complaint indicates that an established policy or procedure was not followed, the QA Department must evaluate whether a special audit must be conducted to assist in resolving the issue. A written confirmation or letter to the client, outlining the issue and response taken is recommended as part of the overall action taken.

The process of complaint resolution and documentation utilizes the procedures outlined in Section 12 (Corrective Actions) and is documented following in SOP DV-QA-013P, *Customer Complaints.*

### 10.2 External Complaints

An employee that receives a complaint initiates the complaint resolution process by first documenting the complaint according to SOP # DV-QA-013P.

Complaints fall into two categories: correctable and non-correctable. An example of a correctable complaint would be one where a report re-issue would resolve the complaint. An example of a non-correctable complaint would be one where a client complains that their data was repeatedly late. Non-correctable complaints should be reviewed for preventive action measures to reduce the likelihood of future occurrence and mitigation of client impact.

The general steps in the complaint handling process are:

- Receiving and Documenting Complaints
- Complaint Investigation and Service Recovery
- Process Improvement

The laboratory shall inform the initiator of the complaint of the results of the investigation and the corrective action taken, if any.

### 10.3 Internal Complaints

Internal complaints include, but are not limited to: errors and non-conformances, training issues, internal audit findings, and deviations from methods. Corrective actions may be initiated by any staff member who observes a nonconformance and shall follow the procedures outlined in Section 12. In addition, Corporate Management, Sales and Marketing and IT may initiate a complaint by contacting the laboratory or through the corrective action system described in Section 12.

### 10.4 Management Review

The number and nature of client complaints is reported by the QA Manager to the laboratory and QA Director in the QA Monthly report. Monitoring and addressing the overall level and nature of client complaints and the effectiveness of the solutions is part of the Annual Management Review (Section 16).

## SECTION 11. CONTROL OF NON-CONFORMING WORK

### 11.1 Overview

When data discrepancies are discovered or deviations and departures from laboratory SOPs, policies and/or client requests have occurred, corrective action is taken immediately. First, the laboratory evaluates the significance of the nonconforming work. Then, a corrective action plan is initiated based on the outcome of the evaluation. If it is determined that the nonconforming work is an isolated incident, the plan could be as simple as adding a qualifier to the final results and/or

making a notation in the case narrative. If it is determined that the nonconforming work is a systematic or improper practices issue, the corrective action plan could include a more in depth investigation and a possible suspension of an analytical method. In all cases, the actions taken are documented using the laboratory's corrective action system (refer to Section 12).

Due to the frequently unique nature of environmental samples, sometimes departures from documented policies and procedures are needed. Refer to SOP# DV-QA-0031, *Nonconformance and Corrective Action System* for the procedure to handle such situations.

Project Management may encounter situations where a client may request that a special procedure be applied to a sample that is not standard lab practice. Based on a technical evaluation, the lab may accept or opt to reject the request based on technical or ethical merit. An example might be the need to report a compound that the lab does not normally report. The lab would not have validated the method for this compound following the procedures in Section 19. The client may request that the compound be reported based only on the calibration. Such a request would need to be approved by the Technical Director and QA Manager, documented and included in the project folder. Deviations must also be noted on the final report with a statement that the compound is not reported in compliance with TNI (or the analytical method) requirements and the reason. Data being reported to a non-TNI state would need to note the change made to how the method is normally run.

### 11.2 Responsibilities and Authorities

TestAmerica's Corporate SOP entitled *Internal Investigation of Potential Data Discrepancies and Determination for Data Recall* (SOP No. CW-L-S-002) outlines the general procedures for the reporting and investigation of data discrepancies and alleged incidents of misconduct or violations of TestAmerica's data integrity policies as well as the policies and procedures related to the determination of the potential need to recall data.

Under certain circumstances, the Laboratory Director, a Technical Manager, or a member of the QA team may authorize departures from documented procedures or policies. The departures may be a result of procedural changes due to the nature of the sample; a one-time procedure for a client; QC failures with insufficient sample to reanalyze, etc. In most cases, the client will be informed of the departure prior to the reporting of the data. Any departures must be well documented using the laboratory's corrective action procedures. This information may also be documented in logbooks and/or data review checklists as appropriate. Any impacted data must be referenced in a case narrative and/or flagged with an appropriate data qualifier.

Any misrepresentation or possible misrepresentation of analytical data discovered by any laboratory staff member must be reported to facility Senior Management within 24-hours. The Senior Management staff is comprised of the Laboratory Director, the QA Manager, and the Technical Managers. The reporting of issues involving alleged violations of the company's Data Integrity or Manual Integration procedures must be conveyed to an Ethics and Compliance Officer (ECO), Director of Quality & Client Advocacy and the laboratory's Quality Director within 24 hours of discovery.

Whether an inaccurate result was reported due to calculation or quantitation errors, data entry errors, improper practices, or failure to follow SOPs, the data must be evaluated to determine the possible effect.

The Laboratory Director, QA Manager, ECOs, Corporate Quality, the General Managers and the Quality Directors have the authority and responsibility to halt work, withhold final reports, or suspend an analysis for due cause as well as authorize the resumption of work.

### 11.3 Evaluation of Significance and Actions Taken

For each nonconforming issue reported, an evaluation of its significance and the level of management involvement needed is made. This includes reviewing its impact on the final data, whether or not it is an isolated or systematic issue, and how it relates to any special client requirements.

TestAmerica's Corporate Data Investigation & Recall Procedure (SOP No. CW-L-S-002) distinguishes between situations when it would be appropriate for laboratory management to make the decision on the need for client notification (written or verbal) and data recall (report revision) and when the decision must be made with the assistance of the ECO's and Corporate Management. Laboratory level decisions are documented and approved using the laboratory's standard nonconformance/corrective action reporting in lieu of the data recall determination form contained in TestAmerica's Corporate SOP No. CW-L-S-002.

### 11.4 Prevention of NonConforming Work

If it is determined that the nonconforming work could recur, further corrective actions must be made following the laboratory's corrective action system. On a monthly basis the QA Department evaluates non-conformances to determine if any nonconforming work has been repeated multiple times. If so, the laboratory's corrective action process may be followed.

### 11.5 Method Suspension / Restriction (Stop Work Procedures)

In some cases, it may be necessary to suspend/restrict the use of a method or target compound which constitutes significant risk and/or liability to the laboratory. Suspension/restriction procedures can be initiated by any of the persons noted in Section 11.2, Paragraph 5.

Prior to suspension/restriction, confidentiality will be respected, and the problem with the required corrective and preventive action will be stated in writing and presented to the Laboratory Director.

The Laboratory Director shall arrange for the appropriate personnel to meet with the QA Manager as needed. This meeting shall be held to confirm that there is a problem, that suspension/restriction of the method is required and will be concluded with a discussion of the steps necessary to bring the method/target or test fully back on line. In some cases, that may not be necessary if all appropriate personnel have already agreed there is a problem and there is agreement on the steps needed to bring the method, target or test fully back on line.

The QA Manager will also initiate a corrective action report as described in Section 12 if one has not already been started. A copy of any meeting notes and agreed upon steps should be faxed or e-mailed by the laboratory to the appropriate General Manager and member of Corporate QA. This fax/e-mail acts as notification of the incident.

After suspension/restriction, the lab will hold all reports to clients pending review. No faxing, mailing or distributing through electronic means may occur. The report must not be posted for viewing on the internet. It is the responsibility of the Laboratory Director to hold all reporting and to notify all relevant laboratory personnel regarding the suspension/restriction (e.g., Project Management, Log-in, etc.). Clients will NOT generally be notified at this time. Analysis may proceed in some instances depending on the non-conformance issue.

Within 72 hours, the QA Manager will determine if compliance is now met and reports can be released, OR determine the plan of action to bring work into compliance, and release work. A team, with all principals involved (Laboratory Director, Operations Manager, Technical Manager/Director, QA Manager) can devise a start-up plan to cover all steps from client notification through compliance and release of reports. Project Management and the Directors of Client Services and Sales and Marketing must be notified if clients must be notified or if the suspension/restriction affects the laboratory's ability to accept work. The QA Manager must approve start-up or elimination of any restrictions after all corrective action is complete. This approval is given by final signature on the completed corrective action report.

## SECTION 12. CORRECTIVE ACTION

### 12.1 Overview

A major component of TestAmerica's Quality Assurance (QA) Program is the problem investigation and feedback mechanism designed to keep the laboratory staff informed on quality related issues and to provide insight to problem resolution. When nonconforming work or departures from policies and procedures in the quality system or technical operations are identified, the corrective action procedure provides a systematic approach to assess the issues, restore the laboratory's system integrity, and prevent reoccurrence. Corrective actions are documented using Non-Conformance Memos (NCM) and Corrective Action Reports (CAR) (refer to Figure 12-1).

### 12.2 General

Problems within the quality system or within analytical operations may be discovered in a variety of ways, such as QC sample failures, internal or external audits, proficiency testing (PT) performance, client complaints, staff observation, etc.

The purpose of a corrective action system is to:

- Identify non-conformance events and assign responsibility(s) for investigating.

- Resolve non-conformance events and assign responsibility for any required corrective action.
- Identify systematic problems before they become serious.
- Identify and track client complaints and provide resolution.

**12.2.1 Non-Conformance Report (NCM)** - is used to document the following types of corrective actions:

- Deviations from an established procedure or SOP
- QC outside of limits (non-matrix related)
- Isolated reporting / calculation errors
- Client complaints
- Discrepancies in materials / goods received vs. manufacturer packing slips.

**12.2.2 Corrective Action Report (CAR)** - is used to document the following types of corrective actions:

- Questionable trends that are found in the review of NCMs.
- Issues found while reviewing NCMs that warrant further investigation.
- Internal and external audit findings
- Failed or unacceptable PT results.
- Corrective actions that cross multiple departments in the laboratory.
- Systematic reporting / calculation errors
- Client complaints
- Data recall investigations
- Identified poor process or method performance trends
- Excessive revised reports
- Health and Safety violations

This will provide background documentation to enable root cause analysis and preventive action.

## 12.3 Closed Loop Corrective Action Process

Any employee in the company can initiate a corrective action. There are four main components to a closed-loop corrective action process once an issue has been identified: Cause Analysis, Selection and Implementation of Corrective Actions (both short and long term), Monitoring of the Corrective Actions, and Follow-up.

### 12.3.1 Cause Analysis

- Upon discovery of a non-conformance event, the event must be defined and documented. An NCM or CAR must be initiated, someone is assigned to investigate the issue and the

event is investigated for cause. Table 12-1 provides some general guidelines on determining responsibility for assessment.

- The cause analysis step is the key to the process as a long term corrective action cannot be determined until the cause is determined.
- If the cause is not readily obvious, the Technical Manager, Laboratory Director, or QA Manager (or QA designee) is consulted.

### 12.3.2 Selection and Implementation of Corrective Actions

- Where corrective action is needed, the laboratory shall identify potential corrective actions. The action(s) most likely to eliminate the problem and prevent recurrence are selected and implemented. Responsibility for implementation is assigned.
- Corrective actions shall be to a degree appropriate to the magnitude of the problem identified through the cause analysis.
- Whatever corrective action is determined to be appropriate, the laboratory shall document and implement the changes. The NCM or CAR is used for this documentation.

### 12.3.3 Root Cause Analysis

Root Cause Analysis is a class of problem solving (investigative) methods aimed at identifying the basic or causal factor(s) that underlie variation in performance or the occurrence of a significant failure. The root cause may be buried under seemingly innocuous events, many steps preceding the perceived failure. At first glance, the immediate response is typically directed at a symptom and not the cause. Typically, root cause analysis would be best with three or more incidents to triangulate a weakness.

Systematically analyze and document the Root Causes of the more significant problems that are reported. Identify, track, and implement the corrective actions required to reduce the likelihood of recurrence of significant incidents. Trend the Root Cause data from these incidents to identify Root Causes that, when corrected, can lead to dramatic improvements in performance by eliminating entire classes of problems.

Identify the one event associated with problem and ask why this event occurred. Brainstorm the root causes of failures; for example, by asking why events occurred or conditions existed; and then why the cause occurred 5 consecutive times until you get to the root cause. For each of these sub events or causes, ask why it occurred. Repeat the process for the other events associated with the incident.

Root cause analysis does not mean the investigation is over. Look at technique, or other systems outside the normal indicators. Often creative thinking will find root causes that ordinarily would be missed, and continue to plague the laboratory or operation.

### 12.3.4 Monitoring of the Corrective Actions

- The Technical Manager and QA Manager are responsible to ensure that the corrective action taken was effective.

- Ineffective actions are documented and re-evaluated until acceptable resolution is achieved. Technical Managers are accountable to the Laboratory Director to ensure final acceptable resolution is achieved and documented appropriately.
- Each CAR is entered into a database for tracking purposes and a monthly summary of all corrective actions is printed out for review to aid in ensuring that the corrective actions have taken effect.
- The QA Manager reviews monthly NCMs and CARs for trends. Highlights are included in the QA monthly report (refer to Section 16). If a significant trend develops that adversely affects quality, an audit of the area is performed and corrective action implemented.
- Any out-of-control situations that are not addressed acceptably at the laboratory level may be reported to the Corporate Quality Director by the QA Manager, indicating the nature of the out-of-control situation and problems encountered in solving the situation.

### 12.3.5 Follow-up Audits

- Follow-up audits may be initiated by the QA Manager and shall be performed as soon as possible when the identification of a nonconformance casts doubt on the laboratory's compliance with its own policies and procedures, or on its compliance with state or federal requirements.
- These audits often follow the implementation of the corrective actions to verify effectiveness. An additional audit would only be necessary when a critical issue or risk to business is discovered.

(Also refer to Section 15.1.4, Special Audits.)

## 12.4 Technical Corrective Actions

In addition to providing acceptance criteria and specific protocols for technical corrective actions in the method SOPs, the laboratory has general procedures to be followed to determine when departures from the documented policies and procedures and quality control have occurred (refer to Section 11). The documentation of these procedures is through the use of an NCM or CAR.

Table 12-1 includes examples of general technical corrective actions. For specific criteria and corrective actions, refer to the analytical methods or specific method SOPs. The laboratory may also maintain Work Instructions on these items that are available upon request.

Table 12-1 provides some general guidelines for identifying the individual(s) responsible for assessing each QC type and initiating corrective action. The table also provides general guidance on how a data set should be treated if associated QC measurements are unacceptable. Specific procedures are included in Method SOPs, Work Instructions, QAM Sections 19 and 20. All corrective actions are reviewed monthly, at a minimum, by the QA Manager and highlights are included in the QA monthly report.

To the extent possible, samples shall be reported only if all quality control measures are acceptable. If the deficiency does not impair the usability of the results, data will be reported with

an appropriate data qualifier and/or the deficiency will be noted in the case narrative. Where sample results may be impaired, the Project Manager is notified by an NCM and appropriate corrective action (e.g., reanalysis) is taken and documented**.**

## 12.5 Basic Corrections

When mistakes occur in records, each mistake shall be crossed-out, [not obliterated (e.g. no white-out)], and the correct value entered alongside. All such corrections shall be initialed (or signed) and dated by the person making the correction. In the case of records stored electronically, the original "uncorrected" file must be maintained intact and a second "corrected" file is created.

This same process applies to adding additional information to a record. All additions made later than the initial must also be initialed (or signed) and dated.

When corrections are due to reasons other than obvious transcription errors, the reason for the corrections (or additions) shall also be documented.

**Figure 12-1.**
**Example - Corrective Action Report**

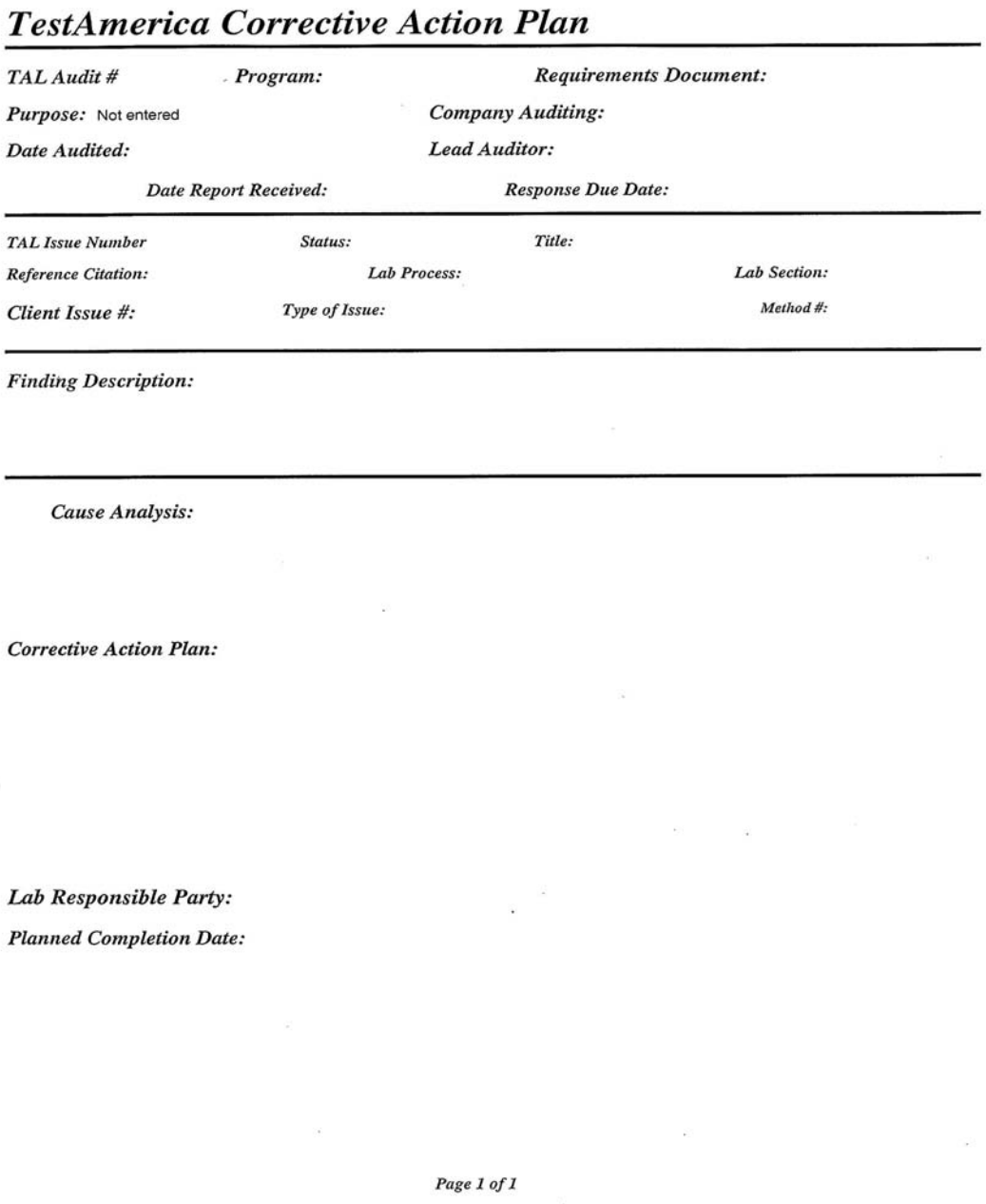

*TestAmerica Corrective Action Plan*

*TAL Audit #* *Program:* *Requirements Document:*

*Purpose:* Not entered *Company Auditing:*

*Date Audited:* *Lead Auditor:*

*Date Report Received:* *Response Due Date:*

*TAL Issue Number* *Status:* *Title:*

*Reference Citation:* *Lab Process:* *Lab Section:*

*Client Issue #:* *Type of Issue:* *Method #:*

*Finding Description:*

*Cause Analysis:*

*Corrective Action Plan:*

*Lab Responsible Party:*

*Planned Completion Date:*

*Page 1 of 1*

**Table 12-1. Example – General Corrective Action Procedures**

| QC Activity *(Individual Responsible for Initiation/Assessment)* | Acceptance Criteria | Recommended Corrective Action |
|---|---|---|
| Initial Instrument Blank<br><br>*(Analyst)* | - Instrument response < ½ RL. | - Prepare another blank.<br>- If same response, determine cause of contamination: reagents, environment, instrument equipment failure, etc.. |
| Initial Calibration Standards<br><br>*(Analyst, Technical Manager(s))* | - Correlation coefficient > 0.99.<br>- Standard concentrations should bracket reporting limit.<br>- % Recovery within acceptance range.<br>- See details in Method SOP. | - Reanalyze standards.<br>- If still unacceptable, remake standards and recalibrate instrument. |
| Independent Calibration Verification (Second Source)<br><br>*(Analyst, Technical Manager(s))* | - % Recovery within control limits as defined in the method SOPs. | - Remake and reanalyze standard.<br>- If still unacceptable, then remake calibration standards or use new primary standards and recalibrate instrument. |
| Continuing Calibration Standards<br><br>*(Analyst, Data Reviewer)* | % Recovery within control limits. | - Reanalyze standard.<br>- If still unacceptable, then recalibrate and rerun affected samples. |
| Matrix Spike / Matrix Spike Duplicate (MS/MSD)<br><br>*(Analyst, Data Reviewer)* | - % Recovery within limits documented in LIMS. | - If the acceptance criteria for duplicates or matrix spikes are not met because of matrix interferences, the acceptance of the analytical batch is determined by the validity of the LCS.<br>See SOP DV-QA-003P for detailed corrective actions. |
| Laboratory Control Sample (LCS)<br><br>*(Analyst, Data Reviewer)* | - % Recovery within limits specified in LIMS. | See SOP DV-QA-003P for detailed corrective actions. |
| Surrogates<br><br>*(Analyst, Data Reviewer)* | - % Recovery within limits of method or within three standard deviations of the historical mean. | See SOP DV-QA-003P for detailed corrective actions. |
| Method Blank (MB)<br><br>*(Analyst, Data Reviewer)* | < Reporting Limit [1] | See SOP DV-QA-003P for detailed corrective actions. |
| Proficiency Testing (PT) Samples<br><br>*(QA Manager, Technical Manager(s))* | - Criteria supplied by PT Supplier. | - Any failures or warnings must be investigated for cause. Failures may result in the need to repeat a PT sample to show the problem is corrected. |

| **QC Activity** ***(Individual Responsible for Initiation/Assessment)*** | **Acceptance Criteria** | **Recommended Corrective Action** |
|---|---|---|
| Internal / External Audits<br><br>*(QA Manager, Technical Manager(s), Laboratory Director)* | - Defined in Quality System documentation such as SOPs, QAM, etc. | - Non-conformances must be investigated through CAR system and necessary corrections must be made. |
| Reporting / Calculation Errors<br><br>(Depends on issue – possible individuals include: Analysts, Data Reviewers, Project Managers, Technical Managers, QA Manager, Corporate QA, Corporate Management) | - SOP CW-L-S-002, Internal Investigation of Potential Data Discrepancies and Determination for Data Recall. | - Corrective action is determined by type of error. Follow the procedures in SOP CW-L-S-002 and DV-QA-019P. |
| Client Complaints<br><br>*(Project Managers, Lab Director/Manager, Sales and Marketing)* | - | - Corrective action is determined by the type of complaint. For example, a complaint regarding an incorrect address on a report will result in the report being corrected and then follow-up must be performed on the reasons the address was incorrect (e.g., database needs to be updated). See SOP DV-QA-013P. |
| QA Monthly Report (Refer to Section 16 for an example)<br><br>(QA Manager, Lab Director/Manager, *Technical Manager(s)*) | - QAM, SOPs. | - Corrective action is determined by the type of issue. For example, CARs for the month are reviewed and possible trends are investigated. |
| Health and Safety Violation<br><br>(Safety Officer, Lab Director/Manager, *Technical Manager(s)*) | - Environmental Health and Safety (EHS) Manual. | - Non-conformance is investigated and corrected through CAR system. |

**Note:**
1. Except as noted below for certain compounds, the method blank should be below ½ the reporting limit. Concentrations up to five times the reporting limit will be allowed for the ubiquitous laboratory and reagent contaminants: methylene chloride, toluene, acetone, 2-butanone and phthalates **provided** they appear in similar levels in the reagent blank and samples. This allowance presumes that the detection limit is significantly below any regulatory limit to which the data are to be compared and that blank subtraction will not occur. For benzene and ethylene dibromide (EDB) and other analytes for which regulatory limits are extremely close to the detection limit, the method blank must be below the method detection limit.

## SECTION 13. PREVENTIVE ACTION / IMPROVEMENT

### 13.1 Overview

The laboratory's preventive action programs improve or eliminate potential causes of nonconforming product and/or nonconformance to the quality system. This preventive action process is a proactive and continuous process of improvement activities that can be initiated through feedback from clients, employees, business providers, and affiliates. The QA Department has the overall responsibility to ensure that the preventive action process is in place, and that relevant information on actions is submitted for management review.

Dedicating resources to an effective preventive action system emphasizes the laboratory's commitment to its Quality Program. It is beneficial to identify and address negative trends before they develop into complaints, problems and corrective actions. Additionally, customer service and client satisfaction can be improved through continuous improvements to laboratory systems.

Opportunities for improvement may be discovered during management reviews, the monthly QA Metrics Report, evaluation of internal or external audits, results & evaluation of proficiency testing (PT) performance, data analysis & review processing operations, client complaints, staff observation, etc.

The monthly Management Systems Metrics Report shows performance indicators in all areas of the laboratory and quality system. These areas include revised reports, corrective actions, audit findings, internal auditing and data authenticity audits, client complaints, PT samples, holding time violations, SOPs, ethics training, etc. These metrics are used in evaluating the management and quality system performance on an ongoing basis and provide a tool for identifying areas for improvement.

The laboratory's corrective action process is integral to implementation of preventive actions. A critical piece of the corrective action process is the implementation of actions to prevent further occurrence of a non-compliance event. Historical review of corrective action provides a valuable mechanism for identifying preventive action opportunities.

**13.1.1** The following elements are part of a preventive action system:

- Identification of an opportunity for preventive action.
- Process for the preventive action.
- Define the measurements of the effectiveness of the process once undertaken.
- Execution of the preventive action.
- Evaluation of the plan using the defined measurements.
- Verification of the effectiveness of the preventive action.
- Close-Out by documenting any permanent changes to the Quality System as a result of the Preventive Action. Documentation of Preventive Action is incorporated into the monthly QA reports, corrective action process and management review.

**13.1.2** Any Preventive Actions undertaken or attempted shall be taken into account during the annual Management Systems Review (Section 16). A highly detailed report is not required; however, a summary of successes and failures within the preventive action program is sufficient to provide management with a measurement for evaluation.

### 13.2 Management of Change

The Management of Change process is designed to manage significant events and changes that occur within the laboratory. Through these procedures, the potential risks inherent with a new event or change are identified and evaluated. The risks are minimized or eliminated through pre-planning and the development of preventive measures. The types of changes covered under this system include: Facility Changes, Major Accreditation Changes, Addition or Deletion to Division's Capabilities or Instrumentation, Key Personnel Changes, Laboratory Information Management System (LIMS) changes. This process is discussed in further detail in SOP # DV-QA-028P, *Management of Change.*

## SECTION 14. CONTROL OF RECORDS

The laboratory maintains a records management system appropriate to its needs and that complies with applicable standards or regulations as required. The system produces unequivocal, accurate records that document all laboratory activities. The laboratory retains all original observations, calculations and derived data, calibration records and a copy of the analytical report for a minimum of five years after it has been issued.

### 14.1 Overview

The laboratory has established procedures for identification, collection, indexing, access, filing, storage, maintenance and disposal of quality and technical records. A record index is listed in Table 14-1. Quality records are maintained by the QA department in a database, which is backed up as part of the regular laboratory backup. Records are of two types; either electronic

or hard copy paper formats depending on whether the record is computer or hand generated (some records may be in both formats). Technical records are maintained by the Department Manager or their designee.

**Table 14-1. Record Index[1]**

| | Record Types [1]: | Retention Time: |
|---|---|---|
| **Technical Records** | - Raw Data<br>- Logbooks[2]<br>- Standards<br>- Certificates<br>- Analytical Records<br>- MDLs/IDLs/DOCs<br>- Lab Reports | 5 Years from analytical report issue* |
| **Official Documents** | - Quality Assurance Manual (QAM)<br>- Work Instructions<br>- Policies<br>- SOPs<br>- Policy Memorandums<br>- Manuals | 5 Years from document retirement date* |
| **QA Records** | - Internal & External Audits/Responses<br>- Certifications<br>- Corrective/Preventive Actions<br>- Management Reviews<br>- Method & Software Validation / Verification Data<br>- Data Investigation | 5 Years from archival*<br><br>**Data Investigation:** 5 years or the life of the affected raw data storage whichever is greater (beyond 5 years if ongoing project or pending investigation) |
| **Project Records** | - Sample Receipt & COC Documentation<br>- Contracts and Amendments<br>- Correspondence<br>- QAPP<br>- SAP<br>- Telephone Logbooks<br>- Lab Reports | 5 Years from analytical report issue* |
| **Administrative Records** | Finance and Accounting | 10 years |
| | EH&S Manual, Permits | 7 years |
| | Disposal Records | Indefinitely |
| | Employee Handbook | Indefinitely |
| | Personnel files, Employee Signature & Initials, Administrative Training Records (e.g., Ethics) | 7 Years (HR Personnel Files must be maintained indefinitely) |
| | Administrative Policies<br>Technical Training Records | 7 years |

[1] Record Types encompass hardcopy and electronic records.

[2] Examples of Logbook types: Maintenance, Instrument Run, Preparation (standard and samples), Standard and Reagent Receipt, Archiving, Balance Calibration, Temperature (hardcopy or electronic records).
* Exceptions listed in Table 14-2.

**14.1.1** All records are stored and retained in such a way that they are secure and readily retrievable at the laboratory facility or the Iron Mountain data storage facility that provides a suitable environment to prevent damage or deterioration and to prevent loss. All records shall be protected against fire, theft, loss, environmental deterioration, and vermin. In the case of electronic records, electronic or magnetic sources, storage media are protected from deterioration caused by magnetic fields and/or electronic deterioration.

Access to the data is limited to laboratory and company employees and shall be documented with an access log**.** Records archived off-site are stored in a secure location where a record is maintained of any entry into the storage facility. Whether on-site or off-site storage is used, logs are maintained in each storage box to note removal and return of records. Records are maintained on-site at the laboratory for at least 3 months after their generation and moved offsite for the remainder of the required storage time. Records are maintained for a minimum of five years unless otherwise specified by a client or regulatory requirement.

For raw data and project records, record retention shall be calculated from the date the project report is issued. For other records, such as Controlled Documents, QA, or Administrative Records, the retention time is calculated from the date the record is formally retired. Records related to the programs listed in Table 14-2 have longer retention requirements and are subject to the requirements in Section 14.1.3.

### 14.1.2 Programs with Longer Retention Requirements

Some regulatory programs have longer record retention requirements than the standard record retention time. These are detailed in Table 14-2 with their retention requirements. In these cases, the longer retention requirement is enacted. If special instructions exist such that client data cannot be destroyed prior to notification of the client, the container or box containing that data is marked as to who to contact for authorization prior to destroying the data.

**Table 14-2. Example: Special Record Retention Requirements**

| Program | [1]Retention Requirement |
|---|---|
| DOE | Indefinite |
| Drinking Water – All States | 5 years (project records)<br>10 years - Radiochemistry (project records) |
| Drinking Water Lead and Copper Rule | 12 years (project records) |
| Commonwealth of MA – All environmental data 310 CMR 42.14 | 10 years |
| FIFRA – 40 CFR Part 160 | Retain for life of research or marketing permit for pesticides regulated by EPA |
| Housing and Urban Development (HUD) Environmental Lead Testing | 10 years |
| Alaska | 10 years |
| Louisiana – All | 10 years |
| Michigan Department of Environmental Quality – all environmental data | 10 years |
| Navy Facilities Engineering Service Center (NFESC) | 10 years |
| NY Potable Water NYCRR Part 55-2 | 10 years |
| Ohio VAP | 10 years and State contacted prior to disposal |
| TSCA - 40 CFR Part 792 | 10 years after publication of final test rule or negotiated test agreement |

[1]Note: Extended retention requirements must be noted with the archive documents or addressed in facility-specific records retention procedures.

**14.1.3** The laboratory has procedures to protect and back-up records stored electronically and to prevent unauthorized access to or amendment of these records. All analytical data is maintained as hard copy or in a secure readable electronic format. For analytical reports that are maintained as copies in PDF format, refer to Section 19.14.1 for more information. In addition, refer to SOP # DV-QA-025P, *Electronic Data Backup.*

**14.1.4** The record keeping system allows for historical reconstruction of all laboratory activities that produced the analytical data, as well as rapid recovery of historical data (Records stored off site should be accessible within 2 days of a request for such records). The history of the sample from when the laboratory took possession of the samples must be readily understood through the documentation. This shall include inter-laboratory transfers of samples and/or extracts.

- The records include the identity of personnel involved in sampling, sample receipt, preparation, or testing. All analytical work contains the initials (at least) of the personnel involved. The laboratory's copy of the COC is stored with the invoice and the work order sheet generated by the LIMS. The chain of custody would indicate the name of the sampler. If any sampling notes are provided with a work order, they are kept with this

package.

- All information relating to the laboratory facilities equipment, analytical test methods, and related laboratory activities, such as sample receipt, sample preparation, or data verification are documented.

- The record keeping system facilitates the retrieval of all working files and archived records for inspection and verification purposes (e.g., set format for naming electronic files, set format for what is included with a given analytical data set per SOP #DV-QA-0005, *Document Archiving Procedure*. Instrument data are stored sequentially by instrument. A given day's analyses are maintained in the order of the analysis. Run logs are maintained for each instrument or method; a copy of each day's run log or instrument sequence is stored with the data to aid in re-constructing an analytical sequence. Where an analysis is performed without an instrument, bound logbooks or bench sheets are used to record and file data. Standard and reagent information is recorded in logbooks or entered into the LIMS for each method as required.

- Changes to hardcopy records shall follow the procedures outlined in Section 12 and 19. Changes to electronic records in LIMS or instrument data are recorded in audit trails.

- The reason for a signature or initials on a document is clearly indicated in the records such as "sampled by," "prepared by," "reviewed by", or "analyzed by".

- All generated data except those that are generated by automated data collection systems, are recorded directly, promptly and legibly in permanent dark ink.

- Hard copy data may be scanned into PDF format for record storage as long as the scanning process can be verified in order to ensure that no data are lost and the data files and storage media must be tested to verify the laboratory's ability to retrieve the information prior to the destruction of the hard copy that was scanned. The procedure for this verification can be found in SOP #DV-QA-0005, *Document Archiving Procedure*.

- Also refer to Section 19.14.1 'Computer and Electronic Data Related Requirements'**.**

## 14.2 Technical and Analytical Records

**14.2.1** The laboratory retains records of original observations, derived data and sufficient information to establish an audit trail, calibration records, staff records and a copy of each analytical report issued, for a minimum of five years unless otherwise specified by a client or regulatory requirement. The records for each analysis shall contain sufficient information to enable the analysis to be repeated under conditions as close as possible to the original. The records shall include the identity of laboratory personnel responsible for the sampling, performance of each analysis and reviewing results.

**14.2.2** Observations, data and calculations are recorded real-time and are identifiable to the specific task.

**14.2.3** Changes to hardcopy records shall follow the procedures outlined in Section 12 and 19. Changes to electronic records in LIMS or instrument data are recorded in audit trails.

The essential information to be associated with analysis, such as strip charts, tabular printouts, computer data files, analytical notebooks, and run logs, include:

- laboratory sample ID code;
- Date of analysis; Time of Analysis is also required if the holding time is seventy-two (72) hours or less, or when time critical steps are included in the analysis (e.g., drying times, incubations, etc.); instrumental analyses have the date and time of analysis recorded as part of their general operations. Where a time critical step exists in an analysis, location for such a time is included as part of the documentation in a specific logbook or on a benchsheet.
- Instrumentation identification and instrument operating conditions/parameters. Operating conditions/parameters are typically recorded in instrument maintenance logs where available.
- analysis type;
- all manual calculations and manual integrations;
- analyst's or operator's initials/signature;
- sample preparation including cleanup, separation protocols, incubation periods or subculture, ID codes, volumes, weights, instrument printouts, meter readings, calculations, reagents;
- test results;
- standard and reagent origin, receipt, preparation, and use;
- calibration criteria, frequency and acceptance criteria;
- data and statistical calculations, review, confirmation, interpretation, assessment and reporting conventions;
- quality control protocols and assessment;
- electronic data security, software documentation and verification, software and hardware audits, backups, and records of any changes to automated data entries; and
- Method performance criteria including expected quality control requirements. These are indicated both in the LIMS and on specific analytical report formats.

## 14.3 Laboratory Support Activities

In addition to documenting all the above-mentioned activities, the following are retained QA records and project records (previous discussions in this section relate where and how these data are stored):

- all original raw data, whether hard copy or electronic, for calibrations, samples and quality control measures, including analysts' work sheets and data output records (chromatograms, strip charts, and other instrument response readout records)**;**

- a written description or reference to the specific test method used which includes a description of the specific computational steps used to translate parametric observations into a reportable analytical value;
- copies of final reports;
- archived SOPs;
- correspondence relating to laboratory activities for a specific project;
- all corrective action reports, audits and audit responses;
- proficiency test results and raw data; and
- results of data review, verification, and crosschecking procedures

### 14.3.1 Sample Handling Records

Records of all procedures to which a sample is subjected while in the possession of the laboratory are maintained. These include but are not limited to records pertaining to:

- sample preservation including appropriateness of sample container and compliance with holding time requirement;
- sample identification, receipt, acceptance or rejection and login;
- sample storage and tracking including shipping receipts, sample transmittal / COC forms; and
- procedures for the receipt and retention of samples, including all provisions necessary to protect the integrity of samples.

## 14.4 Administrative Records

The laboratory also maintains the administrative records in either electronic or hard copy form. Refer to Table 14-1.

## 14.5 Records Management, Storage and Disposal

All records (including those pertaining to test equipment), certificates and reports are safely stored, held secure and in confidence to the client. Certification related records are available upon request.

All information necessary for the historical reconstruction of data is maintained by the laboratory. Records that are stored only on electronic media must be supported by the hardware and software necessary for their retrieval.

Records that are stored or generated by computers or personal computers have hard copy, write-protected backup copies, or an electronic audit trail controlling access.

The laboratory has a record management system (a.k.a., document control) for control of

laboratory notebooks, instrument logbooks, standards logbooks, and records for data reduction, validation, storage and reporting. Laboratory notebooks are issued on a per analysis basis, and are numbered sequentially. All data are recorded sequentially within a series of sequential notebooks. Bench sheets are filed sequentially. Standards are maintained in the LIMS – no logbooks are used to record that data**.** Records are considered archived when noted as such in the records management system (a.k.a., document control.)

### 14.5.1 Transfer of Ownership

In the event that the laboratory transfers ownership or goes out of business, the laboratory shall ensure that the records are maintained or transferred according to client's instructions. Upon ownership transfer, record retention requirements shall be addressed in the ownership transfer agreement and the responsibility for maintaining archives is clearly established. In addition, in cases of bankruptcy, appropriate regulatory and state legal requirements concerning laboratory records must be followed. In the event of the closure of the laboratory, all records will revert to the control of the corporate headquarters. Should the entire company cease to exist, as much notice as possible will be given to clients and the accrediting bodies who have worked with the laboratory during the previous 5 years of such action.

### 14.5.2 Records Disposal

Records are removed from the archive and destroyed after 5 years unless otherwise specified by a client or regulatory requirement. On a project specific or program basis, clients may need to be notified prior to record destruction. Records are destroyed in a manner that ensures their confidentiality such as shredding, mutilation or incineration. (Refer to Tables 14-1 and 14-2).

Electronic copies of records must be destroyed by erasure or physically damaging off-line storage media so no records can be read.

If a third party records management company is hired to dispose of records, a "Certificate of Destruction" is required.

## SECTION 15. AUDITS

### 15.1 Internal Audits

Internal audits are performed to verify that laboratory operations comply with the requirements of the lab's quality system and with the external quality programs under which the laboratory operates. Audits are planned and organized by the QA staff. Personnel conducting the audits should be independent of the area being evaluated. Auditors will have sufficient authority, access to work areas, and organizational freedom necessary to observe all activities affecting quality and to report the assessments to laboratory management and**,** when requested**,** to corporate management.

Audits are conducted and documented as described in the TestAmerica Corporate SOP on performing internal auditing, SOP No. CW-Q-S-003. The types and frequency of routine internal

audits are described in Table 15-1. Special or ad hoc assessments may be conducted as needed under the direction of the QA staff.

**Table 15-1. Types of Internal Audits and Frequency**

| Description | Performed by | Frequency |
|---|---|---|
| Quality Systems Audits | QA Department, QA approved designee, or Corporate QA | All areas of the laboratory annually |
| Method Audits | Joint responsibility:<br>a) QA Manager or designee<br>b) Technical Manager or Designee<br>(Refer to CW-Q-S-003) | Methods Audits Frequency:<br>50% of methods annually<br>100% of methods annually (DoD Labs) |
| Special | QA Department or Designee | Surveillance or spot checks performed as needed, e.g., to confirm corrective actions from other audits. |
| Performance Testing | Analysts with QA oversight | Two successful per year for each TNI field of testing or as dictated by regulatory requirements |

### 15.1.1 Annual Quality Systems Audit

An annual quality systems audit is required to ensure compliance to analytical methods and SOPs, TestAmerica's Data Integrity and Ethics Policies, TNI quality systems, client and state requirements, and the effectiveness of the internal controls of the analytical process, including but not limited to data review, quality controls, preventive action and corrective action. The completeness of earlier corrective actions is assessed for effectiveness & sustainability. The audit is divided into sections for each operating or support area of the lab, and each section is comprehensive for a given area. The area audits may be performed on a rotating schedule throughout the year to ensure adequate coverage of all areas. This schedule may change as situations in the laboratory warrant.

### 15.1.2 QA Technical Audits

QA technical audits are based on client projects, associated sample delivery groups, and the methods performed. Reported results are compared to raw data to verify the authenticity of results. The validity of calibrations and QC results are compared to data qualifiers, footnotes, and case narratives. Documentation is assessed by examining run logs and records of manual integrations. Manual calculations are checked. Where possible, electronic audit miner programs (e.g., MintMiner and Chrom AuditMiner) used to identify unusual manipulations of the data deserving closer scrutiny. QA technical audits will include all methods within a two-year period.

### 15.1.3 SOP Method Compliance

Compliance of all SOPs with the source methods and compliance of the operational groups with the SOPs will be assessed by the Technical Manager or qualified designee at least every two years. It is also recommended that the work of each newly hired analyst is assessed within 3 months of working independently, (e.g., completion of method IDOC). In addition, as analysts add methods to their capabilities, (new IDOC) reviews of the analyst work products will be performed within 3 months of completing the documented training.

### 15.1.4 Special Audits

Special audits are conducted on an as needed basis, generally as a follow up to specific issues such as client complaints, corrective actions, PT results, data audits, system audits, validation comments, regulatory audits or suspected ethical improprieties. Special audits are focused on a specific issue, and report format, distribution, and timeframes are designed to address the nature of the issue.

### 15.1.5 Performance Testing

The laboratory participates semi-annually in performance audits conducted through the analysis of PT samples provided by a third party. The laboratory generally participates in the following types of PT studies: Drinking Water (WS), Nonpotable Water (WP), Soil, Underground Storage Tank (UST).

It is TestAmerica's policy that PT samples be treated as typical samples in the production process. Furthermore, where PT samples present special or unique problems, in the regular production process they may need to be treated differently, as would any special or unique request submitted by any client. The QA Manager must be consulted and in agreement with any decisions made to treat a PT sample differently due to some special circumstance.

Written responses to unacceptable PT results are required. In some cases it may be necessary for blind QC samples to be submitted to the laboratory to show a return to control.

## 15.2 External Audits

External audits are performed when certifying agencies or clients conduct on-site inspections or submit performance testing samples for analysis. It is TestAmerica's policy to cooperate fully with regulatory authorities and clients. The laboratory makes every effort to provide the auditors with access to personnel, documentation, and assistance. Laboratory supervisors are responsible for providing corrective actions to the QA Manager who coordinates the response for any deficiencies discovered during an external audit. Audit responses are due in the time allotted by the client or agency performing the audit. When requested, a copy of the audit report and the labs corrective action plan will be forwarded to Corporate Quality.

The laboratory cooperates with clients and their representatives to monitor the laboratory's performance in relation to work performed for the client. The client may only view data and systems related directly to the client's work. All efforts are made to keep other client information confidential.

### 15.2.1 Confidential Business Information (CBI) Considerations

During on-site audits, auditors may come into possession of information claimed as business confidential. A business confidentiality claim is defined as "a claim or allegation that business information is entitled to confidential treatment for reasons of business confidentiality or a request for a determination that such information is entitled to such treatment." When information is claimed as business confidential, the laboratory must place on (or attach to) the information at the time it is submitted to the auditor, a cover sheet, stamped or typed legend or other suitable form of notice, employing language such as "trade secret", "proprietary" or "company confidential". Confidential portions of documents otherwise non-confidential must be clearly identified. CBI may be purged of references to client identity by the responsible laboratory official at the time of removal from the laboratory. However, sample identifiers may not be obscured from the information. Additional information regarding CBI can be found in within the 2009 TNI standards.

## 15.3 Audit Findings

Audit findings are documented using the corrective action process and database. The laboratory's corrective action responses for both types of audits may include action plans that could not be completed within a predefined timeframe. In these instances, a completion date must be set and agreed to by operations management and the QA Manager.

Developing and implementing corrective actions to findings is the responsibility of the Technical Manager where the finding originated. Findings that are not corrected by specified due dates are reported monthly to management in the QA monthly report. When requested, a copy of the audit report and the labs corrective action plan will be forwarded to Corporate Quality.

If any audit finding casts doubt on the effectiveness of the operations or on the correctness or validity of the laboratory's test results, the laboratory shall take timely corrective action, and shall notify clients in writing if the investigations show that the laboratory results have been affected. Once corrective action is implemented, a follow-up audit is scheduled to ensure that the problem has been corrected.

Clients must be notified promptly in writing, of any event such as the identification of defective measuring or test equipment that casts doubt on the validity of results given in any test report or amendment to a test report. The investigation must begin within 24-hours of discovery of the problem and all efforts are made to notify the client within two weeks after the completion of the investigation.

# SECTION 16. MANAGEMENT REVIEWS

## 16.1 Quality Assurance Report

A comprehensive QA Report shall be prepared each month by the laboratory's QA Department and forwarded to the Laboratory Director, Technical Managers, their Quality Director as well as the General Manager. All aspects of the QA system are reviewed to evaluate the suitability of

policies and procedures. During the course of the year, the Laboratory Director, General Manager or Corporate QA may request that additional information be added to the report.

On a monthly basis, Corporate QA compiles information from all the monthly laboratory reports. The Corporate Quality Directors prepare a report that includes a compilation of all metrics and notable information and concerns regarding the QA programs within the laboratories. The report also includes a listing of new regulations that may potentially impact the laboratories. This report is presented to the Senior Management Team and General Managers.

### 16.2 Annual Management Review

The senior lab management team (Laboratory Director, Technical Managers, QA Manager) conducts a review annually of its quality systems and LIMS to ensure its continuing suitability and effectiveness in meeting client and regulatory requirements and to introduce any necessary changes or improvements. It will also provide a platform for defining goals, objectives and action items that feed into the laboratory planning system. Corporate Operations and Corporate QA personnel are to be included in this meeting at the discretion of the Laboratory Director. The LIMS review consists of examining any audits, complaints or concerns that have been raised through the year that are related to the LIMS. The laboratory will summarize any critical findings that cannot be solved by the lab and report them to Corporate IT.

This management systems review (Corporate SOP No. CA-Q-S-008 & Work Instruction No. CA-Q-WI-020) uses information generated during the preceding year to assess the “big picture” by ensuring that routine actions taken and reviewed on a monthly basis are not components of larger systematic concerns. The monthly review should keep the quality systems current and effective, therefore, the annual review is a formal senior management process to review specific existing documentation. Significant issues from the following documentation are compiled or summarized by the QA Manager prior to the review meeting:

- Matters arising from the previous annual review.
- Prior Monthly QA Reports issues.
- Laboratory QA Metrics.
- Review of report reissue requests.
- Review of client feedback and complaints.
- Issues arising from any prior management or staff meetings.
- Minutes from prior senior lab management meetings. Issues that may be raised from these meetings include:
    - Adequacy of staff, equipment and facility resources.
    - Adequacy of policies and procedures.
    - Future plans for resources and testing capability and capacity.
- The annual internal double blind PT program sample performance (if performed).
- Compliance to the Ethics Policy and Data Integrity Plan, including any evidence/incidents of inappropriate actions or vulnerabilities related to data Integrity.

A report is generated by the QA Manager and management. The report is distributed to the appropriate General Manager and the Quality Director. The report includes, but is not limited to:

- The date of the review and the names and titles of participants.
- A reference to the existing data quality related documents and topics that were reviewed.
- Quality system or operational changes or improvements that will be made as a result of the review [e.g., an implementation schedule including assigned responsibilities for the changes (Action Table)].

Changes to the quality systems requiring update to the laboratory QA Manual shall be included in the next revision of the QA Manual.

### 16.3 Potential Integrity Related Managerial Reviews

Potential integrity issues (data or business related) must be handled and reviewed in a confidential manner until such time as a follow-up evaluation, full investigation, or other appropriate actions have been completed and issues clarified. TestAmerica's Corporate Data Investigation/Recall SOP shall be followed (SOP No. CW-L-S-002). All investigations that result in a finding of inappropriate activity are documented and include any disciplinary actions involved, corrective actions taken, and all appropriate notifications of clients.

TestAmerica's VP of Client & Technical Services, General Managers and Quality Directors receive a monthly report from the Director of Quality & Client Advocacy summarizing any current data integrity or data recall investigations. The General Manager's are also made aware of progress on these issues for their specific labs.

## SECTION 17. PERSONNEL

### 17.1 Overview

The laboratory's management believes that its highly qualified and professional staff is the single most important aspect in assuring a high level of data quality and service. The staff consists of professionals and support personnel as outlined in the organization chart in Figure 4-1.

All personnel must demonstrate competence in the areas where they have responsibility. Any staff that is undergoing training shall have appropriate supervision until they have demonstrated their ability to perform their job function on their own. Staff shall be qualified for their tasks based on appropriate education, training, experience and/or demonstrated skills as required.

The laboratory employs sufficient personnel with the necessary education, training, technical knowledge and experience for their assigned responsibilities.

All personnel are responsible for complying with all QA/QC requirements that pertain to the laboratory and their area of responsibility. Each staff member must have a combination of experience and education to adequately demonstrate a specific knowledge of their particular

area of responsibility. Technical staff must also have a general knowledge of lab operations, test methods, QA/QC procedures and records management.

Laboratory management is responsible for formulating goals for lab staff with respect to education, training and skills and ensuring that the laboratory has a policy and procedures for identifying training needs and providing training of personnel. The training shall be relevant to the present and anticipated responsibilities of the lab staff.

The laboratory only uses personnel that are employed by or under contract to, the laboratory. Contracted personnel, when used, must meet competency standards of the laboratory and work in accordance to the laboratory's quality system.

## 17.2 Education and Experience Requirements for Technical Personnel

The laboratory makes every effort to hire analytical staffs that possess a college degree (AA, BA, BS) in an applied science with some chemistry in the curriculum. Exceptions can be made based upon the individual's experience and ability to learn. Selection of qualified candidates for laboratory employment begins with documentation of minimum education, training, and experience prerequisites needed to perform the prescribed task. Minimum education and training requirements for TestAmerica employees are outlined in job descriptions and are generally summarized for analytical staff in the table below.

The laboratory maintains job descriptions for all personnel who manage, perform or verify work affecting the quality of the environmental testing the laboratory performs. Job Descriptions are located on the TestAmerica intranet site's Human Resources web-page (Also see Section 4 for position descriptions/responsibilities).

Experience and specialized training are occasionally accepted in lieu of a college degree (basic lab skills such as using a balance, colony counting, aseptic or quantitation techniques, etc., are also considered).

As a general rule for analytical staff:

| Specialty | Education | Experience |
|---|---|---|
| Extractions, Digestions, some electrode methods (pH, DO, Redox, etc.), or Titrimetric and Gravimetric Analyses | H.S. Diploma | On the job training (OJT) |
| GFAA, CVAA, FLAA, Single component or short list Chromatography (e.g., Fuels, BTEX-GC, IC | A college degree in an applied science or 2 years of college and at least 1 year of college chemistry | Or 2 years prior analytical experience is required |
| ICP, ICPMS, Long List or complex chromatography (e.g., Pesticides, PCB, Herbicides, HPLC, etc.), GCMS | A college degree in an applied science or 2 years of college chemistry | or 5 years of prior analytical experience |

| Specialty | Education | Experience |
|---|---|---|
| Spectra Interpretation | A college degree in an applied science or 2 years of college chemistry | And 2 years relevant experience<br>Or<br>5 years of prior analytical experience |
| Technical Managers– **General** | Bachelors Degree in an applied science or engineering with 24 semester hours in chemistry<br><br>An advanced (MS, PhD.) degree may substitute for one year of experience | And 2 years experience in environmental analysis of representative analytes for which they will oversee |
| Technical Managers – **Wet Chem** only (no advanced instrumentation) | Associates degree in an applied science or engineering or 2 years of college with 16 semester hours in chemistry | And 2 years relevant experience |
| Technical Managers - Microbiology | Bachelors degree in applied science with at least 16 semester hours in general microbiology and biology<br><br>An advanced (MS, PhD.) degree may substitute for one year of experience | And 2 years of relevant experience |

When an analyst does not meet these requirements, they can perform a task under the direct supervision of a qualified analyst, peer reviewer or Technical Manager, and are considered an analyst in training. The person supervising an analyst in training is accountable for the quality of the analytical data and must review and approve data and associated corrective actions.

### 17.3 Training

The laboratory is committed to furthering the professional and technical development of employees at all levels.

Orientation to the laboratory's policies and procedures, in-house method training, and employee attendance at outside training courses and conferences all contribute toward employee proficiency. Below are examples of various areas of required employee training:

| Required Training | Time Frame | Employee Type |
|---|---|---|
| Environmental Health & Safety | Prior to lab work | All |
| Ethics – New Hires | 1 week of hire | All |
| Ethics – Comprehensive | 90 days of hire | All |
| Data Integrity | 30 days of hire | Technical and PMs |
| Quality Assurance | 90 days of hire | All |
| Ethics – Comprehensive Refresher | Annually | All |
| Initial Demonstration of Capability (DOC) | Prior to unsupervised method performance | Technical |

The laboratory maintains records of relevant authorization/competence, education, professional qualifications, training, skills and experience of technical personnel (including contracted personnel) as well as the date that approval/authorization was given. These records are kept on file at the laboratory. Also refer to "Demonstration of Capability" in Section 19.

The training of technical staff is kept up to date by:

- Each employee must have documentation in the training file that they have read, understood and agreed to follow the most recent version of the laboratory QA Manual and SOPs in their area of responsibility. This documentation is updated as SOPs are updated.
- Documentation from any training courses or workshops on specific equipment, analytical techniques or other relevant topics is maintained in their training file.
- Documentation of proficiency (refer to Section 19).
- An Ethics Agreement signed by each staff member (renewed each year) and evidence of annual ethics training.
- A Confidentiality Agreement signed by each staff member signed at the time of employment.
- Human Resources maintains documentation and attestation forms on employment status & records; benefit programs; timekeeping/payroll; and employee conduct (e.g., ethics). This information is maintained in the employee's secured personnel file.

Evidence of successful training could include such items as:

- Adequate documentation of training within operational areas, including one-on-one technical training for individual technologies, and particularly for people cross-trained.
- Analysts knowledge to refer to QA Manual for quality issues.
- Analysts following SOPs, i.e., practice matches SOPs.
- Analysts regularly communicate to supervisors and QA if SOPs need revision, rather than waiting for auditors to find problems.

Further details of the laboratory's training program are described in the Laboratory Training SOP DV-QA-0024.

### 17.4 Data Integrity and Ethics Training Program

Establishing and maintaining a high ethical standard is an important element of a Quality System. Ethics and data integrity training is integral to the success of TestAmerica and is provided for each employee at TestAmerica. It is a formal part of the initial employee orientation within 1 week of hire followed by technical data integrity training within 30 days, comprehensive training within 90 days, and an annual refresher for all employees. Senior management at each facility performs the ethics training for their staff.

In order to ensure that all personnel understand the importance TestAmerica places on maintaining high ethical standards at all times; TestAmerica has established a Corporate Ethics Policy (Policy No. CW-L-P-004 and an Ethics Statement. All initial and annual training is documented by signature on the signed Ethics Statement demonstrating that the employee has participated in the training and understands their obligations related to ethical behavior and data integrity.

Violations of this Ethics Policy will not be tolerated. Employees who violate this policy will be subject to disciplinary actions up to and including termination. Criminal violations may also be referred to the Government for prosecution. In addition, such actions could jeopardize TestAmerica's ability to do work on Government contracts, and for that reason, TestAmerica has a Zero Tolerance approach to such violations.

Employees are trained as to the legal and environmental repercussions that result from data misrepresentation. Key topics covered in the presentation include:

- Organizational mission and its relationship to the critical need for honesty and full disclosure in all analytical reporting.
- Ethics Policy
- How and when to report ethical/data integrity issues. Confidential reporting.
- Record keeping.
- Discussion regarding data integrity procedures.
- Specific examples of breaches of ethical behavior (e.g. peak shaving, altering data or computer clocks, improper macros, etc., accepting/offering kickbacks, illegal accounting practices, unfair competition/collusion)
- Internal monitoring. Investigations and data recalls.
- Consequences for infractions including potential for immediate termination, debarment, or criminal prosecution.
- Importance of proper written narration / data qualification by the analyst and project manager with respect to those cases where the data may still be usable but are in one sense or another partially deficient.

Additionally, a data integrity hotline (1-800-736-9407) is maintained by TestAmerica and administered by the Corporate Quality Department.

## SECTION 18. ACCOMMODATIONS AND ENVIRONMENTAL CONDITIONS

### 18.1 Overview

The laboratory is a 54,000 $ft^2$ secure laboratory facility with controlled access and designed to accommodate an efficient workflow and to provide a safe and comfortable work environment for employees. All visitors sign in and are escorted by laboratory personnel. Access is controlled by various measures.

The laboratory is equipped with structural safety features. Each employee is familiar with the location, use, and capabilities of general and specialized safety features associated with their workplace. The laboratory provides and requires the use of protective equipment including safety glasses, protective clothing, gloves, etc., OSHA and other regulatory agency guidelines regarding required amounts of bench and fume hood space, lighting, ventilation (temperature and humidity controlled), access, and safety equipment are met or exceeded.

Traffic flow through sample preparation and analysis areas is minimized to reduce the likelihood of contamination. Adequate floor space and bench top area is provided to allow unencumbered sample preparation and analysis space. Sufficient space is also provided for storage of reagents and media, glassware, and portable equipment. Ample space is also provided for refrigerated sample storage before analysis and archival storage of samples after analysis. Laboratory HVAC and deionized water systems are designed to minimize potential trace contaminants.

The laboratory is separated into specific areas for sample receiving, sample preparation, volatile organic sample analysis, non-volatile organic sample analysis, inorganic sample analysis, microbiological sample analysis, and administrative functions.

### 18.2 Environment

Laboratory accommodation, test areas, energy sources, and lighting are adequate to facilitate proper performance of tests. The facility is equipped with heating, ventilation, and air conditioning (HVAC) systems appropriate to the needs of environmental testing performed at this laboratory.

The environment in which these activities are undertaken does not invalidate the results or adversely affect the required accuracy of any measurements.

The laboratory provides for the effective monitoring, control and recording of environmental conditions that may affect the results of environmental tests as required by the relevant specifications, methods, and procedures. Such environmental conditions include humidity, voltage, temperature, and vibration levels in the laboratory.

When any of the method or regulatory required environmental conditions change to a point where they may adversely affect test results, analytical testing will be discontinued until the environmental conditions are returned to the required levels.

Environmental conditions of the facility housing the computer network and LIMS are regulated to protect against raw data loss.

## 18.3 Work Areas

There is effective separation between neighboring areas when the activities therein are incompatible with each other. Examples include:

- Microbiological culture handling and sample incubation areas.
- Volatile organic chemical handling areas, including sample preparation and waste disposal, and volatile organic chemical analysis areas.

Access to and use of all areas affecting the quality of analytical testing is defined and controlled by secure access to the laboratory building as described below in the Building Security section.

Adequate measures are taken to ensure good housekeeping in the laboratory and to ensure that any contamination does not adversely affect data quality. These measures include regular cleaning to control dirt and dust within the laboratory. Work areas are available to ensure an unencumbered work area. Work areas include:

- Access and entryways to the laboratory.
- Sample receipt areas.
- Sample storage areas.
- Chemical and waste storage areas.
- Data handling and storage areas.
- Sample processing areas.
- Sample analysis areas.

Refer to the following documents and procedures for specific requirements for microbiological laboratory facility requirements.

- Standard Methods, 20$^{th}$ Ed., 9020B, Sec. 2
- TNI V1M5, 1.7.3.7.a

## 18.4 Floor Plan

A floor plan can be found in Appendix 1.

## 18.5 Building Security

Building keys and alarm codes are distributed to employees as necessary.

Visitors to the laboratory sign in and out in a visitor's logbook. A visitor is defined as any person who visits the laboratory who is not an employee of the laboratory. In addition to signing into the laboratory, the Environmental, Health and Safety Manual contains requirements for visitors and vendors. There are specific safety forms that must be reviewed and signed. Visitors (with the exception of company employees) are escorted by laboratory personnel at all times, or the location of the visitor is noted in the visitor's logbook.

## SECTION 19. TEST METHODS AND METHOD VALIDATION

### 19.1 Overview

The laboratory uses methods that are appropriate to meet our clients' requirements and that are within the scope of the laboratory's capabilities. These include sampling, handling, transport, storage and preparation of samples, and, where appropriate, an estimation of the measurement of uncertainty as well as statistical techniques for analysis of environmental data.

Instructions are available in the laboratory for the operation of equipment as well as for the handling and preparation of samples. All instructions, Standard Operating Procedures (SOPs), reference methods and manuals relevant to the working of the laboratory are readily available to all staff. Deviations from published methods are documented (with justification) in the laboratory's approved SOPs. SOPs are submitted to clients for review at their request. Significant deviations from published methods require client approval and regulatory approval where applicable.

### 19.2 Standard Operating Procedures (SOPS)

The laboratory maintains SOPs that accurately reflect all phases of the laboratory such as assessing data integrity, corrective actions, handling customer complaints as well as all analytical methods and sampling procedures. The method SOPs are derived from the most recently promulgated/approved, published methods and are specifically adapted to the laboratory facility. Modifications or clarifications to published methods are clearly noted in the SOPs. All SOPs are controlled in the laboratory.

- All SOPs contain a revision number, effective date, and appropriate approval signatures. Controlled copies are available to all staff.
- Procedures for writing an SOP are incorporated by reference to TestAmerica's Corporate SOP entitled 'Writing a Standard Operating Procedure', No. CW-Q-S-002 or the laboratory's SOP DV-QA-001P.
- SOPs are reviewed at a minimum of every 2 years (annually for Drinking Water and DoD SOPs), and where necessary, revised to ensure continuing suitability and compliance with applicable requirements.

### 19.3 Laboratory Methods Manual

For each test method, the laboratory shall have available the published referenced method as well as the laboratory developed SOP.

**Note:** If more stringent standards or requirements are included in a mandated test method or regulation than those specified in this manual, the laboratory shall demonstrate that such requirements are met. If it is not clear which requirements are more stringent, the standard from the method or regulation is to be followed. Any exceptions or deviations from the referenced methods or regulations are noted in the specific analytical SOP.

The laboratory maintains an SOP Index for both technical and non-technical SOPs. Technical SOPs are maintained to describe a specific test method. Non-technical SOPs are maintained to describe functions and processes not related to a specific test method.

## 19.4 Selection of Methods

Since numerous methods and analytical techniques are available, continued communication between the client and laboratory is imperative to assure the correct methods are utilized. Once client methodology requirements are established, this and other pertinent information is summarized by the Project Manager. These mechanisms ensure that the proper analytical methods are applied when the samples arrive for log-in. For non-routine analytical services (e.g., special matrices, non-routine compound lists), the method of choice is selected based on client needs and available technology. The methods selected should be capable of measuring the specific parameter of interest, in the concentration range of interest, and with the required precision and accuracy.

### 19.4.1 Sources of Methods

Routine analytical services are performed using standard EPA-approved methodology. In some cases, modification of standard approved methods may be necessary to provide accurate analyses of particularly complex matrices. When the use of specific methods for sample analysis is mandated through project or regulatory requirements, only those methods shall be used.

When clients do not specify the method to be used or methods are not required, the methods used will be clearly validated and documented in an SOP and available to clients and/or the end user of the data.

The analytical methods used by the laboratory are those currently accepted and approved by the U. S. EPA and the state or territory from which the samples were collected. Reference methods include:

- *Guidelines Establishing Test Procedures for the Analysis of Pollutants Under the Clean Water Act, and Appendix A-C; 40 CFR Part 136, USEPA Office of Water. Revised as of July 1, 1995, Appendix A to Part 136 - Methods for Organic Chemical Analysis of Municipal and Industrial Wastewater (EPA 600 Series)*
- *Methods for Chemical Analysis of Water and Wastes, EPA 600 (4-79-020), 1983.*
- *Methods for the Determination of Inorganic Substances in Environmental Samples, EPA-600/R-93/100, August 1993.*
- *Methods for the Determination of Metals in Environmental Samples, EPA/600/4-91/010, June 1991. Supplement I: EPA-600/R-94/111, May 1994.*

- *Methods for the Determination of Organic Compounds in Drinking Water, EPA-600/4-88-039, December 1988, Revised, July 1991, Supplement I, EPA-600-4-90-020, July 1990, Supplement II, EPA-600/R-92-129, August 1992. Supplement III EPA/600/R-95/131 - August 1995 (EPA 500 Series) (EPA 500 Series methods)*
- *Technical Notes on Drinking Water Methods, EPA-600/R94-173, October 1994*
- *Statement of Work for Inorganics & Organics Analysis, SOM and ISM, current versions, USEPA Contract Laboratory Program Multi-media, Multi-concentration.*
- *Standard Methods for the Examination of Water and Wastewater, 18th/19th /20th/ on-line edition; Eaton, A.D. Clesceri, L.S. Greenberg, A.E. Eds; American Water Works Association, Water Pollution Control Federation, American Public Health Association: Washington, D.C.*
- *Test Methods for Evaluating Solid Waste Physical/Chemical Methods (SW846), Third Edition, September 1986, Final Update I, July 1992, Final Update IIA, August 1993, Final Update II, September 1994; Final Update IIB, January 1995; Final Update III, December 1996; Final Update IV, January 2008.*
- *Annual Book of ASTM Standards, American Society for Testing & Materials (ASTM), Philadelphia, PA.*
- *National Status and Trends Program, National Oceanographic and Atmospheric Administration, Volume I-IV, 1985-1994.*
- *Manual for the Certification of Laboratories Analyzing Drinking Water (EPA 815-R-05-004, January 2005)*
- *Code of Federal Regulations (CFR) 40, Parts 136, 141, 172, 173, 178, 179 and 261*

The laboratory reviews updated versions to all the aforementioned references for adaptation based upon capabilities, instrumentation, etc., and implements them as appropriate. As such, the laboratory strives to perform only the latest versions of each approved method as regulations allow or require.

Other reference procedures for non-routine analyses may include methods established by specific states (e.g., Underground Storage Tank methods), ASTM or equipment manufacturers. Sample type, source, and the governing regulatory agency requiring the analysis will determine the method utilized.

The laboratory shall inform the client when a method proposed by the client may be inappropriate or out of date. After the client has been informed, and they wish to proceed contrary to the laboratory's recommendation, it will be documented.

### 19.4.2 Demonstration of Capability

Before the laboratory may institute a new method and begin reporting results, the laboratory shall confirm that it can properly operate the method. In general, this demonstration does not test the performance of the method in real world samples, but in an applicable and available clean matrix sample. If the method is for the testing of analytes that are not conducive to spiking, demonstration of capability may be performed on quality control samples.

A demonstration of capability (DOC, DV-QA-0024) is performed whenever there is a change in instrument type (e.g., new instrumentation), method or personnel (e.g., analyst hasn't performed the test within the last 12 months).

The initial demonstration of capability must be thoroughly documented and approved by the Technical Director and QA Manager prior to independently analyzing client samples. All associated documentation must be retained in accordance with the laboratories archiving procedures.

The laboratory must have an approved SOP, demonstrate satisfactory performance, and conduct an MDL study (when applicable). There may be other requirements as stated within the published method or regulations (i.e., retention time window study).

**Note:** In some instances, a situation may arise where a client requests that an unusual analyte be reported using a method where this analyte is not normally reported. If the analyte is being reported for regulatory purposes, the method must meet all procedures outlined within this QA Manual (SOP, MDL, and Demonstration of Capability). If the client states that the information is not for regulatory purposes, the result may be reported as long as the following criteria are met:

- The instrument is calibrated for the analyte to be reported using the criteria for the method and ICV/CCV criteria are met (unless an ICV/CCV is not required by the method or criteria are per project DQOs).
- The laboratory's nominal or default reporting limit (RL) is equal to the quantitation limit (QL), must be at or above the lowest non-zero standard in the calibration curve and must be reliably determined. Project RLs are client specified reporting levels which may be higher than the QL. Results reported below the QL must be qualified as estimated values. Also see Section 19.6.1.3, Relationship of Limit of Detection (LOD) to Quantitation Limit (QL).
- The client request is documented and the lab informs the client of its procedure for working with unusual compounds. The final report must be footnoted: *Reporting Limit based on the low standard of the calibration curve.*

### 19.4.3 Initial Demonstration of Capability (IDOC) Procedures

**19.4.3.1** Refer to SOP DV-QA-0024, Training.

Note: Results of successive LCS analyses can be used to fulfill the DOC requirement.

A certification statement (refer to Figure 19-1 as an example shall be used to document the completion of each initial demonstration of capability. A copy of the certification is archived in the analyst's training folder.

Methods on line prior to the effective date of this Section shall be updated to the procedures outlined above as new analysts perform their demonstration of capability. A copy of the new record will replace that which was used for documentation in the past. At a minimum, the

precision and accuracy of four mid-level laboratory control samples must have been compared to the laboratory's quality control acceptance limits.

### 19.5 Laboratory Developed Methods and Non-Standard Methods

Any new method developed by the laboratory must be fully defined in an SOP and validated by qualified personnel with adequate resources to perform the method. Method specifications and the relation to client requirements must be clearly conveyed to the client if the method is a non-standard method (not a published or routinely accepted method). The client must also be in agreement to the use of the non-standard method.

### 19.6 Validation of Methods

Validation is the confirmation by examination and the provision of objective evidence that the particular requirements for a specific intended use are fulfilled.

All non-standard methods, laboratory designed/developed methods, standard methods used outside of their scope, and major modifications to published methods must be validated to confirm they are fit for their intended use. The validation will be as extensive as necessary to meet the needs of the given application. The results are documented with the validation procedure used and contain a statement as to the fitness for use.

#### 19.6.1 Method Validation and Verification Activities for All New Methods

While method validation can take various courses, the following activities are required as part of method validation. Method validation records are designated QC records and are archived accordingly.

##### 19.6.1.1 Determination of Method Selectivity

Method selectivity is the demonstrated ability to discriminate the analyte(s) of interest from other compounds in the specific matrix or matrices from other analytes or interference. In some cases to achieve the required selectivity for an analyte, a confirmation analysis is required as part of the method. For example for GC methods a confirmation analysis must be performed using a different column. This would not be necessary for mass spectrometry methods.

##### 19.6.1.2 Determination of Method Sensitivity

Sensitivity can be both estimated and demonstrated. Whether a study is required to estimate sensitivity depends on the level of method development required when applying a particular measurement system to a specific set of samples. Where estimations and/or demonstrations of sensitivity are required by regulation or client agreement, such as the procedure in 40 CFR Part 136 Appendix B, under the Clean Water Act, these shall be followed.

##### 19.6.1.3 Relationship of Limit of Detection (LOD) to the Quantitation Limit (QL)

An important characteristic of expression of sensitivity is the difference in the LOD and the QL. The LOD is the minimum level at which the presence of an analyte can be reliably concluded.

The QL is the minimum concentration of analyte that can be quantitatively determined with acceptable precision and bias. For most instrumental measurement systems, there is a region where semi-quantitative data is generated around the LOD (both above and below the estimated MDL or LOD) and below the QL. In this region, detection of an analyte may be confirmed but quantification of the analyte is unreliable within the accuracy and precision guidelines of the measurement system. When an analyte is detected below the QL, and the presence of the analyte is confirmed by meeting the qualitative identification criteria for the analyte, the analyte can be reliably reported, but the amount of the analyte can only be estimated. If data are to be reported in this region, it must be done so with a qualification that denotes the semi-quantitative nature of the result.

#### 19.6.1.4 Determination of Interferences

A determination that the method is free from interferences in a blank matrix is performed.

#### 19.6.1.5 Determination of Range

Where appropriate to the method, the quantitation range is determined by comparison of the response of an analyte in a curve to established or targeted criteria. Generally the upper quantitation limit is defined by highest acceptable calibration concentration. The lower quantitation limit or QL cannot be lower than the lowest non-zero calibration level, and can be constrained by required levels of bias and precision.

#### 19.6.1.6 Determination of Accuracy and Precision

Accuracy and precision studies are generally performed using replicate analyses, with a resulting percent recovery and measure of reproducibility (standard deviation, relative standard deviation) calculated and measured against a set of target criteria. An example of this would be to run various spike levels across the calibration range to verify acceptable accuracy and precision.

#### 19.6.1.7 Documentation of Method

The method is formally documented in an SOP. If the method is a minor modification of a standard laboratory method that is already documented in an SOP, an SOP Attachment describing the specific differences in the new method is acceptable in place of a separate SOP.

#### 19.6.1.8 Continued Demonstration of Method Performance

Continued demonstration of Method Performance is addressed in the SOP. Continued demonstration of method performance is generally accomplished by batch specific QC samples such as LCS, method blanks or PT samples.

### 19.7 Method Detection Limits (MDL) / Limits of Detection (LOD)

Method detection limits (MDL) are initially determined in accordance with 40 CFR Part 136, Appendix B or alternatively by other technically acceptable practices that have been accepted

by regulators. MDL is also sometimes referred to as Limit of Detection (LOD). The MDL theoretically represents the concentration level for each analyte within a method at which the Analyst is 99% confident that the true value is not zero. The MDL is determined for each analyte initially during the method validation process and updated as required in the analytical methods, whenever there is a significant change in the procedure or equipment, or based on project specific requirements. Generally, the analyst prepares at least seven replicates of solution spiked at one to five times the estimated method detection limit (most often at the lowest standard in the calibration curve) into the applicable matrix with all the analytes of interest. Each of these aliquots is extracted (including any applicable clean-up procedures) and analyzed in the same manner as the samples. Where possible, the seven replicates should be analyzed over 2-4 days to provide a more realistic MDL.

Refer to the Corporate SOP No. CA-Q-S-006 or the laboratory's SOP No. DV-QA-005P Determination of Method Detection Limits, for details on the laboratory's MDL process.

### 19.8 Instrument Detection Limits (IDL)

The IDL is sometimes used to assess the reasonableness of the MDLs or in some cases required by the analytical method or program requirements. IDLs are most used in metals analyses but may be useful in demonstration of instrument performance in other areas.

IDLs are calculated to determine an instrument's sensitivity independent of any preparation method. IDLs are calculated either using 7 replicate spike analyses, like MDL but without sample preparation, or by the analysis of 10 instrument blanks and calculating 3x the absolute value of the standard deviation.

If the IDL is > than the MDL, it may be used as the reported MDL.

### 19.9 Verification of Detection and Reporting Limits

Once the MDL is determined, it must be verified on each instrument used for the given method. TestAmerica defines the DoD QSM Detection Limit (DL) as being equal to the MDL. TestAmerica also defines the DoD QSM Limit of Detection (LOD) as being equal to the lowest concentration standard that successfully verifies the MDL, also referred to as the MDLV standard. MDL and MDLV standards are extracted/digested and analyzed through the entire analytical process. The MDL and MDLV determinations do not apply to methods that are not readily spiked (e.g. pH, turbidity, etc.) or where the lab does not report to the MDL. If the MDLV standard is not successful, then the laboratory will redevelop their MDL or perform and pass two consecutive MDLVs at a higher concentration and set the LOD at the higher concentration. Initial and quarterly verification is required for all methods listed in the laboratory's DoD ELAP Scope of Accreditation. Refer to the laboratory SOP DV-QA-005P, *Determination of Method Detection Limits* for further details.

The laboratory quantitation limit is equivalent to the DoD Limit of Quantitation (LOQ), which is at a concentration equal to or greater than the lowest non-zero calibration standard. The DoD QSM requires the laboratory to perform an initial characterization of the bias and precision at the LOQ and quarterly LOQ verifications thereafter. If the quarterly verification results are not

consistent with three-standard deviation confidence limits established initially, then the bias and precision will be reevaluated and clients contacted for any on-going projects. For DoD projects, TestAmerica makes a distinction between the Reporting Limit (RL) and the LOQ. The RL is a level at or above the LOQ that is used for specific project reporting purposes, as agreed to between the laboratory and the client. The RL cannot be lower than the LOQ concentration, but may be higher.

## 19.10 Retention Time Windows

Most organic analyses and some inorganic analyses use chromatography techniques for qualitative and quantitative determinations. For every chromatography analysis or as specific in the reference method, each analyte will have a specific time of elution from the column to the detector. This is known as the analyte's retention time. The variance in the expected time of elution is defined as the retention time window. As the key to analyte identification in chromatography, retention time windows must be established on every column for every analyte used for that method. These records are kept with the files associated with an instrument for later quantitation of the analytes. Complete details are available in the laboratory SOPs.

## 19.11 Evaluation of Selectivity

The laboratory evaluates selectivity by following the checks within the applicable analytical methods, which include mass spectral tuning, second column confirmation, ICP interelement interference checks, chromatography retention time windows, sample blanks, spectrochemical, atomic absorption or fluorescence profiles, co-precipitation evaluations and specific electrode response factors.

## 19.12 Estimation of Uncertainty of Measurement

**19.12.1** Uncertainty is "a parameter associated with the result of a measurement, that characterizes the dispersion of the values that could reasonably be attributed to the measurand" (as defined by the International Vocabulary of Basic and General Terms in Metrology, ISO Geneva, 1993, ISBN 92-67-10175-1). Knowledge of the uncertainty of a measurement provides additional confidence in a result's validity. Its value accounts for all the factors which could possibly affect the result, such as adequacy of analyte definition, sampling, matrix effects and interferences, climatic conditions, variances in weights, volumes, and standards, analytical procedure, and random variation. Some national accreditation organizations require the use of an "expanded uncertainty": the range within which the value of the measurand is believed to lie within at least a 95% confidence level with the coverage factor k=2.

**19.12.2** Uncertainty is not error. Error is a single value, the difference between the true result and the measured result. On environmental samples, the true result is never known. The measurement is the sum of the unknown true value and the unknown error. Unknown error is a combination of systematic error, or bias, and random error. Bias varies predictably, constantly, and independently from the number of measurements. Random error is unpredictable, assumed to be Gaussian in distribution, and reducible by increasing the number of measurements.

**19.12.3** The minimum uncertainty associated with results generated by the laboratory can be determined by using the Laboratory Control Sample (LCS) accuracy range for a given analyte. The LCS limits are used to assess the performance of the measurement system since they take into consideration all of the laboratory variables associated with a given test over time (except for variability associated with the sampling and the variability due to matrix effects). The percent recovery of the LCS is compared either to the method-required LCS accuracy limits or to the statistical, historical, in-house LCS accuracy limits.

**19.12.4** To calculate the uncertainty for the specific result reported, multiply the result by the decimal of the lower end of the LCS range percent value for the lower end of the uncertainty range, and multiply the result by the decimal of the upper end of the LCS range percent value for the upper end of the uncertainty range. These calculated values represent a 99%-certain range for the reported result. As an example, suppose that the result reported is 1.0 mg/L, and the LCS percent recovery range is 50 to 150%. The uncertainty range would be 0.5 to 1.5 mg/L, which could also be written as 1.0 +/- 0.5 mg/L.

**19.12.5** In the case where a well recognized test method specifies limits to the values of major sources of uncertainty of measurement (e.g., 524.2, 525, etc.) and specifies the form of presentation of calculated results, no further discussion of uncertainty is required.

## 19.13 Sample Reanalysis Guidelines

Because there is a certain level of uncertainty with any analytical measurement, a sample re-preparation (where appropriate) and subsequent analysis (hereafter referred to as 'reanalysis') may result in either a higher or lower value from an initial sample analysis. There are also variables that may be present (e.g., sample homogeneity, analyte precipitation over time, etc.) that may affect the results of a reanalysis. Based on the above comments, the laboratory will reanalyze samples at a client's request with the following caveats.

Note: Client specific Contractual Terms & Conditions for reanalysis protocols may supersede the following items.

- Homogenous samples: If a reanalysis agrees with the original result to within the RPD limits for MS/MSD or Duplicate analyses, or within $\pm$ 1 reporting limit for samples $\leq$ 5x the reporting limit, the original analysis will be reported. At the client's request, both results may be reported on the same report but not on two separate reports.

- If the reanalysis does not agree (as defined above) with the original result, then the laboratory will investigate the discrepancy and reanalyze the sample a third time for confirmation if sufficient sample is available.

- Any potential charges related to reanalysis are discussed in the contract terms and conditions or discussed at the time of the request. The client will typically be charged for reanalysis unless it is determined that the lab was in error.

- Due to the potential for increased variability, reanalysis may not be applicable to Non-homogenous, Encore, and Sodium Bisulfate preserved samples. See the Area Supervisor or Laboratory Director if unsure.

### 19.14 Control of Data

The laboratory has policies and procedures in place to ensure the authenticity, integrity, and accuracy of the analytical data generated by the laboratory.

#### 19.14.1 Computer and Electronic Data Related Requirements

The three basic objectives of our computer security procedures and policies are shown below. More detail is outlined in SOP DV-QA-017P, *Electronic Reporting*. The laboratory is currently running the TestAmerica Laboratory Information Management System which is a custom in-house developed LIMS system that has been highly customized to meet the needs of the laboratory. It is referred to as LIMS for the remainder of this section. The LIMS utilizes Sequel Server which is an industry standard relational database platform. It is referred to as Database for the remainder of this section.

**19.14.1.1 Maintain the Database Integrity:** Assurance that data is reliable and accurate through data verification (review) procedures, password-protecting access, anti-virus protection, data change requirements, as well as an internal LIMS permissions procedure.

- LIMS Database Integrity is achieved through data input validation, internal user controls, and data change requirements.
- Spreadsheets and other software developed in-house must be verified with documentation through hand calculations prior to use. Cells containing calculations must be lock-protected and controlled.
- Instrument hardware and software adjustments are safeguarded through maintenance logs, audit trails and controlled access.

**19.14.1.2 Ensure Information Availability:** Protection against loss of information or service is ensured through scheduled back-ups, stable file server network architecture, secure storage of media, line filter, Uninterruptible Power Supply (UPS), and maintaining older versions of software as revisions are implemented.

**19.14.1.3 Maintain Confidentiality:** Ensure data confidentiality through physical access controls such as password protection or website access approval when electronically transmitting data.

#### 19.14.2 Data Reduction

The complexity of the data reduction depends on the analytical method and the number of discrete operations involved (e.g., extractions, dilutions, instrument readings and concentrations). The analyst calculates the final results from the raw data or uses appropriate computer programs to assist in the calculation of final reportable values.

For manual data entry, e.g., Wet Chemistry, the data is reduced by the analyst and then verified by the Department Manager or alternate analyst prior to updating the data in LIMS. The data review checklists, are signed by both the analyst and alternate reviewer to confirm the accuracy of the manual entry(s).

Manual integration of peaks will be documented and reviewed and the raw data will be flagged in accordance with the TestAmerica Corporate SOP No. CA-Q-S-002, *Acceptable Manual Integration Practices*. and TestAmerica Denver SOP DV-QA-011P, *Acceptable Manual Integration Practices*.

Analytical results are reduced to appropriate concentration units specified by the analytical method, taking into account factors such as dilution, sample weight or volume, etc. Blank correction will be applied only when required by the method or per manufacturer's indication; otherwise, it should not be performed. Calculations are independently verified by appropriate laboratory staff. Calculations and data reduction steps for various methods are summarized in the respective analytical SOPs or program requirements.

**19.14.2.1** All raw data must be retained in the batch folder and batch file in LIMS. All criteria pertinent to the method must be recorded. The documentation is recorded at the time observations or calculations are made and must be signed or initialed/dated (month/day/year). It must be easily identifiable who performed which tasks if multiple people were involved.

**19.14.2.2** In general, concentration results are reported in milligrams per liter (mg/L) or micrograms per liter (µg/L) for liquids and milligrams per kilogram (mg/kg) or micrograms per kilogram (µg/kg) for solids. For values greater than 10,000 mg/L, results can be reported in percent, i.e., 10,000 mg/L = 1%**.** Units are defined in each lab SOP.

**19.14.2.3** In reporting, the analyst or the instrument output records the raw data result using values of known certainty plus one uncertain digit. If final calculations are performed external to LIMS, the results should be entered in LIMS with at least three significant figures. In general, results are reported to 2 significant figures on the final report. Refer to DV-QA-004P, *Rounding and Significant Figures* for details regarding the number of significant figures to report for each step in the process.

**19.14.2.4** For those methods that do not have an instrument printout or an instrumental output compatible with the LIMS System, the raw results and dilution factors are entered directly into LIMS by the analyst, and the software calculates the final result for the analytical report. When this is not possible the data is entered into a logbook which becomes part of the raw data. LIMS has a defined significant figure criterion for each analyte.

**19.14.2.5** The laboratory strives to import data directly from instruments or calculation spreadsheets to ensure that the reported data are free from transcription and calculation errors. For those analyses with an instrumental output compatible with the LIMS, the raw results and dilution factors are transferred into LIMS electronically after reviewing the quantitation report, and removing unrequested or poor spectrally-

matched compounds. The analyst reviews the values in LIMS against the raw results to check for errors. The instrument's calibrations, concentrations, retention times, chromatograms, and mass spectra, if applicable, are retained with the batch file in LIMS. In addition, the data file is stored in a monthly folder on the instrument computer; periodically, this file is transferred to the server and, eventually, to a tape file.

### 19.14.3 Logbook / Worksheet Use Guidelines

Logbooks and worksheets are filled out 'real time' and have enough information on them to trace the events of the applicable analysis/task. (e.g. calibrations, standards, analyst, sample ID, date, time on short holding time tests, temperatures when applicable, calculations are traceable, etc.)

- Corrections are made following the procedures outlined in Section 12.
- Logbooks are controlled by the QA department. A record is maintained of all logbooks in the lab.
- Unused portions of pages must be "Z"'d out, signed and dated.
- Worksheets are created with the approval of the Technical Director/QA Manager at the facility. The QA Manager controls all worksheets following the procedures in Section 6.

### 19.14.4 Review / Verification Procedures

Review procedures are out lined in several SOPs (e.g. DV-QA-0003, *Sample Management and Chain of Custody*, DV-QA-0020, *Data Review*, and DV-QA-0022, *Data Package Assembly),* to ensure that reported data are free from calculation and transcription errors, that QC parameters have been reviewed and evaluated before data is reported. The laboratory also has an SOP discussing Manual Integrations to ensure the authenticity of the data DV-QA-011P, *Acceptable Manual Integration Practices*. The general review concepts are discussed below, more specific information can be found in the SOPs.

**19.14.4.1** The data review process at the laboratory starts at the Sample Control level. Sample Control personnel review chain-of-custody forms and input the sample information and required analyses into a computer LIMS. The Sample Control Supervisor reviews the transaction of the chain-of-custody forms and the inputted information. The Project Managers perform final review of the chain-of-custody forms and inputted information.

**19.14.4.2** The next level of data review occurs with the Analysts. As results are generated, analysts review their work to ensure that the results generated meet QC requirements and relevant EPA methodologies. The Analysts transfer the data into the LIMS and add data qualifiers if applicable. To ensure data compliance, a different analyst performs a second level of review. Second level review is accomplished by checking reported results against raw data and evaluating the results for accuracy. During the second level review, blank runs, QA/QC check results, initial and continuing calibration results, laboratory control samples, sample data, qualifiers and spike information are evaluated. Where calibration is not required on a daily basis, secondary review of the initial calibration results may be conducted at the time of calibration. Approximately

15% of all sample data from manual methods and from automated methods, all GC/MS spectra and all manual integrations are reviewed. Manual integrations are also electronically reviewed utilizing auditing software to help ensure compliance to ethics and manual integration policies. Issues that deem further review include the following:

- QC data are outside the specified control limits for accuracy and precision
- Reviewed sample data does not match with reported results
- Unusual detection limit changes are observed
- Samples having unusually high results
- Samples exceeding a known regulatory limit
- Raw data indicating some type of contamination or poor technique
- Inconsistent peak integration
- Transcription errors
- Results outside of calibration range

**19.14.4.3** Unacceptable analytical results may require reanalysis of the samples. Any problems are brought to the attention of the Laboratory Director, Project Manager, Quality Assurance Director/Manager, Technical Manager, or Supervisor for further investigation. Corrective action is initiated whenever necessary.

**19.14.4.4** The results are then entered or directly transferred into the computer database and a hard copy (or .pdf) is printed for the client.

**19.14.4.5** As a final review prior to the release of the report, the Project Manager reviews the results for appropriateness and completeness. This review and approval ensures that client requirements have been met and that the final report has been properly completed. The process includes, but is not limited to, verifying that chemical relationships are evaluated, COC is followed, cover letters/ narratives are present, flags are appropriate, and project specific requirements are met.

**19.14.4.6** Any project that requires a data package is subject to a tertiary data review for transcription errors and acceptable quality control requirements. The Project Manager then signs the final report. The accounting personnel also check the report for any clerical or invoicing errors. When complete, the report is sent out to the client.

**19.14.4.7** A visual summary of the flow of samples and information through the laboratory, as well as data review and validation, is presented in Figure 19-2.

### 19.14.5 Manual Integrations

Computerized data systems provide the analyst with the ability to re-integrate raw instrument data in order to optimize the interpretation of the data. Though manual integration of data is an

invaluable tool for resolving variations in instrument performance and some sample matrix problems, when used improperly, this technique would make unacceptable data appear to meet quality control acceptance limits. Improper re-integrations lead to legally indefensible data, a poor reputation, or possible laboratory decertification. Because guidelines for re-integration of data are not provided in the methods and most methods were written prior to widespread implementation of computerized data systems, the laboratory trains all analytical staff on proper manual integration techniques using TestAmerica's Corporate SOP (CA-Q-S-002) as the guideline for our internal SOP No. DV-QA-011P, entitled *Acceptable Manual Integration Practices.*

**19.14.5.1** The analyst must adjust baseline or the area of a peak in some situations, for example when two compounds are not adequately resolved or when a peak shoulder needs to be separated from the peak of interest. The analyst must use professional judgment and common sense to determine when manual integrating is required. Analysts are encouraged to ask for assistance from a senior analyst or manager when in doubt.

**19.14.5.2** Analysts shall not increase or decrease peak areas for the sole purpose of achieving acceptable QC recoveries that would have otherwise been unacceptable. The intentional recording or reporting of incorrect information (or the intentional omission of correct information) is against company principals and policy and is grounds for immediate termination.

**19.14.5.3** Client samples, performance evaluation samples, and quality control samples are all treated equally when determining whether or not a peak area or baseline should be manually adjusted.

**19.14.5.4** All manual integrations receive a second level review. Manual integrations must be indicated on an expanded scale "after" chromatograms such that the integration performed can be easily evaluated during data review. Expanded scale "before" chromatograms are also required for all manual integrations on QC parameters (calibrations, calibration verifications, laboratory control samples, internal standards, surrogates, etc.) unless the laboratory has another documented corporate approved procedure in place that can demonstrate an active process for detection and deterrence of improper integration practices.

**Figure 19-1. Example - Demonstration of Capability Documentation**

TestAmerica
THE LEADER IN ENVIRONMENTAL TESTING

## Analyst
## July 16, 2010

**DV-OP-0016**
**Ultrasonic Extraction of Solid Samples**
**Method SW846 3550B and 3550C**

---

We the undersigned, CERTIFY that:

1. The analyst identified above, using the cited test method with the specifications in the cited SOP, which is in use at this facility for the analysis of samples under the TestAmerica Quality Assurance Manual, has met the Initial or Ongoing Demonstration of Capability.
2. The test method was performed by the analyst identified on this certification following the TestAmerica SOP and source method.
3. A copy of the laboratory-specific SOP and source method is available for all personnel on-site. These documents have been reviewed by the analyst as part of this Demonstration of Capability.
4. The data associated with the initial/ongoing demonstration of capability are true, accurate, complete and self-explanatory (*). These data are attached to this certification statement.
5. All raw data (including a copy of this certification form) necessary to reconstruct and validate these analyses have been retained at the facility, and that the associated information is well organized and available for review by authorized inspectors.

Comments/Observations:

---

Analyst's Name Signature & Date

---

Technical Director's Name Signature & Date

---

QA Manager's Name Signature & Date

**Figure 19-2. Example: Work Flow**

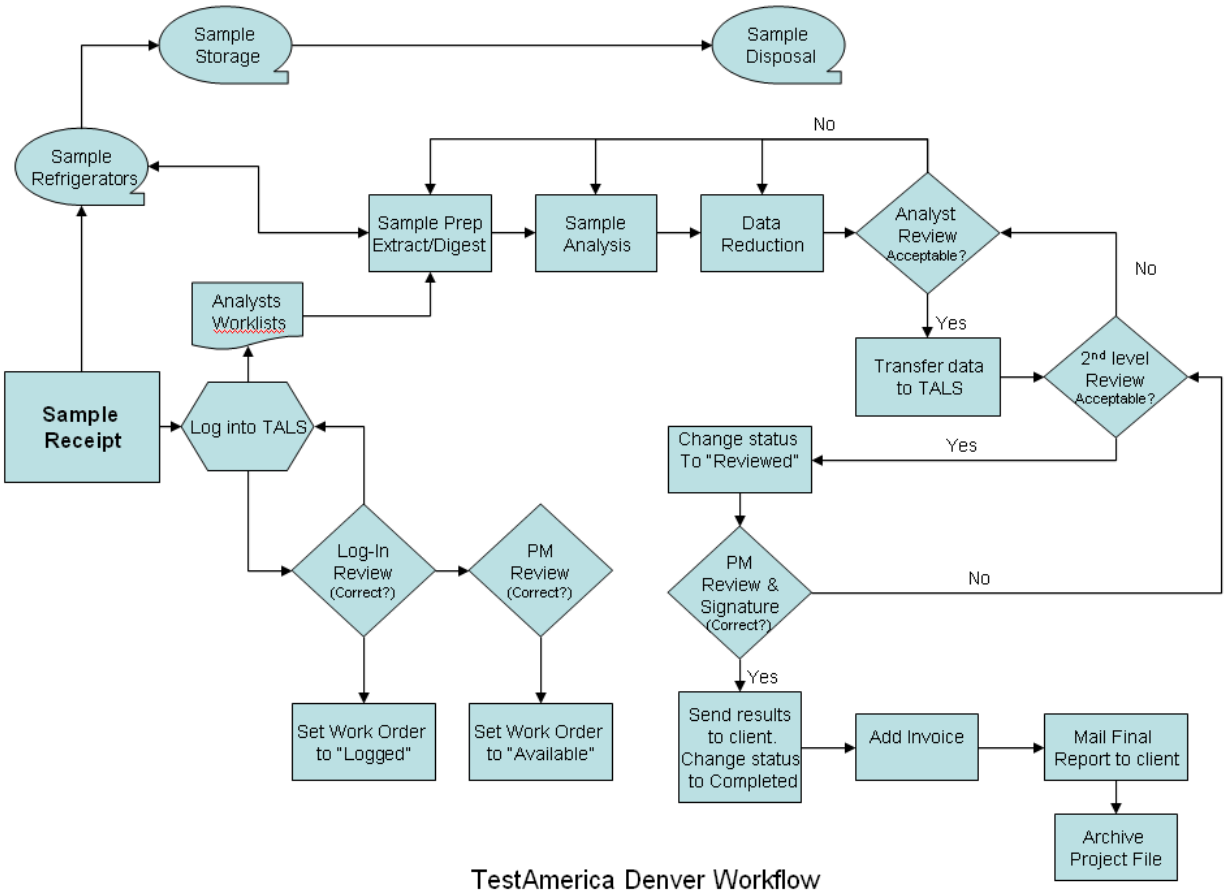

# SECTION 20. EQUIPMENT AND CALIBRATIONS

## 20.1 Overview

The laboratory purchases the most technically advanced analytical instrumentation for sample analyses. Instrumentation is purchased on the basis of accuracy, dependability, efficiency and sensitivity. Each laboratory is furnished with all items of sampling, preparation, analytical testing and measurement equipment necessary to correctly perform the tests for which the laboratory has capabilities. Each piece of equipment is capable of achieving the required accuracy and complies with specifications relevant to the method being performed. Before being placed into use, the equipment (including sampling equipment) is calibrated and checked to establish that it meets its intended specification. The calibration routines for analytical instruments establish the range of quantitation. Calibration procedures are specified in laboratory SOPs. A list of laboratory instrumentation is presented in Table 20-1.

Equipment is only operated by authorized and trained personnel. Manufacturers' instructions for equipment use are readily accessible to all appropriate laboratory personnel.

## 20.2 Preventive Maintenance

The laboratory follows a well-defined maintenance program to ensure proper equipment operation and to prevent the failure of laboratory equipment or instrumentation during use. This program of preventive maintenance helps to avoid delays due to instrument failure.

Routine preventive maintenance procedures and frequency, such as cleaning and replacements, should be performed according to the procedures outlined in the manufacturer's manual. Qualified personnel must also perform maintenance when there is evidence of degradation of peak resolution, a shift in the calibration curve, loss of sensitivity, or failure to continually meet one of the quality control criteria.

Table 20-2 lists examples of scheduled routine maintenance. It is the responsibility of each Technical Manager to ensure that instrument maintenance logs are kept for all equipment in his/her department. Preventative maintenance procedures may be/are also outlined in analytical SOPs or instrument manuals. (Note: for some equipment, the log used to monitor performance is also the maintenance log. Multiple pieces of equipment may share the same log as long as it is clear as to which instrument is associated with an entry.)

Instrument maintenance logs are controlled and are used to document instrument problems, instrument repair and maintenance activities. Maintenance logs shall be kept for all major pieces of equipment. Instrument maintenance logs may also be used to specify instrument parameters.

- Documentation must include all major maintenance activities such as contracted preventive maintenance and service and in-house activities such as the replacement of electrical components, lamps, tubing, valves, columns, detectors, cleaning and adjustments.
- Each entry in the instrument log includes the Analyst's initials, the date, a detailed description of the problem (or maintenance needed/scheduled), a detailed explanation of the solution or

maintenance performed, and a verification that the equipment is functioning properly (state what was used to determine a return to control. e.g. CCV run on *'date'* was acceptable, or instrument recalibrated on 'date' with acceptable verification, etc.) must also be documented in the instrument records.

- When maintenance or repair is performed by an outside agency, service receipts detailing the service performed can be affixed into the logbooks adjacent to pages describing the maintenance performed. This stapled in page must be signed across the page entered and the logbook so that it is clear that a page is missing if only half a signature is found in the logbook.

If an instrument requires repair (subjected to overloading or mishandling, gives suspect results, or otherwise has shown to be defective or outside of specified limits) it shall be taken out of operation and tagged as out-of-service or otherwise isolated until such a time as the repairs have been made and the instrument can be demonstrated as operational by calibration and/or verification or other test to demonstrate acceptable performance. The laboratory shall examine the effect of this defect on previous analyses.

In the event of equipment malfunction that cannot be resolved, service shall be obtained from the instrument vendor manufacturer, or qualified service technician, if such a service can be tendered. If on-site service is unavailable, arrangements shall be made to have the instrument shipped back to the manufacturer for repair. Back up instruments, which have been approved, for the analysis shall perform the analysis normally carried out by the malfunctioning instrument. If the back up is not available and the analysis cannot be carried out within the needed timeframe, the samples shall be subcontracted.

If an instrument is sent out for service or transferred to another facility, it must be recalibrated and verified (including new initial MDL study) prior to return to lab operations.

### 20.3 Support Equipment

This section applies to all devices that may not be the actual test instrument, but are necessary to support laboratory operations. These include but are not limited to: balances, ovens, refrigerators, freezers, incubators, water baths, temperature measuring devices, thermal/pressure sample preparation devices and volumetric dispensing devices if quantitative results are dependent on their accuracy, as in standard preparation and dispensing or dilution into a specified volume. All raw data records associated with the support equipment are retained to document instrument performance.

#### 20.3.1 Weights and Balances

The accuracy of the balances used in the laboratory is checked every working day, before use. All balances are placed on stable counter tops.

Each balance is checked prior to initial serviceable use with at least two certified ASTM type 1 weights spanning its range of use (weights that have been calibrated to ASTM type 1 weights may also be used for daily verification). ASTM type 1 weights used only for calibration of other weights (and no other purpose) are inspected for corrosion, damage or nicks at least annually

and if no damage is observed, they are calibrated at least every 5 years by an outside calibration laboratory. Any weights (including ASTM Type 1) used for daily balance checks or other purposes are recalibrated/recertified annually to NIST standards (this may be done internally if laboratory maintains "calibration only" ASTM type 1 weights).

All balances are serviced annually by a qualified service representative, who supplies the laboratory with a certificate that identifies traceability of the calibration to the NIST standards.

All of this information is recorded in logs, and the recalibration/recertification certificates are kept on file. Refer to SOP DV-QA-0014, *Balance Calibration Check*.

### 20.3.2 pH, Conductivity, and Turbidity Meters

The pH meters used in the laboratory are accurate to ± 0.1 pH units, and have a scale readability of at least 0.05 pH units. The meters automatically compensate for the temperature, and are calibrated with at least two working range buffer solutions before each use.

Conductivity meters are also calibrated before each use with a known standard to demonstrate the meters do not exceed an error of 1% or one umhos/cm.

Turbidity meters are also calibrated before each use. All of this information is documented in logs.

Consult pH and Conductivity, and Turbidity SOPs for further information.

### 20.3.3 Thermometers

All thermometers are calibrated on an annual basis with a NIST-traceable thermometer. IR thermometers, digital probes and thermocouples are calibrated quarterly**.**

The mercury NIST thermometer is recalibrated every five (unless thermometer has been exposed to temperature extremes or apparent separation of internal liquid) by an approved outside service and the provided certificate of traceability is kept on file. The NIST thermometer(s) have increments of 1 degree (0.5 degree or less increments are required for drinking water microbiological laboratories), and have ranges applicable to method and certification requirements. The NIST traceable thermometer is used for no other purpose than to calibrate other thermometers.

All of this information is documented in logbooks. Monitoring method-specific temperatures, including incubators, heating blocks, water baths, and ovens, is documented in method-specific logbooks. More information on this subject can be found in SOP DV-QA-0001, *Thermometer Calibration Procedure*.

### 20.3.4 Refrigerators/Freezer Units, Waterbaths, Ovens and Incubators

The temperatures of all refrigerator units and freezers used for sample and standard storage are monitored 7 days a week.

Ovens, waterbaths and incubators are monitored on days of use.

All of this equipment has a unique identification number, and is assigned a unique thermometer for monitoring.

Sample storage refrigerator temperatures are kept between > 0ºC and ≤ 6 ºC.

Specific temperature settings/ranges for other refrigerators, ovens waterbaths, and incubators can be found in method specific SOPs.

All of this information is documented in Daily Temperature Logbooks and method-specific logbooks.

### 20.3.5 Autopipettors, Dilutors, and Syringes

Mechanical volumetric dispensing devices including burettes (except Class A Glassware and Glass microliter syringes) are given unique identification numbers and the delivery volumes are verified gravimetrically, at a minimum, on a quarterly basis.

For those dispensers that are not used for analytical measurements, a label is / can be applied to the device stating that it is not calibrated. Any device not regularly verified cannot be used for any quantitative measurements. Refer to an SOP DV-QA-0008, *Calibration and Verification of Mechanical Pipettes.*

Micro-syringes are purchased from Hamilton Company. Each syringe is traceable to NIST. Syringes are verified for syringe sizes of ≥ 100 µL are verified. Details are in DV-QA-0008.

### 20.3.6 Autoclaves

TestAmerica Denver uses an autoclave for sterilization of microbiological equipment and used media only. All information regarding the autoclave is maintained in the Autoclave, Coliform lot, and Monthly check logbook. The information recorded includes the date, contents, maximum temperature, total run time and the analyst's initials.

Demonstration of sterilization of the autoclave is performed each time of use with a Diack sterilization monitor, a maximum reading thermometer, and temperature sensitive tape. On a monthly basis, spore strips are used for the determination of effective sterilization.

The autoclaves timing device is checked on a monthly basis against a clock/watch and the actual time elapsed is documented.

Any maintenance that is performed on the autoclave (internally or by service contract) is recorded in the maintenance section of the check logbook.

## 20.4 Instrument Calibrations

Calibration of analytical instrumentation is essential to the production of quality data. Strict calibration procedures are followed for each method. These procedures are designed to determine and document the method detection limits, the working range of the analytical instrumentation and any fluctuations that may occur from day to day.

Sufficient raw data records are retained to allow an outside party to reconstruct all facets of the initial calibration. Records contain, but are not limited to, the following: calibration date, method, instrument, analyst(s) initials or signatures, analysis date, analytes, concentration, response, type of calibration (Avg RF, curve, or other calculations that may be used to reduce instrument responses to concentration.)

Sample results must be quantitated from the initial calibration and may not be quantitated from any continuing instrument calibration verification unless otherwise required by regulation, method or program.

If the initial calibration results are outside of the acceptance criteria, corrective action is performed and any affected samples are reanalyzed if possible. If the reanalysis is not possible, any data associated with an unacceptable initial calibration will be reported with appropriate data qualifiers (refer to Section 12).

**Note:** Instruments are calibrated initially and as needed after that and at least annually.

### 20.4.1 Calibration Standards

Calibration standards are prepared using the procedures indicated in the Reagents and Standards section of the determinative method SOP. If a reference method does not specify the number of calibration standards, a minimum of 3 calibration points (exception being ICP and ICP/MS methods) will be used.

Standards for instrument calibration are obtained from a variety of sources. All standards are traceable to national or international standards of measurement, or to national or international standard reference materials.

The lowest concentration calibration standard that is analyzed during an initial calibration must be at or below the stated reporting limit for the method based on the final volume of extract (or sample).

The other concentrations define the working range of the instrument/method or correspond to the expected range of concentrations found in actual samples that are also within the working range of the instrument/method. Results of samples not bracketed by initial instrument calibration standards (within calibration range to at least the same number of significant figures used to report the data) must be reported as having less certainty, e.g., defined qualifiers or flags (additional information may be included in the case narrative). The exception to these rules is ICP methods or other methods where the referenced method does not specify two or more standards.

All initial calibrations are verified with a standard obtained from a second source and traceable to a national standard, when available (or vendor certified different lot if a second source is not available). For unique situations, such as Disodium Iminodiacetate (IDA) analysis where no other source or lot is available, a standard made by a different analyst at a different time or a different preparation would be considered a second source. This verification occurs immediately after the calibration curve has been analyzed, and before the analysis of any samples.

#### 20.4.1.1 Calibration Verification

The calibration relationship established during the initial calibration must be verified initially and at least daily as specified in the laboratory method SOPs in accordance with the referenced analytical methods and in the 2009 TNI Standard. The process of calibration verification applies to both external standard and internal standard calibration techniques, as well as to linear and non-linear calibration models. Initial calibration verification is with a standard source secondary (second source standard) to the calibration standards, but continuing calibration verifications may use the same source standards as the calibration curve.

**Note:** The process of calibration verification referred to here is fundamentally different from the approach called "calibration" in some methods. As described in those methods, the calibration factors or response factors calculated during calibration are used to update the calibration factors or response factors used for sample quantitation. This approach, while employed in other EPA programs, amounts to a daily single-point calibration.

All target analytes and surrogates, including those reported as non-detects, must be included in periodic calibration verifications for purposes of retention time confirmation and to demonstrate that calibration verification criteria are being met, i.e., RPD, per 2009 TNI Std. EL-V1M4 Sec. 1.7.2.

All samples must be bracketed by periodic analyses of standards that meet the QC acceptance criteria (e.g., calibration and retention time). The frequency is found in the determinative methods or SOPs.

Generally, the initial calibrations must be verified at the beginning of each 12-hour analytical shift during which samples are analyzed. (Some methods may specify more or less frequent verifications). The 12-hour analytical shift begins with the injection of the calibration verification standard (or the MS tuning standard in MS methods). The shift ends after the completion of the analysis of the last sample, QC, or standard that can be injected within 12 hours of the beginning of the shift.

A continuing instrument calibration verification (CCV) must be repeated at the beginning and, for methods that have quantitation by external calibration models, at the end of each analytical batch. Some methods have more frequent CCV requirements see specific SOPs. Most Inorganic methods require the CCV to be analyzed after ever 10 samples or injections, including matrix or batch QC samples.

**Note:** If an internal standard calibration is being used (e.g., GC/MS) then bracketing standards are not required, only daily verifications are needed. The results from these verification standards must meet the calibration verification criteria and the retention time criteria (if applicable).

If the results of a CCV are outside the established acceptance criteria and analysis of a second consecutive (and immediate) CCV fails to produce results within acceptance criteria, corrective action shall be performed. Once corrective actions have been completed & documented, the laboratory shall demonstrate acceptable instrument/method performance by analyzing two consecutive CCVs, or a new initial instrument calibration shall be performed.

Sample analyses and reporting of data may not occur or continue until the analytical system is calibrated or calibration verified. However, data associated with an unacceptable calibration verification may be fully useable under the following special conditions:

a) When the acceptance criteria for the CCV are exceeded high (i.e., high bias) and the associated samples within the batch are non-detects, then those non-detects may be reported with a footnote or case narrative explaining the high bias. Otherwise the samples affected by the unacceptable CCV shall be re-analyzed after a new calibration curve has been established, evaluated and accepted; or

b) When the acceptance criteria for the CCV are exceeded low (i.e., low bias), those sample results may be reported if they exceed a maximum regulatory limit/decision level. Otherwise the samples affected by the unacceptable CCV shall be re-analyzed after a new calibration curve has been established, evaluated and accepted.

Samples reported by the two conditions identified above will be appropriately flagged.

#### 20.4.1.2 Verification of Linear and Non-Linear Calibrations

Calibration verification for calibrations involves the calculation of the percent drift or the percent difference of the instrument response between the initial calibration and each subsequent analysis of the verification standard. (These calculations are available in the laboratory method SOPs. Verification standards are evaluated based on the % Difference from the average CF or RF of the initial calibration or based on % Drift or % Recovery if a linear or quadratic curve is used.

Regardless of whether a linear or non-linear calibration model is used, if initial verification criterion is not met, then no sample analyses may take place until the calibration has been verified or a new initial calibration is performed that meets the specifications listed in the method SOPs. If the calibration cannot be verified after the analysis of a single verification standard, then adjust the instrument operating conditions and/or perform instrument maintenance, and analyze another aliquot of the verification standard. If the calibration cannot be verified with the second standard, then a new initial calibration is performed.

- When the acceptance criteria for the calibration verification are exceeded high, i.e., high bias, and there are associated samples that are non-detects, then those non-detects may be

reported. Otherwise, the samples affected by the unacceptable calibration verification shall be reanalyzed after a new calibration curve has been established, evaluated and accepted.

- When the acceptance criteria for the calibration verification are exceeded low, i.e., low bias, those sample results may be reported if they exceed a maximum regulatory limit/decision level. Otherwise, the samples affected by the unacceptable verification shall be reanalyzed after a new calibration curve has been established, evaluated and accepted. Alternatively, a reporting limit standard may be analyzed to demonstrate that the laboratory can still support non-detects at their reporting limit.

## 20.5 Tentatively Identified Compounds (TICs) – GC/MS Analysis

For samples containing components not associated with the calibration standards, a library search may be made for the purpose of tentative identification. The necessity to perform this type of identification will be determined by the purpose of the analyses being conducted. Data system library search routines should not use normalization routines that would misrepresent the library or unknown spectra when compared to each other.

**Note:** If the TIC compound is not part of the client target analyte list but is calibrated by the laboratory and is both qualitatively and/or quantitatively identifiable, it should not be reported as a TIC. If the compound is reported on the same form as true TICs, it should be qualified and/or narrated that the reported compound is qualitatively and quantitatively (if verification in control) reported compared to a known standard that is in control (where applicable).

For example, the RCRA permit or waste delisting requirements may require the reporting of non-target analytes. Only after visual comparison of sample spectra with the nearest library searches may the analyst assign a tentative identification.

## 20.6 GC/MS Tuning

Prior to any GC/MS analytical sequence, including calibration, the instrument parameters for the tune and subsequent sample analyses within that sequence must be set.

Prior to tuning/auto-tuning the mass spec, the parameters may be adjusted within the specifications set by the manufacturer or the analytical method. These generally don't need any adjustment but it may be required based on the current instrument performance. If the tune verification does not pass it may be necessary to clean the source or perform additional maintenance. Any maintenance is documented in the maintenance log.

**Table 20-1. Example: Instrumentation List**

| Instrument Type | Manufacturer (Lab ID) | Model Number/ Serial Number | Year Put into Service | Method Performed |
|---|---|---|---|---|
| ICP | Thermo Fischer (025) | ICP 6500<br>S/N 20090307 | 2006 | 6010, 200.7 |
| ICP | Thermo Fischer (026) | ICP 6500<br>S/N 20063207 | 2006 | 6010, 200.7 |
| ICP/MS | Agilent ICP-MS (024) | 7500 Series<br>S/N JP51201530 | 2006 | 6020, 200.8 |
| ICP/MS | Agilent ICP-MS (077) | 7700 Series<br>S/N JP09320047 | 2009 | 6020, 200.8 |
| Mercury Analyzer | Cetac CVAA (033) | M-7500<br>S/N 08092QTA | 2010 | 7470, 7471, 245.1 |
| Mercury Analyzer | Cetac CVAA (034) | M-7500<br>S/N 0021105QTA | 2011 | 7470, 7471, 245.1 |
| Ion Chromatograph | Dionex (IC3) | DX-120<br>S/N 98040510 | 1997 | 300.0, 9056 9056A |
| Ion Chromatograph | Dionex (IC4) | AS 50<br>S/N 056537 | 2000 | Hydrazine, MMH, UDMH |
| Ion Chromatograph | Dionex (IC5) | LC 20<br>S/N 0106180 | 2002 | 314.0 |
| Ion Chromatograph | Dionex (IC6) | ICS 2000<br>S/N 03100162/03100118 | 2003 | 300.0, 9056 9056A |
| Ion Chromatograph | Dionex (IC7) | ICS 2000<br>S/N 03100161/03100122 | 2003 | 300.0, 9056 9056A |
| Ion Chromatograph | Dionex (IC8) | ICS 2000 RFIC<br>S/N 08020954/08020762 | 2008 | 300.0, 9056 9056A |
| Ion Chromatograph | Dionex (IC9) | ICS 3000<br>S/N 08020888 | 2008 | Hydrazine, MMH, UDMH |
| TOC | LECO (LEC) | C632 (Solid)<br>S/N 3097 | 2007 | 9060, 5310B |
| TOC | Shimadzu (SHI3) | TOC-VCPN<br>S/N H51404335027 | 2005 | 415.1, 9060, 5310B |
| TOC | Shimadzu (SHI2) | TOC-VCSH<br>S/N 414445340 | 2008 | 415.1, 9060, 5310B |
| TOX | Thermo Euroglass (Thermo 3) | ECS 1200<br>S/N 993752/ 2008.283 | 2008 | 9020, 9021, 9023 |
| TOX | Thermo Scientific (Thermo 2) | ECS 1200<br>S/N 993728/ 2004.119 | 2004 | 9020, 9021, 9023 |
| UV/VIS | Alpkem (Alp1) | A002393<br>S/N 908893427/ 906850834 | 1997 | 325.2, CN, Phenol |
| UV/VIS | Alpkem (Alp2) | A002393<br>S/N 917893398/ 912850458 | 1997 | 350.1, 353.2 |
| UV/VIS | Alpkem (ALP3) | Flow Solution 3000<br>S/N 632-1010-49/60092 | 2010 | 350.1 |
| UV/VIS | Konelab | Model 20<br>S/N P0518697 | 2003 | 365.1, 420.1 |
| UV/VIS | Astoria Pacific Analyzer | Astoria 2<br>S/N 200052 | 2005 | 351.2, 353.2, 365.1, 365.1 LL |

| Instrument Type | Manufacturer (Lab ID) | Model Number/ Serial Number | Year Put into Service | Method Performed |
|---|---|---|---|---|
| Autotitrator (pH, Alkalinity, Conductance) | Man-Tech (AT2) | PC – Titrate<br>PC-1000 | 2000 | 9040, 9045, 2320B, 2510B, 9050A |
| Autotitrator (pH, Alkalinity, Conductance) | Man-Tech (AT3) | PC – Titrate<br>PC-1000 | 2011 | 9040, 9045, 2320B, 2510B, 9050A |
| pH Meter | ThermoScientific | Orion 5 Star<br>S/N: B27854 | 2012 | 9040, 9045, 4500-H B |
| pH Meter | ThermoScientific | Orion 3 Star<br>S/N: B15566 | 2009 | 2320B, 2310B |
| Conductivity Meter | YSI | YSI 3200-115V<br>S/N: 02G0765 AF | 2009 | Not in use |
| Conductivity Meter | Orion | Orion 160<br>S/N: 42536014 | 1985 | 2510B, 9050A |
| Dissolved Oxygen Meter | YSI | 5100<br>S/N 08D100984 | 2008 | Not in use |
| Dissolved Oxygen Meter | YSI | 5100<br>S/N 02G0238 | 2008 | 405.1, 5210B |
| Turbidimeter | HF Scientific (TB2) | Micro 100 | 2001 | 180.1 |
| Flashpoint | Herzog Pensky Martens | Model MP-329<br>S/N 043291648 | 2003 | 1010, 1010A |
| Spectrophotometer | HACH | DR/2010<br>S/N 990200012321 | 2007 | 410.4, 7196A, 3500 Fe D, 3500 Cr B, 3500 Cr D, 4500S-2 D, 420.1 |
| Spectrophotometer | Genysys | Genysys 20<br>SN: 3SGP171002 | 2011 | 410.4, 7196A, 3500 Fe D, 3500 Cr B, 3500 Cr D, 4500$S^{-2}$ D, 420.1 |
| GC/MS Semivolatiles | Hewlett-Packard (B) | 6890 – GC<br>S/N US00007283<br>5973 – MSD<br>S/N US70820578 | 1999 | 8270, 625 |
| GC/MS Semivolatiles | Hewlett-Packard (D) | 6890 – GC<br>S/N US00007319<br>5973 – MSD<br>S/N US70820578 | 1996 | 8270, 625 |
| GC/MS Semivolatiles | Agilent Technologies (F) | 6890 – GC<br>S/N US00036181<br>5973N – MSD<br>S/N US02480180 | 1996 | 8270 SIM |
| GC/MS Semivolatiles | Agilent Technologies (K) | 6890N – GC<br>S/N CN10332028<br>5973 – MSD<br>S/N US33266011 | 2003 | 8270, 8270 SIM, 625 |

| Instrument Type | Manufacturer (Lab ID) | Model Number/ Serial Number | Year Put into Service | Method Performed |
|---|---|---|---|---|
| GC/MS Semivolatiles | Agilent Technologies (GCMS6) | 7890A – GC<br>S/N CN10933128<br>5975C inert XL w/ triple Axis Detector<br>S/N US92033627 | 2010 | 8270 |
| GC/MS Semivolatiles | Agilent Technologies (G4) | 6890N – GC<br>S/N CN10438087<br>5973 Inert – MSD<br>S/N US43120937 | 2004 | 8270 Best Practice |
| GC/MS Semivolatiles | Agilent Technologies (X4) | 6890N – GC<br>S/N CN10438076<br>5973 inert – MSD<br>S/N US43120927 | 2004 | 8270, 625 |
| GC/MS Semivolatiles | Hewlett-Packard (Y) | 6890 – GC<br>S/N US00007291<br>5973 – MSD<br>S/N US70820572 | 1996 | 8270, 625 |
| GC/MS Semivolatiles | Agilent Technologies (G5) | 6890N – GC<br>S/N CN10605078<br>5975 – MSD<br>S/N US60532282 | 2006 | 8270, 8270 SIM, 625 |
| GC/MS Volatiles | Agilent Technologies (C)<br><br>O·I Analytical | 6890N – GC<br>S/N US00007315<br>5973 – MSD<br>S/N US70820571<br>4552 - Purge & Trap<br>S/N 14049<br>4660 Concentrator<br>S/N A344466379E | 2002 | 8260 |
| GC/MS Volatiles | Agilent Technologies (E)<br><br>O·I Analytical | 6890 – GC<br>S/N-US00029543<br>5973 – MSD<br>S/N –US93122910<br>4552 - Purge & Trap<br>S/N - 13442<br>4660 – Concentrator<br>S/N – G116466985P | 2011 | 8260 |
| GC/MS Volatiles | Hewlett-Packard (H)<br><br>O·I Analytical | 5890II – GC<br>S/N 3336A60700<br>5972 – MSD<br>S/N 3524A03013<br>4552 – Purge & Trap<br>S/N 14052<br>4660 – Concentrator<br>S/N A3444663771 | 1994 | 8260-Water |
| GC/MS Volatiles | Hewlett Packard (P)<br><br>O·I Analytical | 6890 - GC<br>S/N US00007321<br>5973 – MSD<br>S/N US70820566<br>4552 – Purge & Trap<br>S/N 14377<br>4660 - Concentrator<br>S/N C509466078P | 1997 | 8260, 624 |

| Instrument Type | Manufacturer (Lab ID) | Model Number/ Serial Number | Year Put into Service | Method Performed |
|---|---|---|---|---|
| GC/MS Volatiles | Hewlett-Packard (G)<br><br>Varian<br><br>OI Analytical | 5890 Series II - GC<br>S/N 3336A56276<br>5972 – MSD<br>S/N 3435A01850<br>Archon Purge & Trap<br>S/N 12751<br>O·I 4560 - Concentrator<br>S/N | 1996 | 8260 |
| GC/MS Volatiles | Hewlett-Packard (J)<br><br>Varian<br><br>OI Analytical | 5890II – GC S/N 3336A60701<br>5972 – MSD<br>S/N 3524A03016<br>Archon Purge & Trap<br>S/N 12726<br>O·I 4560 – Concentrator<br>S/N D308367 | 1994 | 8260 |
| GC/MS Volatiles | Agilent Technologies (R1)<br><br>O·I Analytical | 6890N - GC S/N LN10524033<br>5973 Inert – MSD<br>S/N US52420237<br>4552 – Purge & Trap<br>S/N 14043<br>4660 – Concentrator<br>S/N A344466372B | 1994 | 8260, 624 |
| GC/MS Volatiles | Hewlett-Packard (R2)<br><br>O·I Analytical | 5890II - GC<br>S/N 336A53965<br>5972 – MSD<br>S/N 3501A02273<br>4552 – Purge & Trap<br>S/N 14052<br>4660 – Concentrator<br>S/N C509466077E | 1995 | 8260, 624 |
| GC/MS Volatiles | Hewlett-Packard (Z)<br><br>O·I Analytical | 5890II – GC<br>S/N 3336A60013<br>5972 – MSD<br>S/N 352AA02693<br>Archon Purge & Trap<br>S/N C429411174<br>O·I 4660 –Concentrator<br>S/N G109466777 | 1996 | 8260 |
| GC/MS Volatiles | Agilent Technologies (GCMS1)<br><br>O·I Analytical | 6890N – GC<br>S/N CN10420009<br>5973 – MSD<br>S/N US35120257<br>4552 – Purge & Trap<br>S/N 14593<br>4660 – Concentrator<br>S/N C509466077P | 2004 | 8260, 624 |

| Instrument Type | Manufacturer (Lab ID) | Model Number/ Serial Number | Year Put into Service | Method Performed |
|---|---|---|---|---|
| GC/MS Volatiles | Agilent Technologies (G2)<br><br>Varian | 6890N – GC<br>S/N CN10421078<br>5973 – MSD<br>S/N GS36120303<br>Archon Purge & Trap<br>S/N MS0902W012<br>O·I 4660 – Concentrator<br>S/N 19374669269 | 2004 | 8260 |
| GC/MS Volatiles | Hewlett-Packard (Q)<br><br>Varian<br><br>OI Analytical | 6890 – GC<br>S/N US0000021949<br>5973 – MSD<br>S/N US72810801<br>Archon Purge & Trap<br>S/N 12750<br>O·I 4560 – Concentrator<br>S/N 308366 | 2001 | 8260 |
| GC/MS Volatiles | Agilent Technologies (GCMS7)<br><br>OI Analytical | 6890N – GC<br>S/N US10229109<br>5975B – MSD<br>S/N US60522608<br>Archon 4552<br>S/N 14212<br>Eclipse 4660<br>B428466805P | 2012 | 8260, 624 |
| GC/MS Volatiles | Hewlett-Packard (I)<br><br>Tekmar Dohrmann | 5890 – GC<br>S/N 2643A11361<br>7000 – Headspace Autosampler<br>S/N US03038002 | 2003 | Volatile Screening |
| GC/MS Volatiles | Hewlett-Packard (T)<br><br>Tekmar Dohrmann | 5890 Series II – GC<br>S/N 2750A14928<br>7000HT Headspace Autosampler<br>S/N US01198005 | 2001 | Volatile Screening |
| GC Semivolatiles | Hewlett-Packard (A) | 5890 Dual FID<br>S/N 2750A16891 | 1987 | 8015 Alcohol |
| GC Semivolatiles | Hewlett-Packard (C) | 6890 Dual ECD<br>S/N US00029514 | 1999 | 608, 8081 |
| GC Semivolatiles | Hewlett-Packard (D) | 6890 Dual NPD<br>S/N DE00020818 | 1997 | 614, 8141 |
| GC Semivolatiles | Agilent Technologies (D2) | 6890N Dual NPD<br>S/N US10521035 | 2004 | 614, 8141 |
| GC Semivolatiles | Hewlett-Packard (E) | 5890II Dual ECD<br>S/N 3121A35858 | 1992 | 504.1, 8011 |
| GC Semivolatiles | Hewlett-Packard (M) | 6890 Dual ECD<br>S/N US00024143 | 1999 | 615, 8151 |
| GC Semivolatiles | Agilent Technologies (P1) | 6890N Dual ECD<br>S/N US10418019 | 2004 | 608, 8081 |
| GC Semivolatiles | Agilent Technologies (P2) | 6890N Dual ECD<br>S/N US10418024 | 2004 | 608, 8081 |
| GC Semivolatiles | Agilent Technologies (P3) | 6890N Dual ECD<br>S/N US10418023 | 2004 | 608, 8082 |
| GC Semivolatiles | Hewlett-Packard (R) | 5890II Dual ECD<br>S/N 3336A55030 | 1994 | Not in use |

| Instrument Type | Manufacturer (Lab ID) | Model Number/ Serial Number | Year Put into Service | Method Performed |
|---|---|---|---|---|
| GC Semivolatiles | Hewlett-Packard (U) | 5890II Single FID<br>S/N US00063217 | 1999 | 8015 DRO |
| GC Semivolatiles | Agilent (U2) | 7890A Dual FID<br>S/N CN10942072 | 11/11/09 | 8015 DRO |
| GC Semivolatiles | Hewlett-Packard (V) | 5890 Dual ECD<br>S/N 2631A08686 | 1990 | 615, 8151 |
| GC Semivolatiles | Hewlett-Packard (W) | 5890II Dual ECD<br>S/N 3126A36250 | 1990 | 608, 8082 |
| GC Semivolatiles | Hewlett-Packard (Z2) | 5890II Dual FID<br>S/N 3336A51924 | 1990 | Glycols |
| GC Volatiles | Hewlett-Packard (B)<br><br>Tekmar | 5890 Series II Dual PID/FID<br>S/N 3019A28634<br>LSC 2000 Concentrator<br>S/N 90142014<br>ALS 2016 Purge & Trap<br>S/N 89108007 | 1990 | 8021 GRO |
| GC Volatiles | Hewlett-Packard (J)<br><br>Tekmar Dohrmann | 6890 Dual FID<br>S/N US00026194<br>HS Autosampler 7000 HT<br>S/N US02296004 | 1997 | RSK-175 |
| GC Volatiles | Hewlett-Packard (K)<br><br>Tekmar | 5890A Dual PID Single FID<br>S/N 2843A19497<br>LSC 2000 Concentrator<br>S/N 92098003<br>ALS 2016 Purge & Trap<br>S/N 92101007 | 1988 | 8015, 8021 Aromatics, 8021 GRO |
| GC Volatiles | Hewlett-Packard (L)<br><br>Tekmar | 5890A FID<br>S/N 2336A00164<br>LSC 2000 Concentrator<br>S/N 89283001<br>ALS 2016 Purge & Trap<br>S/N 90121028<br>ALS 2032 Purge & Trap<br>S/N 94300004 | 1988 | 8015 GRO |
| GC Volatiles | Hewlett-Packard (P)<br><br>Tekmar | 5890A Dual PID Single FID<br>S/N 2518A05337<br>LSC 2000 Concentrator<br>S/N 89310005<br>ALS 2016 Purge & Trap<br>S/N 90100036 | 1990 | 8021 |
| GC Volatiles | Agilent Technologies (S-1)<br>O I Analytical | 6890 Dual PID/ Dual ELCD<br>S/N US10341120<br>4552 – Purge & Trap<br>S/N 14046<br>4660 – Concentrator<br>S/N 343466333P | 2003 | 8021 |
| GC Volatiles | Hewlett-Packard (Y)<br><br>Tekmar | 5890A PID/FID<br>S/N 2843A19484<br>LSC 3000 Concentrator<br>S/N 93132006<br>ALS 2016 Purge & Trap<br>S/N 91112002<br>ALS 2032 Purge & Trap<br>S/N 88145006 | 1988 | Screening |

| Instrument Type | Manufacturer (Lab ID) | Model Number/ Serial Number | Year Put into Service | Method Performed |
|---|---|---|---|---|
| GC Volatiles | Hewlett-Packard (H)<br><br>Tekmar | 5890A Dual PID Single FID<br>S/N 2750A16573<br>LSC 2000 Concentrator<br>S/N 90100002<br>ALS 2016 Purge & Trap<br>S/N 88145007 | 1988 | 8015, 8021 Aromatics, 8021 GRO |
| GC Volatiles | Agilent (Q)<br><br>OI Corporation | 7890A Dual PID Dual FID<br>S/N CN12161119<br>4660 Concentrator<br>S/N H216466450P<br>4552 Autosampler<br>S/N US12090001 | 2012 | 8015 GRO AK 101 |
| HPLC | Hewlett-Packard (G) | Multiple wavelength UV Detector<br>G1365A<br>S/N DE91600240<br>Fluorescence detector G1321A<br>S/N DE92001251<br>Quarternary Pump<br>G1311A<br>S/N DE91606289 | 1999 | 8310 |
| HPLC | Agilent Technologies (G2) | UV Diode Array Detector<br>G1315B<br>S/N DE11112694<br>Fluorescence detector<br>G1321A<br>S/N DE40506039<br>Binary Pump<br>G1312A<br>S/N US83105106 | 2011 | 8310, 8330 |
| HPLC | Agilent Technologies (Q) | UV Multiple wavelength detector<br>1365B<br>S/N DE11101025<br>Quarternary Pump<br>G1311A<br>S/N DE11114412 | 2001 | 8310 |
| HPLC | Agilent Technologies (X3) | UV Diode Array Detector<br>G1315B<br>S/N DE23917239<br>Fluorescence detector<br>G1321A<br>S/N DE33205520<br>Quarternary Pump<br>G1311A<br>S/N DE33224364 | 2004 | 8330 |
| HPLC | Agilent Technologies (X4) | UV Multiple wavelength detector<br>1365B<br>S/N DE22601691<br>Quarternary Pump<br>G1311A<br>S/N DE14918799 | 2010 | 8330 |

| Instrument Type | Manufacturer (Lab ID) | Model Number/ Serial Number | Year Put into Service | Method Performed |
|---|---|---|---|---|
| IC/MS/MS | Waters (LCMS1) | Quattro Ultima MS/MS<br>S/N VB118<br>Shimadzu HPLC Pumps (2)<br>LCIDAD UP<br>S/N C20963952100 US<br>S/N C20963952101 US<br>Dionex Injector (IC)<br>AXP-MS<br>S/N 02080163<br>Conductivity Detector CD25A<br>S/N 02010062 | 2000 | 8321, 6860 |
| HPLC/MS/MS or IC/MS/MS | Waters (LCMS2) | Quattro Ultima MS/MS<br>S/N VB304<br>Waters HPLC<br>2790<br>S/N D00SM9378M<br>Dionex Ion Chromatography (IC) System<br>ICS-2000<br>S/N 07070021 | 2001 | 8321, 6860, 6850 |
| HPLC/MS/MS | Waters (LCMS3) | Quattro Premier XE MS/MS<br>S/N VAB661<br>Waters Sample Manager<br>Acquity<br>S/N M04UPS473M<br>Waters Binary Solvent Manager<br>Acquity<br>S/N M04UPB504M | 2005 | 8321 |
| HPLC/MS/MS | Waters (LCMS4) | Quattro Micromass MS/MS<br>S/N QAA632<br>HPLC Inlet<br>Acquity<br>S/N K035M4028M<br>Waters Ion Sabre Control Unit<br>Ion Sabre<br>S/N 29005 | 2006 | 8321 |
| HPLC/MS/MS | Agilent Technologies (LCMS5) | G6460A MS/MS<br>S/N US95270371<br>Agilent Binary Pump G1312B<br>S/N DE63061753 | 2010 | 8321 |
| CI/MS/MS | Varian (CIMS1) | 1200L MS/MS<br>S/N 1200L-680<br>CP-3800 GC<br>10828 | 2004 | Low Level NDMA (1625) |

| Support Equipment | | | | |
|---|---|---|---|---|
| **Instrument Type** | **Manufacturer** | **Model** | **Quantity** | **Location** |
| Centrifuge | Sorvall Legend T | Sorvall Legend T | 1 | Metals |
| Hot Block | Environmental Express | SC100<br>SC151<br>SC154 | 11<br>2<br>2 | Metals |
| Sonic Bath | Bransonic | Bransonic | 1 | Metals |
| Autoclave | Tuttnaver | 2340M | 1 | Wet Chemistry |
| Centrifuge | Beckman | Beckman G- D-G | 1 | Wet Chemistry |
| COD Digestor | HACH | DRB 200 | 2 | Wet Chemistry |
| Cool Flow 25 NES Lab Kontes w/Midi Vap 2000 | Scientific Glassware Instruments | Scientific Glassware Instruments | 1 | Wet Chemistry |
| Cyanide Digestor | Westco Scientific Instruments, Inc. | Westco Scientific Instruments, Inc. | 1 | Wet Chemistry |
| Digestion System w/ Controller | A I Scientific | AIM 500/AIM 600 | 2 | Wet Chemistry |
| Incubator | Fisher Scientific | Incubator | 1 | Wet Chemistry |
| Incubator | Precision Scientific | Spore Strip Incubator | 1 | Wet Chemistry |
| Incubator | Fisher Scientific | Low Temperature Incubator | 1 | Wet Chemistry |
| Incubator | Thermo Electron Corporation | Thermo Electron Corporation | 1 | Wet Chemistry |
| Magnifier | Darkfield Quebec | Colony Counter | 1 | Wet Chemistry |
| Oil & grease Machine w/ SPE-DEX 3000 Controller/ Speed VAP II 9000 Solvent Evaporation System VAC Generator | Horizon Technology | 3000 XL | 1 | Wet Chemistry |
| Oven (A) | Yamato | Mechanical Convection Oven DKN 810 | 1 | Wet Chemistry |
| Oven (B) | VWR | 1370 FM | 1 | Wet Chemistry |
| Oven (C) | VWR | 1370 G | 1 | Wet Chemistry |
| Oven (D) | VWR | 1370 GD | 1 | Wet Chemistry |
| Oven (E) | Fisher Scientific | Fisher Scientific | 1 | Wet Chemistry |
| Solvent Evaporator w/Digital Temperature Control System | UA-SYS | UA-SYS Heating System S-EVAP KD | 1 | Wet Chemistry |
| TOX Sample Preparation | Microcoulometric Titration System | Microcoulometric Titration System | 5 | Wet Chemistry |
| Water Bath | Fisher Scientific | Isotemp 2150 | 1 | Wet Chemistry |
| Water Purifier | ELGA | Pure Lab Ultra | 3 | Wet Chemistry/ Bottle Prep |

| Support Equipment | | | | |
|---|---|---|---|---|
| **Instrument Type** | **Manufacturer** | **Model** | **Quantity** | **Location** |
| Centrifuge | IEC Clinical | IEC Clinical | 1 | Mass Spectrometry |
| Centrifuge | Beckman-Coulter | Allegra X-22 | 1 | Explosives Prep |
| Grinder | Humboldt | H-4199 | 2 | Explosives Prep |
| Grinder | Cutler-Hammer | Ring in Puck | 1 | Explosives Prep |
| Grinder | US Stoneware | Ball mill | 1 | Explosives Prep |
| Shaker | New Brunswick Scientific | Innova 2100 | 1 | Explosives Prep |
| Sonicator Bath | Branson | 5510 | 2 | Explosives Prep |
| Centrifuge | International Equipment Company | Model K | 1 | North Prep |
| Centrifuge | International Equipment Company | UV | 1 | North Prep |
| Drying Oven | Blue M | Temp-O-Loy Amecling Oven | 1 | North Prep |
| Microwave Extraction | CEM Corporation | MARSXpress Xtraction | 1 | North Prep |
| N-Evap | Organomation Associates, Inc. | N-Evap II Nitrogen Evaporator | 2 | North Prep |
| Oven | Fisher Scientific | Isotemp Muffle Furnace | 1 | North Prep |
| Sonicator | Fisher Scientific | 550 Sonic Dismembrator | 3 | North Prep |
| Sonicator | Heat Systems | Sonicator Ultrasonic Processor XΔ | 1 | North Prep |
| Sonicator | Misonix | Sonicator 3000 | 2 | North Prep |
| Sonicator | Heat Systems | W-385 | 3 | North Prep |
| Turbo Vap | Caliper Life Science | Turbo Vap II | 2 | North Prep |
| Turbo Vap | Zymark | Turbo Vap II | 1 | North Prep |
| Water Bath | Waterlow | Waterlow | 2 | North Prep |
| Water Bath | Waterlow | Waterlow | 2 | North Prep |
| Separatory Funnel Rotators | Ap & R Machine Tool | Ap & R Machine Tool | 5 | North Prep South Prep |
| Water Purifier | ELGA | Pure lab Classic | 2 | North Prep South Prep |
| Drying Oven | Despatch | VRE2-2S-1E | 1 | South Prep |
| Hotblock | CPI | Modblock | 1 | South Prep |
| Incubated Shaker Table | Lab Line Industries, Inc. | 3527 | 1 | South Prep |
| Muffle Furnance | Lindberg | Lindberg | 1 | South Prep |
| N-Evap | Organomation Associates, Inc. | N-Evap II Nitrogen Evaporator | 1 | South Prep |
| Oven | VWR | 1320 | 1 | South Prep |
| Vacuum Manifold | Waters | Vacuum Manifold | 2 | South Prep |

| Support Equipment | | | | |
|---|---|---|---|---|
| **Instrument Type** | **Manufacturer** | **Model** | **Quantity** | **Location** |
| Centrifuge | International Equipment Company | Model K | 1 | TCLP |
| Oven | Labline | L-C Oven | 1 | TCLP |
| Oven | Fischer Scientific | Isotemp | 1 | TCLP |
| Oven | VWR | 1310 | 1 | TCLP |
| Rotary Agitation Apparatus | Associated Manufacturing | | 3 | TCLP Prep |
| Oven | Precision | | 1 | GC VOA |
| Balance | Denver Instruments | Model: TP1502 S/N:24750526 | 1 | GC SVOA Hood #31 |
| Balance | Denver Instruments | Model: TP 1502 S/N: 24750525 | 1 | GC SVOA Hood #32 |
| Balance | Mettler | Model: AE 160 S/N: C33519 | 1 | Metals - ICPMS |
| Balance | Mettler | Model: PM4000 S/N: M28318 | 1 | Metals Prep |
| Balance | Denver Instruments | Model: TP 3102 S/N: 24750837 | 1 | Hg Prep Room |
| Balance | Mettler | Model: AE 260 S/N: H52017 | 1 | MS VOA Standards Prep Room |
| Balance | Denver Instruments | Model: TP 3102 S/N: 24950431 | 1 | TCLP room |
| Balance | Denver Instruments | Model: TP 323 S/N: 24850252 | 1 | MS VOA Hood #36 |
| Balance | Denver Instruments | Model: TP 323 S/N: 24650437 | 1 | MS VOA Hood #37 |
| Balance | Mettler | Model: AE 240 S/N: I23294 | 1 | Stnds & Aliquotting Hood #58 |
| Balance | Denver Instruments | Model: TP 3102 S/N: 24750836 | 1 | North Prep - MIS room |
| Balance | Denver Instruments | Model: TP 6101 S/N: 24750402 | 1 | North Prep |
| Balance | Denver Instruments | Model: TP 6101 S/N: 24750396 | 1 | North Prep |
| Balance | Denver Instruments | Model: TP 214 S/N: 24450835 | 1 | North Prep |
| Balance | Denver Instruments | Model: TP 6101 S/N: 24350888 | 1 | North Prep |
| Balance | Denver Instruments | Model: TP 214 S/N: 24850570 | 1 | Wet Chem |
| Balance | Denver Instruments | Model: TP 6101 S/N: 24750399 | 1 | Wet Chem |

| Support Equipment | | | | |
|---|---|---|---|---|
| **Instrument Type** | **Manufacturer** | **Model** | **Quantity** | **Location** |
| Balance | Denver Instruments | Model: TP 6101<br>S/N: 24950441 | 1 | Wet Chem |
| Balance | Denver Instruments | Model: TP 1502<br>S/N: 24650239 | 1 | Wet Chem |
| Balance | Denver Instruments | Model: TP 3102<br>S/N: 24950432 | 1 | Wet Chem |
| Balance | Mettler | Model: AE 163<br>S/N: D91301 | 1 | Wet Chem<br>/South Prep |
| Balance | Mettler | Model: PM 4600<br>S/N: H31422 | 1 | Wet Chem |
| Balance | Sartorius | Model: CP124S<br>S/N: 19350788 | 1 | Wet Chem Soil<br>TOC |
| Balance | Denver Instruments | Model: TP 214<br>S/N: P214088008 | 1 | South Prep |

**Table 20-2. Example: Schedule of Routine Maintenance**

| Instrument | Procedure | Frequency |
|---|---|---|
| Cetac Mercury Analyzers | • Change Lamp<br>• Clean cell and GLS as needed<br>• Check pump tubing and pump flow<br>• Check Waste Container<br>• Fill reductant bottle with 10% Stannous Chloride and check acid reagent | As needed<br>As needed<br>Daily<br>Daily<br>Daily |
| ICP | • Check pump tubing<br>• Check fluid level in waste container<br>• Clean or replace air filters<br>• Check torch for residue<br>• Check nebulizer flow<br>• Clean nebulizer and drain chamber<br>• Fill rinse solution/ IS solution<br>• Replace capillary tubing/sipper probe<br>• Change internal cooling fluid | Daily<br>Daily<br>As needed<br>Daily<br>Daily<br>Daily<br>Daily<br>As needed<br>Quarterly |
| ICP MS | • Change pump tubing<br>• Check level of tuning solution<br>• Check waste container<br>• Load printer with paper<br>• Check air filters<br>• Replace coolant on chiller<br>• Clean or change nebulizer<br>• Clean or replace torch<br>• Replace sample tubing<br>• Change oil in vacuum pumps<br>• Remove and clean cones | Daily<br>Daily<br>Daily<br>Daily<br>As needed<br>As needed<br>As needed<br>As needed<br>As needed<br>As needed<br>As needed |
| UV-Vis Spectrophotometer | • Clean ambient flow cell<br>• Precision check/alignment of flow cell<br>• Wavelength verification check | As required<br>As required<br>Semi-annually |
| Colorimetric Analyzer | • Clean detector<br>• Clean filters<br>• Check tubing<br>• Clean sample probe shaft<br>• Clean pump, diluter, and XYZ sampler.<br>• Lubricate pump roller | Daily<br>Daily<br>Daily<br>Daily<br>Monthly<br>Semi-annually |

| Instrument | Procedure | Frequency |
|---|---|---|
| Ion Chromatograph | • Check plumbing for leaks<br>• Check gases<br>• Check pump pressure<br>• Check eluent level<br>• Check conductivity meter<br>• De-gas pump head when flow is erratic<br>• Change analytical columns and bed supports guard<br>• Check and replace any damaged/discolored tubing | Daily<br>Daily<br>Daily<br>Daily<br>Daily<br>As needed<br>As needed<br>As needed<br>As needed<br>As needed |
| Total Organic Halide Analyzer | • Check electrodes/polish if needed<br>• Replace dehydrating fluid /electrolyte fluid<br>• Clean quartz boat<br>• Perform cell performance check<br>• At the end of each day of use, wash out the absorption module, empty the electrolyte and fill chamber with DI water, empty dehydrator tube<br>• Clean or replace pyrolysis tube<br>• Clean titration cell<br>• Replace reference electrode fluid<br>• Change quartz wool<br>• Replace o-rings and seals | Daily<br>Daily<br>Daily<br>Daily<br>Daily<br>As needed<br>As needed<br>As needed<br>As needed<br>As needed |
| Hewlett Packard GC/MS | • Check Septa and clean injection port<br>• Check carrier gas supply<br>• Check tune parameters<br>• Check oil levels in mechanical pumps and the diffusion pump if the vacuum is insufficient<br>• Replace electron multiplier<br>• Clean Source<br>• Replace filaments<br>• Change rough pump oil and exhaust filters<br>• Relubricate the turbomolecular pump-bearing wick | Daily<br>Daily<br>Daily<br>As needed<br>As needed<br>As needed<br>As needed<br>Annually<br>Annually |
| Gas Chromatograph | • Check carrier gas supply<br>• Check temperatures of inlet, detectors, verify temperature program<br>• Check septa clean injection port or replace injection port liner and cut column if needed<br>• Reactivate carrier gas drying agents<br>• Replace or repair flow controllers if constant flow cannot be maintained | Daily<br>Daily<br>As needed<br>As needed<br>As needed |

| Instrument | Procedure | Frequency |
|---|---|---|
| Electron Capture Detector (ECD) | • Detector wipe test (Ni-63)<br>• Detector cleaning | Semi-annually<br>As needed |
| Flame Ionization Detector (FID) | • Detector cleaning | As needed |
| Nitrogen Phosphorus Detector (NPD) | • Replace bead<br>• Replace ceramic rings | As needed<br>As needed |
| Photoionization Detector (PID) | • Change O-rings<br>• Clean lamp window | As needed<br>As needed |
| HPLC | • Check level of eluent vessels<br>• Change pump seals<br>• Change the column frit<br>• Change fuses in power supply<br>• Filter all samples<br>• Change autosampler rotor or oil autosampler slides<br>• Change or backflush columns<br>• Replace needle<br>• Replace needle seat assembly<br>• Replace Active Inlet Valve (AIV) cartridge<br>• Replace lamps | Daily<br>As needed<br>As needed<br>As needed<br>Daily<br>As needed<br>As needed<br>As needed<br>As needed<br>As needed<br>As needed |
| APCI/ESI LC/MS/MS | • Check solvent reservoirs<br>• Verify that pump is primed and operating pulse free<br>• Verify temperatures for capillary heater/vaporizer heater<br>• Verify pressure of manifold/fore-pump<br>• Verify that corona and multiplier are functional<br>• Clean Lenses<br>• Clean skimmer<br>• Replace column<br>• Oil autosampler<br>• Change autosampler filters<br>• Replace sample inlet tube<br>• Replace fused silica tubing at ESI interface<br>• Replace rough pump oil<br>• Replace turbo pump oil<br>• Vacuum system components including fans and fan covers | Daily<br>Daily<br>Daily<br>Daily<br>Daily<br>As needed<br>As needed<br>As needed<br>As needed<br>As needed<br>As needed<br>As needed<br>Annually<br>Annually<br>Annually |
| Balances | • Class “S” traceable weight check<br>• Clean pan and check if level<br>• Field service | Daily, when used<br>Daily<br>At least Annually |
| Sonicator | • Inspect probe for etching/pitting<br>• Tune sonicator assembly<br>• Disassemble and clean probe tips | Daily<br>Weekly<br>As needed |

| Instrument | Procedure | Frequency |
|---|---|---|
| Conductivity Meter | • Standardize with KCL<br>• Conductivity cell cleaning<br>• Check probes and cables | Daily<br>As needed<br>As needed |
| Flash Point Tester | • Check stirrer<br>• Check tubing<br>• Check gas supply<br>• Check thermometer against NIST thermometer | Daily<br>Daily<br>Daily<br>Quarterly by QA |
| Digestion Block | • Check with NIST thermometer | Annually |
| Turbidimeter | • Check light bulb<br>• Inspect cells<br>• Clean housing | Daily, when used<br>Monthly<br>Monthly |
| Deionized/Distilled Water | • Conductivity check<br>• System cleaning<br>• Replace cartridge & large mixed bed resins | Daily<br>As needed<br>As needed |
| Drying Ovens | • Temperature monitoring<br>• Temperature adjustments | Daily<br>As required |
| Refrigerators/ Freezers | • Temperature monitoring<br>• Temperature adjustment<br>• Defrosting/cleaning | Daily<br>As required<br>As required |
| pH/Specific Ion Meter | • Calibration/check slope<br>• Clean electrode | Daily<br>As required |
| BOD Incubator | • Temperature monitoring | Daily |
| Water baths | • Temperature monitoring<br>• Water replaced | Daily<br>Monthly or as needed |

## SECTION 21. MEASUREMENT TRACEABILITY

### 21.1 Overview

Traceability of measurements shall be assured using a system of documentation, calibration, and analysis of reference standards. Laboratory equipment that are peripheral to analysis and whose calibration is not necessarily documented in a test method analysis or by analysis of a reference standard shall be subject to ongoing certifications of accuracy. At a minimum, these must include procedures for checking specifications of ancillary equipment: balances, thermometers, temperature, Deionized (DI) and Reverse Osmosis (RO) water systems, automatic pipettes and other volumetric measuring devices. (Refer to Section 20.3). With the exception of Class A Glassware and Glass microliter syringes, quarterly accuracy checks are performed for all mechanical volumetric devices. Wherever possible, subsidiary or peripheral equipment is checked against standard equipment or standards that are traceable to national or international standards. Class A Glassware and Glass microliter syringes should be routinely inspected for chips, acid etching or deformity (e.g., bent needle). If the Class A glassware or syringe is suspect, the accuracy of the glassware will be assessed prior to use.

### 21.2 NIST-Traceable Weights and Thermometers

Reference standards of measurement shall be used for calibration only and for no other purpose, unless it can be shown that their performance as reference standards would not be invalidated.

For NIST-traceable weights and thermometers, the laboratory requires that all calibrations be conducted by a calibration laboratory accredited by A2LA, NVLAP (National Voluntary Laboratory Accreditation Program), APLAC (Asia-Pacific Laboratory Accreditation Cooperation), or EA (European Cooperation for Accreditation). A certificate and scope of accreditation is kept on file at the laboratory.

Calibration laboratory's policy for achieving measurement traceability is defined and includes the subsequent elements of uncertainty.

The uncertainty calculations of the calibration laboratory are supported by uncertainty budgets and are represented by expanded uncertainties typically using a coverage factor of k=2 to approximate the 95% confidence level. This explanation accompanies the measurement result and the associated uncertainty.

The tolerance uncertainty ratio (TUR) is calculated using the expanded uncertainty of the measurement, not the collective uncertainty of the measurement standards. A statement to this effect accompanies the TUR along with the coverage factor and confidence level.

The calibration report or certificate submitted to TestAmerica Denver contains, in a well designed format, a traceability statement, the conditions under which the calibrations were made in the context of any potential influence, a compliance statement with an identified metrological specification and the pertinent clauses, a clearly identified record of the quantities and functional test results before and after re-calibration, and no recommendation on the calibration interval. Opinions and interpretations of results are presented along with the basis

upon which they were made and identified as such. The report may be submitted by facsimile or other electronic means as long as the requirements of the International Standard are achieved. If significant amendments are made to a calibration certificate, a supplemental certificate for the serial-number-specified piece of equipment is so identified. When a new certificate is offered, it uniquely identifies and references the one it replaces. All calibration reports are filed in the QA Office.

The calibration laboratory supports in-house calibration systems: documented procedures for in-house calibrations, evidence by a report, certificate, or sticker, for an appropriate amount of time; training records of calibration personnel; certificates from accreditation services demonstrating traceability to national or international standards of measurement; procedures for evaluating measurement uncertainty; timely and documented recalibration of reference standards. When subcontracting to a calibration laboratory, TestAmerica Denver does not use a firm who subcontracts the work.

An external certified service engineer services laboratory balances on an annual basis. This service is documented on each balance with a signed and dated certification sticker. Balance calibrations are checked each day of use. All mercury thermometers are calibrated annually against a traceable reference thermometer. Temperature readings of ovens, refrigerators, and incubators are checked on each day of use.

### 21.3 Reference Standards / Materials

Reference standards/materials, where commercially available, are traceable to certified reference materials. Commercially prepared standard materials are purchased from vendors accredited by A2LA, NVLAP, APLAC (Asia-Pacific Laboratory Accreditation Cooperation), or EA (European Cooperation for Accreditation) with an accompanying Certificate of Analysis that documents the standard purity. If a standard cannot be purchased from a vendor that supplies a Certificate of Analysis, the purity of the standard is documented by analysis. The receipt of all reference standards must be documented. Reference standards are labeled with a unique Standard Identification Number and expiration date. All documentation received with the reference standard is retained as a QC record and references the Standard Identification Number.

All reference, primary and working standards/materials, whether commercially purchased or laboratory prepared, must be checked regularly to ensure that the variability of the standard or material from the ‘true’ value does not exceed method requirements. The accuracy of calibration standards is checked by comparison with a standard from a second source. In cases where a second standard manufacturer is not available, a vendor certified different lot is acceptable for use as a second source. For unique situations, such as Disodium Iminodiacetate (IDA) analysis where no other source or lot is available, a standard made by a different analyst would be considered a second source. The appropriate Quality Control (QC) criteria for specific standards are defined in laboratory SOPs. In most cases, the analysis of an Initial Calibration Verification (ICV) or LCS (where there is no sample preparation) is used as the second source confirmation. These checks are generally performed as an integral part of the analysis method (e.g. calibration checks, laboratory control samples).

All standards and materials must be stored and handled according to method or manufacturer's requirements in order to prevent contamination or deterioration. Refer to the Corporate Environmental Health & Safety Manual or laboratory SOPs. For safety requirements, please refer to method SOPs and the laboratory Environmental Health and Safety Manual.

Standards and reference materials shall not be used after their expiration dates unless their reliability is verified by the laboratory and their use is approved by the Quality Assurance Manager. The laboratory must have documented contingency procedures for re-verifying expired standards.

## 21.4 Documentation and Labeling of Standards, Reagents, and Reference Materials

Reagents must be at a minimum the purity required in the test method. The date of reagent receipt and the expiration date are documented. The lots for most of the common solvents and acids are tested for acceptability prior to company wide purchase. [Refer to TestAmerica's Corporate SOP (CA-Q-S-001), *Solvent and Acid Lot Testing and Approval*.]

All manufacturer or vendor supplied Certificates of Analysis or Purity must be retained, stored appropriately, and readily available for use and inspection. These records are maintained in the analytical groups and by QA on the public drive. Records must be kept of the date of receipt and date of expiration of standards, reagents and reference materials. In addition, records of preparation of laboratory standards, reagents, and reference materials must be retained, stored appropriately, and be readily available for use and inspection. For detailed information on documentation and labeling, please refer to Denver SOP DV-QA-0015, *Verification and Storage of Calibration Standards.*

Commercial materials purchased for preparation of calibration solutions, spike solutions, etc., are usually accompanied with an assay certificate or the purity is noted on the label. If the assay purity is 96% or better, the weight provided by the vendor may be used without correction. If the assay purity is less than 96% a correction will be made to concentrations applied to solutions prepared from the stock commercial material.

**21.4.1** All standards, reagents, and reference materials must be labeled in an unambiguous manner. Standards are logged into the laboratory's LIMS system, and are assigned a unique identification number. The following information is typically recorded in the electronic database within the LIMS.

- Standard ID
- Description of Standard
- Department
- Preparer's name
- Final volume and number of vials prepared
- Solvent type and lot number
- Preparation Date
- Expiration Date

- Standard source type (stock or daughter)
- Standard type (spike, surrogate, other)
- Parent standard ID (if applicable)
- Parent Standard Analyte Concentration (if applicable)
- Parent Standard Amount used (if applicable)
- Component Analytes
- Final concentration of each analyte
- Comment box (text field)

Records are maintained electronically for standard and reference material preparation. These records show the traceability to purchased stocks or neat compounds. These records also include method of preparation, date of preparation, expiration date and preparer's name or initials. Preparation procedures are provided in the Method SOPs.

**21.4.2** All standards, reagents, and reference materials must be clearly labeled with a minimum of the following information:

- Expiration Date (include prep date for reagents)
- Standard ID
- Special Health/Safety warnings if applicable

**Note**: Reagents that are not prepared and used directly from the vendor bottle only need to have a lot number, open date and expiration date.

Records must be maintained of the date of receipt for commercially purchased items or date of preparation for laboratory prepared items. Special Health/Safety warnings must also be available to the analyst. This information is maintained in the LIMS and TestAmerica Intranet Oasis.

**21.4.3** In addition, the following information may be helpful:

- Date of receipt for commercially purchased items or date of preparation for laboratory prepared items
- Date opened (for multi-use containers, if applicable)
- Description of standard (if different from manufacturer's label or if standard was prepared in the laboratory)
- Recommended Storage Conditions
- Concentration (if applicable)
- Initials of analyst preparing standard or opening container

All containers of prepared reagents must include an expiration date and an ID number to trace back to preparation.

Standard ID numbers must be traceable through associated logbooks, worksheets and raw data.

All reagents and standards must be stored in accordance to the following priority: 1) with the manufacturer's recommendations; 2) with requirements in the specific analytical methods as specified in the laboratory SOP.

## SECTION 22. SAMPLING

### 22.1 Overview

The laboratory does not provide sampling services. The laboratory's responsibility in the sample collection process lies in supplying the sampler with the necessary coolers, reagent water, sample containers, preservatives, sample labels, custody seals, COC forms, ice, and packing materials required to properly preserve, pack, and ship samples to the laboratory

### 22.2 Sampling Containers

The laboratory offers clean sampling containers for use by clients. These containers are obtained from reputable container manufacturers and meet EPA specifications as required. Any certificates of cleanliness that are provided by the supplier are maintained at the laboratory.

#### 22.2.1 Preservatives

Upon request, preservatives are provided to the client in pre-cleaned sampling containers. In some cases containers may be purchased pre-preserved from the container supplier. Whether prepared by the laboratory or bought pre-preserved, the grades of the preservatives are at a minimum:

- Hydrochloric Acid – Reagent ACS (Certified VOA Free) or equivalent
- Methanol – Purge and Trap grade
- Nitric Acid – Instra-Analyzed or equivalent
- Sodium Bisulfate – ACS Grade or equivalent
- Sodium Hydroxide – Instra-Analyzed or equivalent
- Sulfuric Acid – Instra-Analyzed or equivalent
- Sodium Thiosulfate – ACS Grade or equivalent

### 22.3 Definition of Holding Time

The date and time of sampling documented on the COC form establishes the day and time zero. As a general rule, when the maximum allowable holding time is expressed in "days" (e.g., 14 days, 28 days), the holding time is based on calendar day measured. Holding times expressed in "hours" (e.g., 6 hours, 24 hours, etc.) are measured from date and time zero. The first day of

holding time ends twenty-four hours after sampling. Holding times for analysis include any necessary reanalysis. However, there are some programs that determine holding time compliance based on the date and specific time of analysis compared to the time of sampling regardless of how long the holding time is.

### 22.4 Sampling Containers, Preservation Requirements, Holding Times

The preservation and holding time criteria specified in the laboratory SOPs are derived from the source documents for the methods. If method required holding times or preservation requirements are not met, the reports will be qualified using a flag, footnote or case narrative. As soon as possible or "ASAP" is an EPA designation for tests for which rapid analysis is advised, but for which neither EPA nor the laboratory have a basis for a holding time.

### 22.5 Sample Aliquots / Subsampling

Taking a representative sub-sample from a container is necessary to ensure that the analytical results are representative of the sample collected in the field. The size of the sample container, the quantity of sample fitted within the container, and the homogeneity of the sample need consideration when sub-sampling for sample preparation. It is the laboratory's responsibility to take a representative subsample or aliquot of the sample provided for analysis.

Analysts should handle each sample as if it is potentially dangerous. At a minimum, safety glasses, gloves, and lab coats must be worn when preparing aliquots for analysis.

Guidelines on taking sample aliquots & subsampling are located in SOP # DV-QA-0023, *Subsampling.*

## SECTION 23. HANDLING OF SAMPLES

Sample management procedures at the laboratory ensure that sample integrity and custody are maintained and documented from sampling/receipt through disposal.

### 23.1 Chain of Custody (COC)

The COC form is the written documented history of any sample and is initiated when bottles are sent to the field, or at the time of sampling. This form is completed by the sampling personnel and accompanies the samples to the laboratory where it is received and stored under the laboratory's custody. The purpose of the COC form is to provide a legal written record of the handling of samples from the time of collection until they are received at the laboratory. It also serves as the primary written request for analyses from the client to the laboratory. The COC form acts as a purchase order for analytical services when no other contractual agreement is in effect. An example of a COC form may be found in Figure 23-1.

#### 23.1.1 Field Documentation

The information the sampler needs to provide at the time of sampling on the container label is:

- Sample identification
- Date and time
- Preservative

During the sampling process, the COC form is completed and must be legible (see Figure 23-1). This form includes information such as:

- Client name, address, phone number and fax number (if available)
- Project name and/or number
- The sample identification
- Date, time and location of sampling
- Sample collectors name
- The matrix description
- The container description
- The total number of each type of container
- Preservatives used
- Analysis requested
- Requested turnaround time (TAT)
- Any special instructions
- Purchase Order number or billing information (e.g. quote number) if available
- The date and time that each person received or relinquished the sample(s), including their signed name.

When the sampling personnel deliver the samples directly to TestAmerica personnel, the samples are stored in a cooler with ice, as applicable, and remain solely in the possession of the client's field technician until the samples are delivered to the laboratory personnel. The sample collector must assure that each container is in his/her physical possession or in his/her view at all times, or stored in such a place and manner to preclude tampering. The field technician relinquishes the samples in writing on the COC form to the sample control personnel at the laboratory or to a TestAmerica courier. When sampling personnel deliver the samples through a common carrier (Fed-Ex, UPS), the COC relinquished date/time is completed by the field personnel and samples are released to the carrier. Samples are only considered to be received by lab when personnel at the fixed laboratory facility have physical contact with the samples.

**Note:** Independent couriers are not required to sign the COC form. The COC is usually kept in the sealed sample cooler. The receipt from the courier is stored in log-in by date; it lists all receipts each date.

### 23.1.2 Legal / Evidentiary Chain-of-Custody

All samples are tracked through the LIMS software program to ensure internal chain of custody and cradle to grave tracking of each sample container. If samples are identified for

legal/evidentiary purposes on the COC an internal COC can be generated from the LIMS and included in the data package.

## 23.2 Sample Receipt

Samples are received at the laboratory by designated sample receiving personnel and a unique laboratory project identification number is assigned. Each sample container shall be assigned a unique sample identification number that is cross-referenced to the client identification number such that traceability of test samples is unambiguous and documented. Each sample container is affixed with a durable sample identification label. Sample acceptance, receipt, tracking and storage procedures are summarized in the following sections.

### 23.2.1 Laboratory Receipt

When samples arrive at the laboratory, sample receiving personnel inspect the coolers and samples. The integrity of each sample must be determined by comparing sample labels or tags with the COC and by visual checks of the container for possible damage. Any non-conformance, irregularity, or compromised sample receipt must be documented on a Condition Upon Receipt Anomaly Form (CUR) and brought to the immediate attention of the client. The COC, shipping documents, documentation of any non-conformance, irregularity, or compromised sample receipt, record of client contact, and resulting instructions become part of the project record. Refer to SOP DV-QA-0003, *Sample Management and Chain of Custody* for detailed information on receipt of samples.

#### 23.2.1.1 Unique Sample Identification

All samples that are processed through the laboratory receive a unique sample identification to ensure that there can be no confusion regarding the identity of such samples at anytime. This system includes identification for all samples, subsamples and subsequent extracts and/or digestates.

The laboratory assigns a unique identification (e.g., Sample ID) code to each sample container received at the laboratory. This Primary ID is made up of the following information (consisting of 4 components):

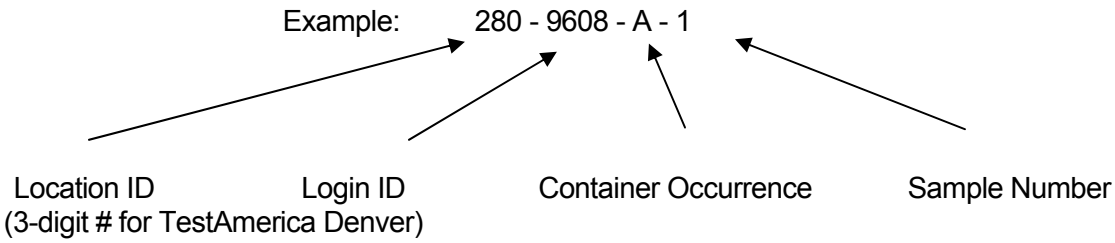

The above example states that TestAmerica Denver Laboratory (Location 280). Login ID is 9608 (unique to a particular client/job occurrence). The container code indicates it is the first container ("A") of Sample #1.

If the primary container goes through a prep step that creates a "new" container, then the new container is considered secondary and gets another ID. An example of this being a client sample in a 1-Liter amber bottle is sent through a Liquid/Liquid Extraction and an extraction vial is created from this step. The vial would be a SECONDARY container. The secondary ID has 5 components.

Example: 280 - 9608 - A - 1 - **A** ←——**Secondary Container Occurrence**

Example: 280-9608-A-1-A, would indicate the PRIMARY container listed above that went through a step that created the 1st occurrence of a Secondary container.

With this system, a client sample can literally be tracked throughout the laboratory in every step from receipt to disposal.

## 23.3 Sample Acceptance Policy

The laboratory has a written sample acceptance policy (Figure 23-2) that clearly outlines the circumstances under which samples shall be accepted or rejected. These include:

- a COC filled out completely;
- samples must be properly labeled;
- proper sample containers with adequate volume for the analysis (Sampling Guide) and necessary QC;
- samples must be preserved according to the requirements of the requested analytical method (Sampling Guide);
- sample holding times must be adhered to (Sampling Guide);
- all samples submitted for water/solid Volatile Organic analyses must have a Trip Blank submitted at the same time;
- the project manager will be notified if any sample is received in damaged condition.

Data from samples which do not meet these criteria are flagged and the nature of the variation from policy is defined. A copy of the sample acceptance policy is provided to each client prior to shipment of samples.

**23.3.1** After inspecting the samples, the sample receiving personnel sign and date the COC form, make any necessary notes of the samples' conditions and store them in appropriate refrigerators or storage locations.

**23.3.2** Any deviations from these checks that question the suitability of the sample for analysis, or incomplete documentation as to the tests required will be resolved by consultation with the client. If the sample acceptance policy criteria are not met, the laboratory shall either:

- Retain all correspondence and/or records of communications with the client regarding the disposition of rejected samples, or

- Fully document any decision to proceed with sample analysis that does not meet sample acceptance criteria.

| Note: North Carolina requires that they be notified when samples are processed that do not meet sample acceptance criteria. |
|---|

Once sample acceptance is verified, the samples are logged into the LIMS according SOP No. DV-QA-0003, *Sample Management and Chain of Custody.*

### 23.4 Sample Storage

In order to avoid deterioration, contamination or damage to a sample during storage and handling, from the time of receipt until all analyses are complete, samples are stored in refrigerators, freezers or protected locations suitable for the sample matrix, except metals sample containers which may be stored unrefrigerated**.** In addition, samples to be analyzed for volatile organic parameters are stored in separate refrigerators designated for volatile organic parameters only. Samples are never to be stored with reagents, standards or materials that may create contamination.

To ensure the integrity of the samples during storage, refrigerator blanks are maintained in the volatile sample refrigerators and analyzed every two weeks.

Analysts and technicians retrieve the sample container allocated to their analysis from the designated refrigerator, document the transfer of containers in LIMS and place them on carts, analyze the sample, and return the remaining sample to the refrigerator from which it originally came, documenting the return in LIMS. Empty containers are stored in the sample archive area until disposal, this transfer is documented in LIMS. All samples are kept in the refrigerators until the project is invoiced. At this time, the samples will be retained for an additional thirty days, either in the refrigerators, or in the sample archive area. Special arrangements may be made to store samples for longer periods of time. This extended holding period allows additional metal analyses to be performed on the archived sample and assists clients in dealing with legal matters or regulatory issues. Upon disposal, the drum number used for disposal is logged into LIMS.

Access to the laboratory is controlled such that sample storage need not be locked at all times unless a project specifically demands it. Samples are accessible to laboratory personnel only. Visitors to the laboratory are prohibited from entering the refrigerator and laboratory areas unless accompanied by an employee of TestAmerica.

### 23.5 Hazardous Samples and Foreign Soils

To minimize exposure to personnel and to avoid potential accidents, hazardous and foreign soil samples are stored in a designated area. For any sample that is known to be hazardous at the time of receipt or, if after completion of analysis the result exceeds the acceptable regulatory levels, the analyst will notify login staff so the hazardous sample is properly labeled as such. The sample itself is clearly marked with a label reading “HAZARDOUS”, “PCBs” or “FOREIGN SOIL”. All hazardous samples are either returned to the client or disposed of appropriately through a hazardous waste disposal firm. All foreign soil samples are sent out for incineration

by a USDA-approved waste disposal facility; refer to SOP DV-QA-0019, *Quarantine Soils Procedure* for more detail.

### 23.6 Sample Shipping

In the event that the laboratory needs to ship samples, the samples are placed in a cooler with enough ice to ensure the samples remain just above freezing and at or below 6.0°C during transit. The samples are carefully surrounded by packing material to avoid breakage (yet maintain appropriate temperature). A trip blank is enclosed for those samples requiring water/solid volatile organic analyses (see Note). The chain-of-custody form is signed by the sample control technician and attached to the shipping paperwork. Samples are generally shipped overnight express or hand-delivered by a TestAmerica courier to maintain sample integrity. All personnel involved with shipping and receiving samples must be trained to maintain the proper chain-of-custody documentation and to keep the samples intact and on ice. The Environmental, Health and Safety Manual contains additional shipping requirements.

**Note:** If a client does not request trip blank analysis on the COC or other paperwork, the laboratory will not analyze the trip blanks that were supplied. However, in the interest of good client service, the laboratory will advise the client at the time of sample receipt that it was noted that they did not request analysis of the trip blank; and that the laboratory is providing the notification to verify that they are not inadvertently omitting a key part of regulatory compliance testing.

### 23.7 Sample Disposal

Samples should be retained for a minimum of 30 days after the project report is sent, however, provisions may be made for earlier disposal of samples once the holding time is exceeded. Some samples are required to be held for longer periods based on regulatory or client requirements (e.g., 60 days after project report is sent). The laboratory must follow the longer sample retention requirements where required by regulation or client agreement. Several possibilities for sample disposal exist: the sample may be consumed completely during analysis, the sample may be returned to the customer or location of sampling for disposal, or the sample may be disposed of in accordance with the laboratory's waste disposal procedures (SOP: DV-HS-0005, *Excess Sample Material Management)*. All procedures in the laboratory Environmental, Health and Safety Manual are followed during disposal. Samples are normally maintained in the laboratory no longer than two months from receipt unless otherwise requested. Unused portions of samples found or suspected to be hazardous according to state or federal guidelines may be returned to the client upon completion of the analytical work.

All documentation and correspondence concerning the disposal of samples is kept on file. The LIMS Internal Chain of Custody software allows tracking for each sample container from the time of sample receipt through the disposal process, including such detail as the identifying number of the waste drum used for disposal. Pertinent information includes the date of disposal, nature of disposal (such as sample depletion, hazardous waste facility disposal, return to client), names of individuals who conducted the arrangements and physically completed the task. The laboratory will remove or deface sample labels prior to disposal unless this is accomplished through the disposal method (e.g., samples are incinerated). A Hazardous Waste Manifest will be prepared to document the disposal of each drum. Additional detail is in SOP DV-HS-0004, *Hazardous Waste Manifesting*.

**Figure 23-1. Example: Chain of Custody (COC)**

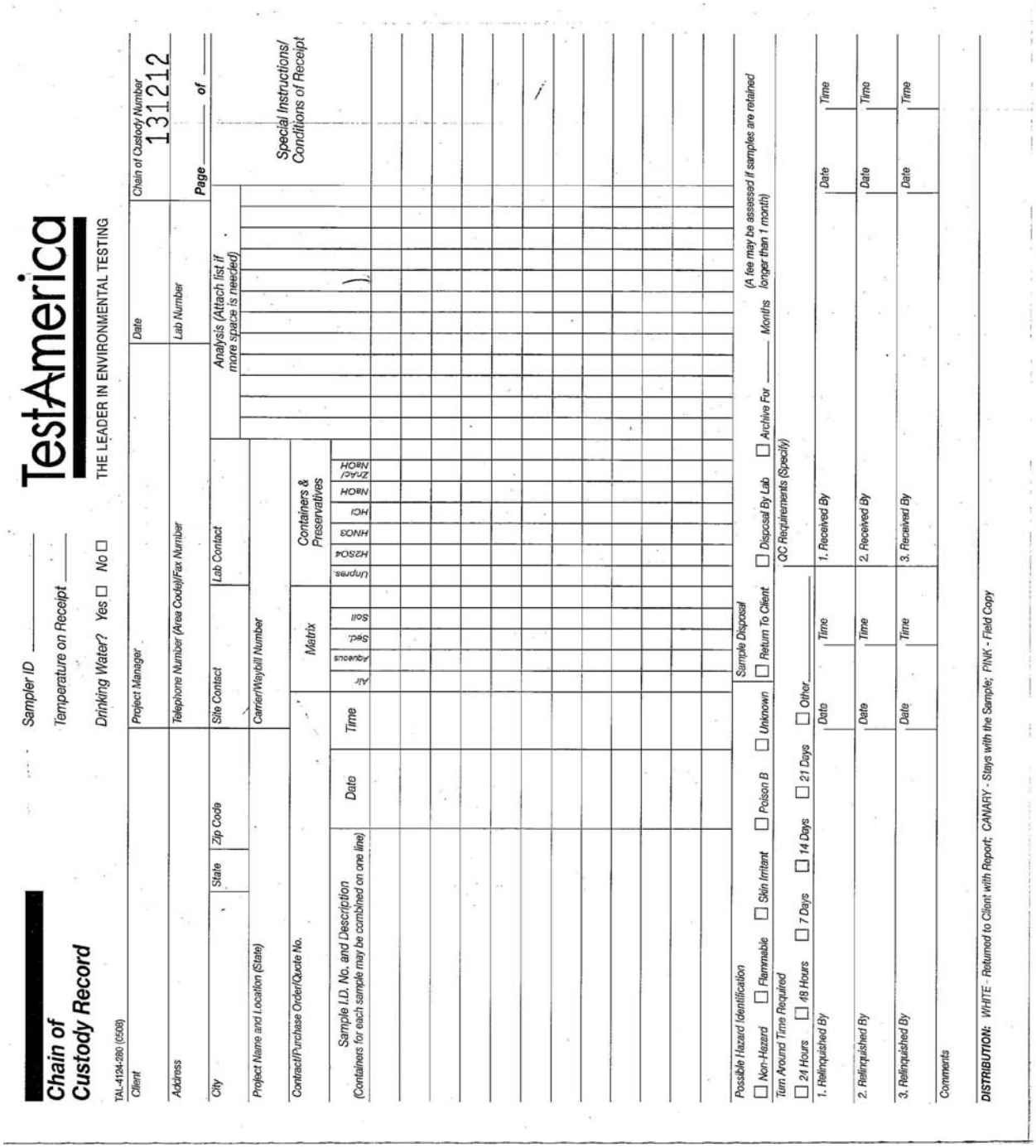

**Chain of Custody Record**

TAL-4124-280 (0508)

Sampler ID _____

Temperature on Receipt _____

Drinking Water? Yes ☐ No ☐

TestAmerica

THE LEADER IN ENVIRONMENTAL TESTING

Client

Project Manager

Date

Chain of Custody Number 131212

Address

Telephone Number (Area Code)/Fax Number

Lab Number

Page _____ of _____

City | State | Zip Code

Site Contact

Lab Contact

Project Name and Location (State)

Carrier/Waybill Number

Analysis (Attach list if more space is needed)

Special Instructions/ Conditions of Receipt

Contract/Purchase Order/Quote No.

Sample I.D. No. and Description (Containers for each sample may be combined on one line)

Date | Time

Matrix: Air, Aqueous, Sed., Soil

Containers & Preservatives: Unpres., H2SO4, HNO3, HCl, NaOH, ZnAc/NaOH

Possible Hazard Identification

☐ Non-Hazard ☐ Flammable ☐ Skin Irritant ☐ Poison B ☐ Unknown

Sample Disposal

☐ Return To Client ☐ Disposal By Lab ☐ Archive For _____ Months (A fee may be assessed if samples are retained longer than 1 month)

Turn Around Time Required

☐ 24 Hours ☐ 48 Hours ☐ 7 Days ☐ 14 Days ☐ 21 Days ☐ Other _____

QC Requirements (Specify)

1. Relinquished By | Date | Time | 1. Received By | Date | Time

2. Relinquished By | Date | Time | 2. Received By | Date | Time

3. Relinquished By | Date | Time | 3. Received By | Date | Time

Comments

DISTRIBUTION: WHITE - Returned to Client with Report; CANARY - Stays with the Sample; PINK - Field Copy

**Figure 23-2. Example: Sample Acceptance Policy**

All incoming work will be evaluated against the criteria listed below. Where applicable, data from any samples that do not meet the criteria listed below will be noted on the laboratory report defining the nature and substance of the variation. In addition the client will be notified either by telephone, fax or e-mail ASAP after the receipt of the samples.

1) Samples must arrive with labels intact with a Chain of Custody filled out completely. The following information must be recorded.
   - Client name, address, phone number and fax number (if available)
   - Project name and/or number
   - The sample identification
   - Date, time and location of sampling
   - The collectors name
   - The matrix description
   - The container description
   - The total number of each type of container
   - Preservatives used
   - Analysis requested
   - Requested turnaround time (TAT)
   - Any special instructions
   - Purchase Order number or billing information (e.g. quote number) if available
   - The date and time that each person received or relinquished the sample(s), including their signed name.
   - The date and time of receipt must be recorded between the last person to relinquish the samples and the person who receives the samples in the lab, and they must be exactly the same.
   - Information must be legible

2) Samples must be properly labeled.
   - Use durable labels (labels provided by TestAmerica are preferred)
   - Include a unique identification number
   - Include sampling date and time & sampler ID
   - Include preservative used.
   - Use indelible ink
   - Information must be legible

3) Proper sample containers with adequate volume for the analysis and necessary QC are required for each analysis requested. See Lab Sampling Guide.

4) Samples must be preserved according to the requirements of the requested analytical method (See Sampling Guide**.**

5) Most analytical methods require chilling samples to 4$^{o}$ C (other than water samples for metals analysis). For these methods, the criteria are met if the samples are chilled to below 6$^{o}$ C and above freezing (0$^{o}$C). For methods with other temperature criteria (e.g. some bacteriological methods

require ≤ 10 °C), the samples must arrive within ± 2° C of the required temperature or within the method specified range.

**Note:** Samples that are hand delivered to the laboratory immediately after collection may not have had time to cool sufficiently. In this case the samples will be considered acceptable as long as there is evidence that the chilling process has begun (arrival on ice).

- Chemical preservation (pH) will be verified prior to analysis and the project manager will be notified immediately if there is a discrepancy. If analyses will still be performed, all affected results will be flagged to indicate improper preservation.

- For Volatile Organic analyses in drinking water (Methods 502.2 or 524.2). Residual chlorine must be neutralized prior to preservation. If there is prior knowledge that the samples are not chlorinated, state it on the COC and use the VOA vials pre-preserved with HCl. The following are other options for a sampler and laboratory where the presence of chlorine is not known:
  - 1. Test for residual chlorine in the field prior to sampling.
    - If no chlorine is present, the samples are to be preserved using HCl as usual.
    - If chlorine is present, add either ascorbic acid or sodium thiosulfate prior to adding HCl.
  - 2. Use VOA vials pre-preserved with sodium thiosulfate or ascorbic acid and add HCl after filling the VOA vial with the sample.

- **FOR WATER SAMPLES TESTED FOR CYANIDE (by Standard Methods or EPA 335)**

  - In the Field: Samples are to be tested for Sulfide using lead acetate paper prior to the addition of Sodium Hydroxide (NaOH). If sulfide is present, the sample must be treated with Cadmium Chloride and filtered prior to the addition of NaOH.

    - If the sulfide test and treatment is not performed in the field, the lab will test the samples for sulfide using lead acetate paper at the time of receipt and if sulfide is present in the sample, the client will be notified and given the option of retaking the sample and treating in the field per the method requirements or the laboratory can analyze the samples as delivered and qualify the results in the final report.

  - It is the responsibility of the client to notify the laboratory if thiosulfate, sulfite, or thiocyanate are known or suspected to be present in the sample. This notification may be on the chain of custody. The samples may need to be subcontracted to a laboratory that performs a UV digestion. If the lab does not perform the UV digestion on samples that contain these compounds, the results must be qualified in the final report.

  - The laboratory must test the sample for oxidizing agents (e.g. Chlorine) prior to analysis and treat according to the methods prior to distillation. (ascorbic acid or sodium arsenite are the preferred choice).

6) Sample Holding Times
   - TestAmerica will make every effort to analyze samples within the regulatory holding time. Samples must be received in the laboratory with enough time to perform the sample analysis. Except for short holding time samples (< 48hr HT) sample must be received with at least 48 hrs (working days) remaining on the holding time for us to ensure analysis.

   - Analyses that are designated as “field” analyses (Odor, pH, Dissolved Oxygen, Disinfectant Residual; a.k.a. Residual Chlorine, and Redox Potential) should be analyzed ASAP by the field

sampler prior to delivering to the lab (within 15 minutes). However, if the analyses are to be performed in the laboratory, TestAmerica will make every effort to analyze the samples within 24 hours from receipt of the samples in the testing laboratory. Samples for "field" analyses received after 4:00 pm on Friday or on the weekend will be analyzed no later than the next business day after receipt (Monday unless a holiday). Samples will remain refrigerated and sealed until the time of analysis. The actual times of all "field" sample analyses are noted on the "Short Hold Time Detail Report" in the final report. Samples analyzed in the laboratory will be qualified on the final report with an 'H' to indicate holding time exceedance.

7) All samples submitted for Volatile Organic analyses must have a Trip Blank submitted at the same time. TestAmerica will supply a blank with the bottle order.

8) The project manager will be notified if any sample is received in damaged condition. TestAmerica will request that a sample be resubmitted for analysis.

9) Recommendations for packing samples for shipment.

   - Pack samples in Ice rather than "Blue" ice packs.
   - Soil samples should be placed in plastic zip-lock bags. The containers often have dirt around the top and do not seal very well and are prone to intrusion from the water from melted ice.
   - Water samples would be best if wrapped with bubble-wrap or paper (newspaper, or paper towels work) and then placed in plastic zip-lock bags.
   - Fill extra cooler space with bubble wrap.

**Figure 23-3. Example: Cooler Receipt Form**

*TestAmerica Denver*
**Sample Receiving Checklist**

Login #:_____ Date/Time Received:_____

Company Name & Sampling Site: _____

**PM/PMA to Complete This Section at Cooler Greet:** Residual chlorine check required: Yes ☐ No ☐ Quarantined: Yes ☐ No ☐

TALS Project #:
Special Instructions:

Time Zone: • EDT/EST • CDT/CST • MDT/MST • PDT/PST • OTHER State:

**PM/PMA to Complete This Section Upon Review:**
Matrix/Count: Field QC samples: Client Requested MS/MSD:

Document any problems or discrepancies and the actions taken to resolve them on a Condition Upon Receipt Anomaly Report (CUR)

**Unpacking Checks:** ***Initials*** _____

Temperatures (°C): _____ _____ _____ _____ _____ _____ _____ _____

| N/A | Yes | No | | |
|---|---|---|---|---|
| ☐ | ☐ | ☐ | 1. | Is radioactivity at or below background? BKG CPM:_____ CPM Reading: _____ |
| ☐ | ☐ | ☐ | 2. | Is the cooler's custody seal intact? Do cooler or samples appear to not have been compromised or tampered with? |
| ☐ | ☐ | ☐ | 3. | Were samples received on ice? Is cooler temperature acceptable? Has temperature been recorded? |
| ☐ | ☐ | ☐ | 4. | Is COC present; filled out in ink and legible; and filled out with all pertinent information? |
| ☐ | ☐ | ☐ | 5. | Is the Field Sampler's name present on the COC? |
| ☐ | ☐ | ☐ | 6. | Are there no discrepancies between the sample IDs on the containers and the COC? |
| ☐ | ☐ | ☐ | 7. | Are samples received within Holding Time? |
| ☐ | ☐ | ☐ | 8. | Do sample containers have legible labels? |
| ☐ | ☐ | ☐ | 9. | Are all sample containers intact (not broken or leaking)? |
| ☐ | ☐ | ☐ | 10. | Are appropriate sample containers used? Are sample bottles completely filled? Is sufficient vol. for all requested analyses, incl. any requested MS/MSDs provided? |
| ☐ | ☐ | ☐ | 11. | No splitting or compositing of samples required? |
| ☐ | ☐ | ☐ | 12. | Was Sample Preservation verified and found to be correct? |
| ☐ | ☐ | ☐ | 13. | Do all VOA sample vials have no headspace or bubbles >6 mm (1/4") in diameter? |
| ☐ | ☐ | ☐ | 14. | Were VOA vials labeled as preserved? Preservative ☐ HCl ☐ 0-6°C ☐ Sodium Thiosulfate ☐ Ascorbic Acid |
| ☐ | ☐ | ☐ | 15. | Are all samples single phase? (i.e., no multiphasic samples are present.) |
| ☐ | ☐ | ☐ | 16. | Was Residual Chlorine checked and noted on the CUR if present? |

**Login Checks:** ***Initials*** _____

| | | | | |
|---|---|---|---|---|
| ☐ | ☐ | ☐ | 17. | Was a Priority Form completed for any short holds or quick TATs? |
| ☐ | ☐ | ☐ | 18. | Were any tests logged for subcontract? |
| ☐ | ☐ | ☐ | 19. | Were special archiving instructions and login instructions indicated in the Project Notes? |

Note Archive Requirements: _____

| | | | | |
|---|---|---|---|---|
| ☐ | ☐ | ☐ | 20. | Were multiple Series logged for this job? |

**Labeling and Storage Checks:** ***Initials*** _____

| | | | | |
|---|---|---|---|---|
| ☐ | ☐ | ☐ | 21. | If subcontract work was requested, was volume placed on sub shelf? |
| ☐ | ☐ | ☐ | 22. | Did the sample ID on TA label match the client's sample ID on container? ***Verified by:*** _____ |
| ☐ | ☐ | ☐ | 23. | Were stickers for special archiving instructions affixed to each box? |

SDG labels applied ***(initials):*** _____ ***Verified by:*** _____

G:\QA\Edit\FORMS\Sample Receiving\Att 1_DV-QA-0003_Sample Receiving Checklist Rev 9.3.doc

# SECTION 24. ASSURING THE QUALITY OF TEST RESULTS

## 24.1 Overview

In order to assure our clients of the validity of their data, the laboratory continuously evaluates the quality of the analytical process. The analytical process is controlled not only by instrument calibration as discussed in Section 20, but also by routine process quality control measurements (e.g., Blanks, Laboratory Control Samples (LCS), Matrix Spikes (MS), duplicates (DUP), surrogates, Internal Standards (IS)). These quality control checks are performed as required by the method or regulations to assess precision and accuracy. In addition to the routine process quality control samples, Proficiency Testing (PT) Samples (concentrations unknown to laboratory) are analyzed to help ensure laboratory performance.

## 24.2 Controls

Sample preparation or pre-treatment is commonly required before analysis. Typical preparation steps include homogenization, grinding, solvent extraction, sonication, acid digestion, distillation, evaporation, and drying. During these pre-treatment steps, samples are arranged into discreet manageable groups referred to as preparation (prep) batches. Prep batches provide a means to control variability in sample treatment. Control samples are added to each prep batch to monitor method performance and are processed through the entire analytical procedure with investigative/field samples.

## 24.3 Negative Controls

**Table 24-1. Example – Negative Controls**

| Control Type | Details |
|---|---|
| Method Blank (MB) | Used to assess preparation and analysis for possible contamination during the preparation and processing steps. |
| | The specific frequency of use for method blanks during the analytical sequence is defined in the specific standard operating procedure for each analysis. Generally it is 1 for each batch of samples; not to exceed 20 environmental samples. |
| | The method blank is prepared from a clean matrix similar to that of the associated samples that is free from target analytes (e.g., Reagent water, Ottawa sand, glass beads, etc.) and is processed along with and under the same conditions as the associated samples.<br><br>The method blank goes through all of the steps of the process (including as necessary: filtration, clean-ups, etc.). |
| | Reanalyze or qualify associated sample results when the concentration of a targeted analyte in the blank is at or above ½ the reporting limit as established by the method or by regulation, AND is greater than 1/10 of the amount measured in the sample. |
| Calibration Blanks | Prepared and analyzed along with calibration standards where applicable. They are prepared using the same reagents that are used to prepare the standards. In some analyses the calibration blank may be included in the calibration curve. |
| Instrument Blanks | Blank reagents or reagent water that may be processed during an analytical sequence in order to assess contamination in the analytical system. In general, instrument blanks are used to differentiate between contamination caused by the analytical system and that caused by the sample handling or sample prep process. Instrument blanks may also be inserted throughout the analytical sequence to minimize the effect of carryover from samples with high analyte content. |

**Table 24-1. Example – Negative Controls**

| Control Type | Details |
|---|---|
| Trip Blank [1] | Required to be submitted by the client with each shipment of samples requiring aqueous and solid volatiles analyses (or as specified in the client's project plan). Additionally, trip blanks may be prepared and analyzed for volatile analysis of air samples, when required by the client. A trip blank may be purchased (certified clean) or is prepared by the laboratory by filling a clean container with pure deionized water that has been purged to remove any volatile compounds. Appropriate preservatives are also added to the container. The trip blank is sent with the bottle order and is intended to reflect the environment that the containers are subjected to throughout shipping and handling and help identify possible sources if contamination is found. The field sampler returns the trip blank in the cooler with the field samples. |
| Field Blanks [1] | Sometimes used for specific projects by the field samplers. A field blank prepared in the field by filling a clean container with pure reagent water and appropriate preservative, if any, for the specific sampling activity being undertaken. (EPA OSWER) |
| Equipment Blanks [1] | Also sometimes created in the field for specific projects. An equipment blank is a sample of analyte-free media which has been used to rinse common sampling equipment to check effectiveness of decontamination procedures. (**TNI**) |
| Holding Blanks | Also referred to as refrigerator or freezer blanks, are used to monitor the sample storage units for volatile organic compounds during the storage of VOA samples in the laboratory |

[1] When known, these field QC samples should not be selected for matrix QC as it does not provide information on the behavior of the target compounds in the field samples. Usually, the client sample ID will provide information to identify the field blanks with labels such as "FB", "EB", or "TB."

Evaluation criteria and corrective action for these controls are defined in the specific standard operating procedure for each analysis.

**24.3.1** **Negative Controls for Microbiological Methods** – Microbiological Methods utilize a variety of negative controls throughout the process to ensure that false positive results are not obtained. These controls are critical to the validity of the microbiological analyses. Some of these negative controls are*:*

**Table 24-2. Negative Controls for Microbiology**

| Control Type | Details |
|---|---|
| Sterility Checks (Media) | Analyzed for each lot of pre-prepared media, ready-to-use media and for each batch of medium prepared by the laboratory. |
| Filtration Blanks | Blanks that are run at the beginning and end for each sterilized filtration unit used in a filtration series. For pre-sterilized single use funnels a sterility check is performed on at least one funnel per lot. |
| Sterility checks (Sample Containers) | Performed on at least one container per lot of purchased, pre-sterilized containers. If containers are prepared and sterilized by the laboratory, one container per sterilization batch is checked. Container sterility checks are performed using non-selective growth media. |
| Sterility Checks (Dilution Water) | Performed on each batch of dilution water prepared by the laboratory and on each batch of pre-prepared dilution water. All checks are performed using non-selective growth media. |
| Sterility Checks (Filters) | Also performed on at least one filter from each new lot of membrane filters using non-selective growth media. |

Negative culture controls demonstrate that a media does not support the growth of non-target organisms and ensures that there is not an atypical positive reaction from the target organisms.

Prior to the first use of the media, each lot of pre-prepared selective media or batch of laboratory prepared selective media is analyzed with at least one known negative culture control as appropriate to the method.

### 24.4 Positive Controls

Control samples (e.g., QC indicators) are analyzed with each batch of samples to evaluate data based upon (1) Method Performance (Laboratory Control Sample (LCS) or Blank Spike (BS)), which entails both the preparation and measurement steps; and (2) Matrix Effects (Matrix Spike (MS) (Matrix spikes are not applicable to air) or Sample Duplicate (MD, DUP), which evaluates field sampling accuracy, precision, representativeness, interferences, and the effect of the matrix on the method performed. Each regulatory program and each method within those programs specify the control samples that are prepared and/or analyzed with a specific batch

Note that frequency of control samples vary with specific regulatory, methodology and project specific criteria. Complete details on method control samples are as listed in each analytical SOP.

#### 24.4.1 Method Performance Control - Laboratory Control Sample (LCS)

The LCS measures the accuracy of the method in a blank matrix and assesses method performance independent of potential field sample matrix affects in a laboratory batch.

The LCS is prepared from a clean matrix similar to that of the associated samples that is free from target analytes (for example: Reagent water, Ottawa sand, glass beads, etc.) and is processed along with and under the same conditions as the associated samples. The LCS is spiked with verified known amounts of analytes or is made of a material containing known and verified amounts of analytes, taken through all preparation and analysis steps along with the field samples. Where there is no preparation taken for an analysis (such as in aqueous volatiles), or when all samples and standards undergo the same preparation and analysis process (such as Phosphorus), a calibration verification standard is reported as the LCS. In some instances where there is no practical clean solid matrix available, aqueous LCS's may be processed for solid matrices; final results may be calculated as mg/kg or ug/kg, assuming 100% solids and a weight equivalent to the aliquot used for the corresponding field samples, to facilitate comparison with the field samples.

Certified pre-made reference material purchased from a NIST/A2LA accredited vendor may also be used for the LCS when the material represents the sample matrix or the analyte is not easily spiked (e.g. solid matrix LCS for metals, TDS, etc.).

The specific frequency of use for LCS during the analytical sequence is defined in the specific standard operating procedure for each analysis. It is generally 1 for each batch of samples; not to exceed 20 environmental samples.

If the mandated or requested test method, or project requirements, do not specify the spiking components, the laboratory shall spike all reportable components to be reported in the Laboratory Control Sample (and Matrix Spike) where applicable (e.g. no spike of pH). However,

in cases where the components interfere with accurate assessment (such as simultaneously spiking chlordane, toxaphene and PCBs in Method 608), the test method has an extremely long list of components or components are incompatible, at a minimum, a representative number of the listed components (see below) shall be used to control the test method. The selected components of each spiking mix shall represent all chemistries, elution patterns and masses, permit specified analytes and other client requested components. However, the laboratory shall ensure that all reported components are used in the spike mixture within a two-year time period.

- For methods that have 1-10 target analytes, spike all components.
- For methods that include 11-20 target analytes, spike at least 10 or 80%, whichever is greater.
- For methods with more than 20 target analytes, spike at least 16 components.
- Exception: Due to analyte incompatibility in pesticides, Toxaphene and Chlordane are only spiked at client request based on specific project needs.
- Exception: Due to analyte incompatibility between the various PCB aroclors, Aroclors 1016 and 1260 are used for spiking as they cover the range of all of the aroclors. Specific aroclors may be used by request on a project specific basis.

### 24.4.2 Positive Controls for Microbiological Methods

- Each lot of pre-prepared media (including chromofluorogenic reagent) and each batch of laboratory prepared media is tested with a pure culture of known positive reaction.

## 24.5 Sample Matrix Controls

**Table 24-3. Sample Matrix Control**

| Control Type | Details | |
|---|---|---|
| Matrix Spikes (MS) | Use | Used to assess the effect sample matrix of the spiked sample has on the precision and accuracy of the results generated by the method used; |
| | Typical Frequency [1] | At a minimum, with each matrix-specific batch of samples processed, an MS is carried through the complete analytical procedure. Unless specified by the client, samples used for spiking are randomly selected and rotated between different client projects.If the mandated or requested test method does not specify the spiking components, the laboratory shall spike all reportable components to be reported in the Laboratory Control Sample and Matrix Spike. Refer to the method SOP for complete details |
| | Description | Essentially a sample fortified with a known amount of the test analyte(s). |
| Surrogate | Use | Measures method performance to sample matrix (organics only). |
| | Typical Frequency [1] | Added to all samples, standards, and blanks, for all organic chromatography methods except when the matrix precludes its use or when a surrogate is not available. The recovery of the surrogates is compared to the acceptance limits for the specific method. Poor surrogate recovery may indicate a problem with sample composition and shall be reported, with data qualifiers, to the client whose sample produced poor recovery. |
| | Description | Similar to matrix spikes except the analytes are compounds with properties that mimic the analyte of interest and are unlikely to be found in environment samples. |

**Table 24-3. Sample Matrix Control**

| Control Type | Details | |
|---|---|---|
| Duplicates[2] | Use | For a measure of analytical precision, with each matrix-specific batch of samples processed, a matrix duplicate (MD or DUP) sample, matrix spike duplicate (MSD), or LCS duplicate (LCSD) is carried through the complete analytical procedure. |
| | Typical Frequency [1] | Duplicate samples are usually analyzed with methods that do not require matrix spike analysis. |
| | Description | Performed by analyzing two aliquots of the same field sample independently or an additional LCS. |
| Internal Standards | Use | Spiked into all environmental and quality control samples (including the initial calibration standards) to monitor the qualitative aspect of organic and some inorganic analytical measurements. |
| | Typical Frequency [1] | All organic and ICP methods as required by the analytical method. |
| | Description | Used to correct for matrix effects and to help troubleshoot variability in analytical response and are assessed after data acquisition. Possible sources of poor internal standard response are sample matrix, poor analytical technique or instrument performance. |

[1] See the specific analytical SOP for type and frequency of sample matrix control samples.
[2] LCSD's are normally not performed except when regulatory agencies or client specifications require them. The recoveries for the spiked duplicate samples must meet the same laboratory established recovery limits as the accuracy QC samples. If an LCSD is analyzed both the LCS and LCSD must meet the same recovery criteria and be included in the final report. The precision measurement is reported as "Relative Percent Difference" (RPD). Poor precision between duplicates (except LCS/LCSD) may indicate non-homogeneous matrix or sampling.

## 24.6 Acceptance Criteria (Control Limits)

As mandated by the test method and regulation, each individual analyte in the LCS, MS, or Surrogate Spike is evaluated against the control limits published in the test method. Where there are no established acceptance criteria, the laboratory calculates in-house control limits with the use of control charts or, in some cases, utilizes client project specific control limits. When this occurs, the regulatory or project limits will supersede the laboratory's in-house limits.

**Note:** For methods, analytes and matrices with very limited data (e.g., unusual matrices not analyzed often), interim limits are established using available data or by analogy to similar methods or matrices.

Once control limits have been established, they are verified, reviewed, and updated if necessary on a semi-annual basis unless the method requires more frequent updating. Control limits are established per method (as opposed to per instrument) regardless of the number of instruments utilized.

Laboratory generated % Recovery acceptance (control) limits are generally established by taking $\pm$ 3 Standard Deviations (99% confidence level) from the average recovery of a minimum of 20-30 data points (more points are preferred).

- Regardless of the calculated limit, the limit should be no tighter than the Calibration Verification (ICV/CCV). (Unless the analytical method specifies a tighter limit).

- In-house limits cannot be any wider than those mandated in a regulated analytical method. Client or contract required control limits are evaluated against the laboratory's statistically

derived control limits to determine if the data quality objectives (DQOs) can be achieved. If laboratory control limits are not consistent with DQOs, then alternatives must be considered, such as method improvements or use of an alternate analytical method.

- The lowest acceptable recovery limit will be 10% (the analyte must be detectable and identifiable). Exception: The lowest acceptable recovery limit for Benzidine will be 5% and the analyte must be detectable and identifiable.

- If either the high or low end of the control limit changes by $\leq$ 5% from previous, the control chart is visually inspected and, using professional judgment, the limit(s) may be left unchanged if there is no affect on laboratory ability to meet the existing limits.

**24.6.1** The lab must be able to generate a current listing of their control limits and track when the updates are performed. In addition, the laboratory must be able to recreate historical control limits. Refer to Denver SOP DV-QA-003P, *Quality Assurance Program* for a detailed description of the control charting procedure.

**24.6.2** A LCS that is within the acceptance criteria establishes that the analytical system is in control and is used to validate the process. Samples that are analyzed with a LCS with recoveries outside of the acceptance limits may be determined as out of control and should be reanalyzed if possible. If reanalysis is not possible, then the results for all affected analytes for samples within the same batch must be qualified when reported. The internal corrective action process (see Section 12) is also initiated if an LCS exceeds the acceptance limits. Sample results may be qualified and reported without reanalysis if:

- The analyte results are below the reporting limit and the LCS is above the upper control limit.

- If the analytical results are above the relevant regulatory limit and the LCS is below the lower control limit.

Or, for TNI and Department of Defense (DoD) work, there are an allowable number of Marginal Exceedances (ME):

| | |
|---|---|
| <11 analytes | 0 marginal exceedances are allowed. |
| 11 – 30 Analytes | 1 marginal exceedance is allowed |
| 31-50 Analytes | 2 marginal exceedances are allowed |
| 51-70 Analytes | 3 marginal exceedances are allowed |
| 71-90 Analytes | 4 marginal exceedances are allowed |
| > 90 Analytes | 5 marginal exceedances are allowed |

- Marginal exceedances are recovery exceedances between 3 SD and 4 SD from the mean recovery limit (TNI).

- Marginal exceedances must be random. If the same analyte exceeds the LCS control limit repeatedly, it is an indication of a systematic problem. The source of the error must be

located and corrective action taken. The laboratory has a system to monitor marginal exceedances to ensure that they are random.

Though marginal exceedences may be allowed, the data must still be qualified to indicate it is outside of the normal limits.

**24.6.3** If the MS/MSDs do not meet acceptance limits, the MS/MSD and the associated spiked sample is reported with a qualifier for those analytes that do not meet limits. If obvious preparation errors are suspected, or if requested by the client, unacceptable MS/MSDs are reprocessed and reanalyzed to prove matrix interference. A more detailed discussion of acceptance criteria and corrective action can be found in the lab's method SOPs and in Section 12.

**24.6.4** If a surrogate standard falls outside the acceptance limits, if there is not obvious chromatographic matrix interference, reanalyze the sample to confirm a possible matrix effect. If the recoveries confirm or there was obvious chromatographic interference, results are reported from the original analysis and a qualifier is added. If the reanalysis meets surrogate recovery criteria, the second run is reported (or both are reported if requested by the client). Under certain circumstances, where all of the samples are from the same location and share similar chromatography, the reanalysis may be performed on a single sample rather than all of the samples and if the surrogate meets the recovery criteria in the reanalysis, all of the affected samples would require reanalysis.

### 24.7 Additonal Procedures to Assure Quality Control

The laboratory has written and approved method SOPs to assure the accuracy of the test method including calibration (see Section 20), use of certified reference materials (see Section 21) and use of PT samples (see Section 15).

A discussion regarding MDLs, Limit of Detection (LOD) and Limit of Quantitation (LOQ) can be found in Section 19.

- Use of formulae to reduce data is discussed in the method SOPs and in Section 20.
- Selection of appropriate reagents and standards is included in Section 9 and 21.
- A discussion on selectivity of the test is included in Section 5.
- Constant and consistent test conditions are discussed in Section 18.
- The laboratories sample acceptance policy is included in Section 23.
-

## SECTION 25. REPORTING RESULTS

### 25.1 Overview

The results of each test are reported accurately, clearly, unambiguously, and objectively in accordance with State and Federal regulations as well as client requirements. Analytical results are issued in a format that is intended to satisfy customer and laboratory accreditation

requirements as well as provide the end user with the information needed to properly evaluate the results. Where there is conflict between client requests and laboratory ethics or regulatory requirements, the laboratory's ethical and legal requirements are paramount, and the laboratory will work with the client during project set up to develop an acceptable solution. Refer to Section 7.

A variety of report formats are available to meet specific needs.

In cases where a client asks for simplified reports, there must be a written request from the client. There still must be enough information that would show any analyses that were out of conformance (QC out of limits) and there should be a reference to a full report that is made available to the client. Review of reported data is included in Section 19.

## 25.2 Test Reports

Analytical results are reported in a format that is satisfactory to the client and meets all requirements of applicable accrediting authorities and agencies. A variety of report formats are available to meet specific needs. The report is printed on laboratory letterhead, reviewed, and signed by the appropriate project manager. At a minimum, the standard laboratory report shall contain the following information:

**25.2.1** A report title (e.g. Analytical Report For Samples) with a "sample results" column header.

**25.2.2** Each report cover page printed on company letterhead, which includes the laboratory name, address and telephone number.

**25.2.3** A unique identification of the report (e.g. job number) and on each page an identification in order to ensure the page is recognized as part of the report and a clear identification of the end.

**Note:** Page numbers of report are represented as page # of ##. Where the first number is the page number and the second is the total number of pages.

**25.2.4** A copy of the chain of custody (COC).

- Any COCs involved with Subcontracting are included.

**25.2.5** The name and address of client and a project name/number, if applicable.

**25.2.6** Client project manager or other contact

**25.2.7** Description and unambiguous identification of the tested sample(s) including the client identification code.

**25.2.8** Date of receipt of sample, date and time of collection, and date(s) of test preparation and performance, and time of preparation or analysis if the required holding time for either activity is less than or equal to 72 hours.

**25.2.9** Date reported or date of revision, if applicable.

**25.2.10** Method of analysis including method code (EPA, Standard Methods, etc).

**25.2.11** Reporting Limits

**25.2.12** Method detection limits (if requested)

**25.2.13** Definition of Data qualifiers and reporting acronyms (e.g. ND).

**25.2.14** Sample results.

**25.2.15** QC data consisting of method blank, surrogate, LCS, and MS/MSD recoveries and control limits.

**25.2.16** Condition of samples at receipt including temperature. This may be accomplished in a narrative or by attaching sample login sheets (Refer to Sec. 25.2.4 – Item 3 regarding additional addenda).

**25.2.17** A statement expressing the validity of the results, that the source methodology was followed and all results were reviewed for error.

**25.2.18** A statement to the effect that the results relate only to the items tested and the sample as received by the laboratory.

**25.2.19** A statement that the report shall not be reproduced except in full, without prior express written approval by the laboratory coordinator

**25.2.20** A signature and title of the person(s) accepting responsibility for the content of the report and date of issue. Signatories are appointed by the Lab Director.

**25.2.21** When TNI accreditation is required, the lab shall certify that the test results meet all requirements of TNI or provide reasons and/or justification if they do not.

**25.2.22** The laboratory includes a cover letter.

**25.2.23** Where applicable, a narrative to the report that explains the issue(s) and corrective action(s) taken in the event that a specific accreditation or certification requirement was not met.

**25.2.24** When soil samples are analyzed, a specific identification as to whether soils are reported on a “wet weight” or “dry weight” basis.

**25.2.25** Appropriate laboratory certification number for the state of origin of the sample, if applicable.

**25.2.26** If only part of the report is provided to the client (client requests some results before all of it is complete), it must be clearly indicated on the report (e.g., partial report). A complete report must be sent once all of the work has been completed.

**25.2.27** Any non-TestAmerica subcontracted analysis results are provided as a separate report on the official letterhead of the subcontractor. All TestAmerica subcontracting is clearly identified on the report as to which laboratory performed a specific analysis.

**25.2.28** Non-accredited tests shall be clearly identified in the case narrative when claims of accreditation to the TNI standard are made.

Note: Refer to the Corporate SOP on Electronic Reporting and Signature Policy (No. CA-I-P-002) for details on internally applying electronic signatures of approval.

### 25.3 Reporting Level or Report Type

The laboratory offers four levels of quality control reporting. Each level, in addition to its own specific requirements, contains all the information provided in the preceding level. The packages provide the following information in addition to the information described above:

- Level I is a report with the features described in Section 25.2 above. TestAmerica Denver rarely utilizes this report.
- Level II is a Level I report plus summary information, including results for the method blank reported to the laboratory MDL, percent recovery for laboratory control samples and matrix spike samples, and the RPD values for all MSD and sample duplicate analyses.
- Level III contains all the information supplied in Level II, but presented on the CLP-like summary forms, and relevant calibration information. A Level II report is not included, unless specifically requested. No raw data is provided.
- Level IV is the same as Level III with the addition of all raw supporting data.

In addition to the various levels of QC packaging, the laboratory also provides reports in diskette deliverable form. Initial reports may be provided to clients by facsimile. All faxed reports are followed by hardcopy. Procedures used to ensure client confidentiality are outlined in Section 25.6.

#### 25.3.1 Electronic Data Deliverables (EDDs)

EDDs are routinely offered as part of TestAmerica's services. The Denver laboratory offers a variety of EDD formats including Environmental Restoration Information Management System (ERPIMS), Excel, Dbase, GISKEY, SEDD 2A, and Text Files.

EDD specifications are submitted to the IT department by the PM for review and undergo the contract review process. Once the facility has committed to providing data in a specific

electronic format, the coding of the format may need to be performed. This coding is documented and validated. The validation of the code is retained by the IT staff coding the EDD.

EDDs shall be subject to a review to ensure their accuracy and completeness. If EDD generation is automated, review may be reduced to periodic screening if the laboratory can demonstrate that it can routinely generate that EDD without errors. Any revisions to the EDD format must be reviewed until it is demonstrated that it can routinely be generated without errors. If the EDD can be reproduced accurately and if all subsequent EDDs can be produced error-free, each EDD does not necessarily require a review.

### 25.4 Supplemental Information for Test

The lab identifies any unacceptable QC analyses or any other unusual circumstances or observations such as environmental conditions and any non-standard conditions that may have affected the quality of a result. This is typically in the form of a footnote or a qualifier and/or a narrative explaining the discrepancy in the front of the report.

Numeric results with values outside of the calibration range, either high or low are qualified as 'estimated'.

Where quality system requirements are not met, a statement of compliance/non-compliance with requirements and/or specifications is required, including identification of test results derived from any sample that did not meet TNI sample acceptance requirements such as improper container, holding time, or temperature.

Where applicable, a statement on the estimated uncertainty of measurements; information on uncertainty is needed when a client's instructions so require.

Opinions and Interpretations - The test report contains objective information, and generally does not contain subjective information such as opinions and interpretations. If such information is required by the client, the Laboratory Director will determine if a response can be prepared. If so, the Laboratory Director will designate the appropriate member of the management team to prepare a response. The response will be fully documented, and reviewed by the Laboratory Director, before release to the client. There may be additional fees charged to the client at this time, as this is a non-routine function of the laboratory.

**Note:** Review of data deliverable packages for submittal to regulatory authorities requires responses to non-conforming data concerning potential impact on data quality. This necessitates a limited scope of interpretation, and this work is performed by the QA Department. This is the only form of "interpretation" of data that is routinely performed by the laboratory.

When opinions or interpretations are included in the report, the laboratory provides an explanation as to the basis upon which the opinions and interpretations have been made. Opinions and interpretations are clearly noted as such and where applicable, a comment should be added suggesting that the client verify the opinion or interpretation with their regulator.

## 25.5 Environmental Testing Obtained From Subcontractors

If the laboratory is not able to provide the client the requested analysis, the samples would be subcontracted following the procedures outlined in the Corporate SOP on Subcontracting (SOP No. CA-L-S-002).

Data reported from analyses performed by a subcontractor laboratory are clearly identified as such on the analytical report provided to the client. Results from a subcontract laboratory outside of TestAmerica are reported to the client on the subcontract laboratory's original report stationary and the report includes any accompanying documentation.

## 25.6 Client Confidentiality

In situations involving the transmission of environmental test results by telephone, facsimile or other electronic means, client confidentiality must be maintained.

TestAmerica will not intentionally divulge to any person (other than the Client or any other person designated by the Client in writing) any information regarding the services provided by TestAmerica or any information disclosed to TestAmerica by the Client. Furthermore, information known to be potentially endangering to national security or an entity's proprietary rights will not be released.

**Note:** This shall not apply to the extent that the information is required to be disclosed by TestAmerica under the compulsion of legal process. TestAmerica will, to the extent feasible, provide reasonable notice to the client before disclosing the information.

**Note:** Authorized representatives of an accrediting authority are permitted to make copies of any analyses or records relevant to the accreditation process, and copies may be removed from the laboratory for purposes of assessment.

**25.6.1** Report deliverable formats are discussed with each new client. If a client requests that reports be faxed or e-mailed, the reports are faxed with a cover sheet or e-mailed with the following note that includes a confidentiality statement similar to the following:

*This material is intended only for the use of the individual(s) or entity to whom it is addressed, and may contain information that is privileged and confidential. If you are not the intended recipient, or the employee or agent responsible for delivering this material to the intended recipient, you are hereby notified that any dissemination, distribution or copying of this communication is strictly prohibited. If you have received this communication in error, please notify us immediately by telephone at the 1-800-765-0980 (or for e-mails: please notify us immediately by e-mail or by phone (1-800-765-0980) and delete this material from any computer).*

## 25.7 Format of Reports

The format of reports is designed to accommodate each type of environmental test carried out and to minimize the possibility of misunderstanding or misuse.

## 25.8 Amendments to Test Reports

Corrections, additions, or deletions to reports are only made when justification arises through supplemental documentation. Justification is documented using the laboratory's corrective action system (refer to Section 12).

The revised report is retained on the Archive data server, as is the original report. The revised report is stored in the Archive data server under the job number followed by "Rev#".

When the report is re-issued, a notation of "revised report "is placed on the cover/signature page of the report *or at the top of the narrative page* with a brief explanation of reason for the re-issue and a reference back to the last final report generated. *For Example*: *Report was revised on 11/3/08 to include toluene in sample NQA1504 per client's request.*

## 25.9 Policies on Client Requests for Amendments

### 25.9.1 Policy on Data Omissions or Reporting Limit Increases

Fundamentally, our policy is simply to not omit previously reported results (including data qualifiers) or to not raise reporting limits and report sample results as ND. This policy has few exceptions. Exceptions are:

- Laboratory error.
- Sample identification is indeterminate (confusion between COC and sample labels).
- An incorrect analysis (not analyte) was requested (e.g., COC lists 8315 but client wanted 8310). A written request for the change is required.
- Incorrect limits reported based on regulatory requirements.
- The requested change has absolutely *no possible* impact on the interpretation of the analytical results and there is *no possibility* of the change being interpreted as misrepresentation by anyone inside or outside of our company.

### 25.9.2 Multiple Reports

TestAmerica does not issue multiple reports for the same work order where there is different information on each report (this does not refer to copies of the same report) unless required to meet regulatory needs and approved by QA.

## Appendix 1. Laboratory Floor Plan

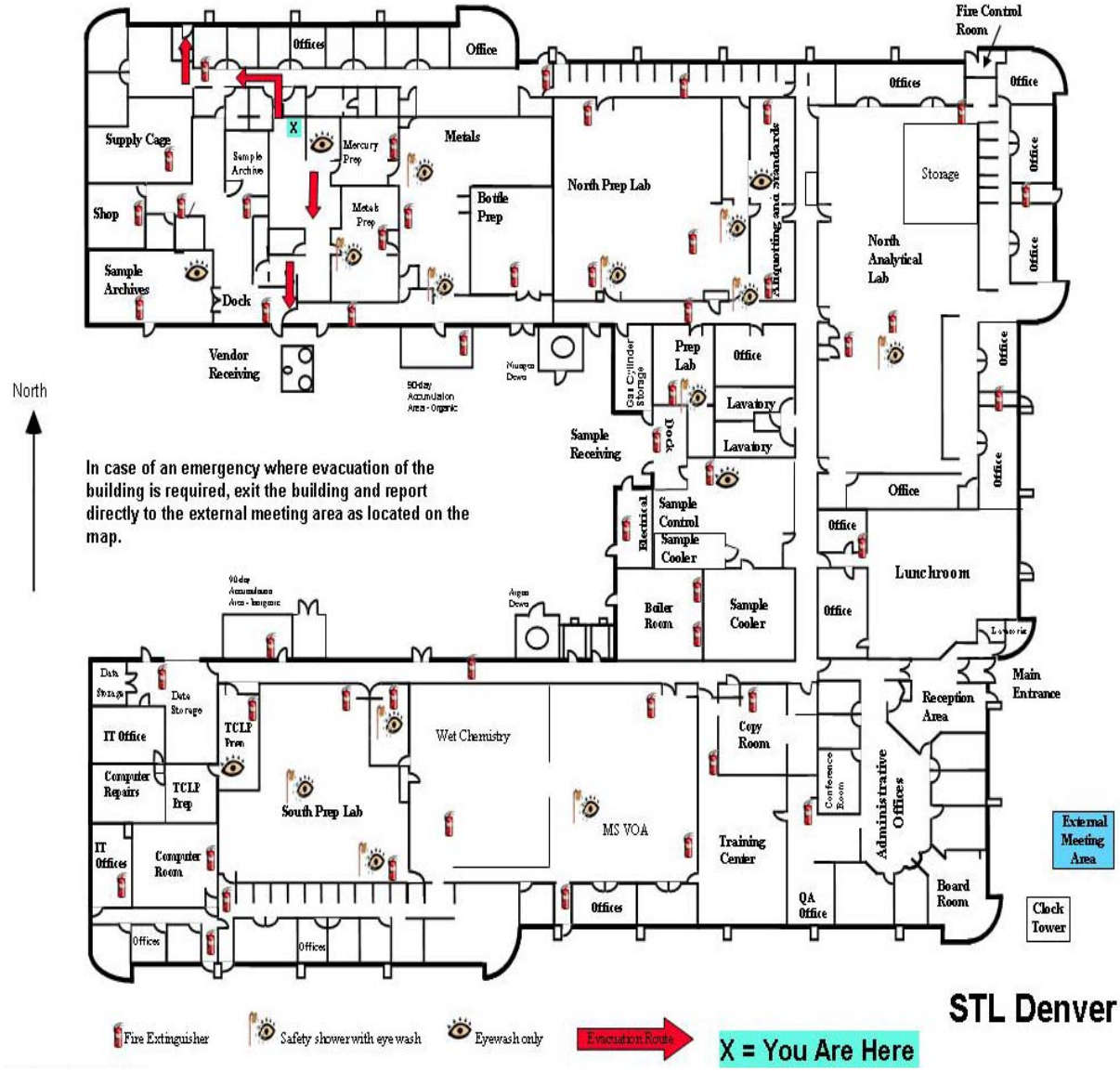

## Appendix 2. Glossary/Acronyms (EL-V1M2 Sec. 3.1)

**Glossary:**

**Acceptance Criteria:** Specified limits placed on characteristics of an item, process, or service defined in requirement documents. (ASQC)

**Accreditation:** The process by which an agency or organization evaluates and recognizes a laboratory as meeting certain predetermined qualifications or standards, thereby accrediting the laboratory.

**Accuracy:** The degree of agreement between an observed value and an accepted reference value. Accuracy includes a combination of random error (precision) and systematic error (bias) components which are due to sampling and analytical operations; a data quality indicator. (QAMS)

**Aliquot, aliquant:** A measured portion of a sample taken for analysis.

**Analyst:** The designated individual who performs the "hands-on" analytical methods and associated techniques and who is the one responsible for applying required laboratory practices and other pertinent quality controls to meet the required level of quality.

**Analytical Uncertainty:** A subset of Measurement Uncertainty that includes all laboratory activities performed as part of the analysis. (TNI)

**Assessment:** The evaluation process used to measure or establish the performance, effectiveness, and conformance of an organization and/or its systems to defined criteria (to the standards and requirements of laboratory accreditation). (TNI)

**Audit:** A systematic and independent examination of facilities, equipment, personnel, training, procedures, record-keeping, data validation, data management, and reporting aspects of a system to determine whether QA/QC and technical activities are being conducted as planned and whether these activities will effectively achieve quality objectives. (TNI)

**Batch:** Environmental samples that are prepared and/or analyzed together with the same process and personnel, using the same lot(s) of reagents. A **preparation batch** is composed of one (1) to twenty (20) environmental samples of the same quality systems matrix, meeting the above mentioned criteria and with a maximum time between the start of processing of the first and last sample in the batch to be twenty-four (24) hours. An **analytical batch** is composed of prepared environmental samples (extracts, digestates or concentrates) which are analyzed together as a group. An analytical batch can include prepared samples originating from various quality system matrices and can exceed twenty (20) samples. (TNI)

**Bias:** The systematic or persistent distortion of a measurement process, which causes errors in one direction (i.e., the expected sample measurement is different from the sample's true value). (TNI)

**Blank:** A sample that has not been exposed to the analyzed sample stream in order to monitor contamination during sampling, transport, storage or analysis. The blank is subjected to the usual analytical and measurement process to establish a zero baseline or background value and is sometimes used to adjust or correct routine analytical results. (ASQC)

**Calibration:** A set of operations that establish, under specified conditions, the relationship between values of quantities indicated by a measuring instrument or measuring system, or values represented by a material measure or a reference material, and the corresponding values realized by standards. (TNI)

1) In calibration of support equipment the values realized by standards are established through the use of reference standards that are traceable to the International System of Units (SI).

2) In calibration according to methods, the values realized by standards are typically established through the use of Reference Materials that are either purchased by the laboratory with a certificate of analysis or purity, or prepared by the laboratory using support equipment that has been calibrated or verified to meet specifications.

**Calibration Curve:** The mathematical relationship between the known values, such as concentrations, of a series of calibration standards and their instrument response. (TNI)

**Calibration Standard:** A substance or reference material used to calibrate an instrument (QAMS)

**Certified Reference Material (CRM):** A reference material accompanied by certificate, having a value, measurement uncertainty, and stated metrological traceability chain to a national metrology institute. (TNI)

**Chain of Custody (COC) Form:** Record that documents the possession of the samples from the time of collection to receipt in the laboratory. This record generally includes: the number and types of containers; the mode of collection; the collector; time of collection; preservation; and requested analyses. (TNI)

**Compromised Samples:** Those samples which are improperly sampled, insufficiently documented (chain of custody and other sample records and/or labels), improperly preserved, collected in improper containers, or exceeding holding times when delivered to a laboratory. Under normal conditions, compromised samples are not analyzed. If emergency situation require analysis, the results must be appropriately qualified.

**Confidential Business Information (CBI):** Information that an organization designates as having the potential of providing a competitor with inappropriate insight into its management, operation or products. TNI and its representatives agree to safeguarding identified CBI and to maintain all information identified as such in full confidentiality.

**Confirmation:** Verification of the identity of a component through the use of an approach with a different scientific principle from the original method. These may include, but are not limited to Second Column Confirmation; Alternate wavelength; Derivatization; Mass spectral interpretation; Alternative detectors or Additional Cleanup procedures. (TNI)

**Conformance:** An affirmative indication or judgment that a product or service has met the requirements of the relevant specifications, contract, or regulation; also the state of meeting the requirements. (ANSI/ASQC E4-1994)

**Correction:** Actions necessary to correct or repair analysis specific non-conformances. The acceptance criteria for method specific QC and protocols as well as the associated corrective actions. The analyst will most frequently be the one to identify the need for this action as a result of calibration checks and QC sample analysis**.** No significant action is taken to change behavior, process or procedure.

**Corrective Action:** The action taken to eliminate the causes of an existing nonconformity, defect or other undesirable situation in order to prevent recurrence. (ISO 8402)

**Data Audit:** A qualitative and quantitative evaluation of the documentation and procedures associated with environmental measurements to verify that the resulting data re of acceptable quality (i.e., that they meet specified acceptance criteria).

**Data Reduction:** The process of transforming the number of data items by arithmetic or statistical calculations, standard curves, and concentration factors, and collation into a more useable form. (TNI)

**Deficiency:** An unauthorized deviation from acceptable procedures or practices, or a defect in an item. (ASQC)

**Demonstration of Capability:** A procedure to establish the ability of the analyst to generate analytical results of acceptable accuracy and precision. (TNI)

**Document Control:** The act of ensuring that documents (and revisions thereto) are proposed, reviewed for accuracy, approved for release by authorized personnel, distributed properly, and controlled to ensure use of the correct version at the location where the prescribed activity if performed. (ASQC)

**Duplicate Analyses:** The analyses or measurements of the variable of interest performed identically on two subsamples of the same sample. The results from duplicate analyses are used to evaluate analytical or measurement precision but not the precision of sampling, preservation or storage internal to the laboratory. (EPA-QAD)

**Equipment Blank:** Sample of analyte-free media which has been used to rinse common sampling equipment to check effectiveness of decontamination procedures.

**External Standard Calibration:** Calibrations for methods that do not utilize internal standards to compensate for changes in instrument conditions.

**Field Blank:** Blank prepared in the field by filing a clean container with pure de-ionized water and appropriate preservative, if any, for the specific sampling activity being undertaken (EPA OSWER)

**Field of Accreditation:** Those matrix, technology/method, and analyte combinations for which the accreditation body offers accreditation.

**Holding Times:** The maximum times that samples may be held prior to analyses and still be considered valid or not compromised. (40 CFR Part 136)

**Internal Standard:** A known amount of standard added to a test portion of a sample as a reference for evaluating and controlling the precision and bias of the applied analytical test method. (TNI)

**Internal Standard Calibration:** Calibrations for methods that utilize internal standards to compensate for changes in instrument conditions.

**Instrument Blank:** A clean sample (e.g., distilled water) processed through the instrumental steps of the measurement process; used to determine instrument contamination. (EPA-QAD)

**Instrument Detection Limit (IDL):** The minimum amount of a substance that can be measured with a specified degree of confidence that the amount is greater than zero using a specific instrument. The IDL is associated with the instrumental portion of a specific method only, and sample preparation steps are not considered in its derivation. The IDL is a statistical estimation at a specified confidence interval of the concentration at which the relative uncertainty is ± 100%. The IDL represents a range where qualitative detection occurs on a specific instrument. Quantitative results are not produced in this range.

**Laboratory Control Sample (however named, such as laboratory fortified blank, spiked blank, or QC check sample):** A sample matrix, free from the analytes of interest, spiked with verified known amounts of analytes or a material containing known and verified amounts of analytes, taken through all preparation and analysis steps of the procedure unless otherwise noted in a reference method. It is generally used to establish intra-laboratory or analyst specific precision and bias or to assess the performance of all or a portion of the measurement system.

An LCS shall be prepared at a minimum of 1 per batch of 20 or less samples per matrix type per sample extraction or preparation method except for analytes for which spiking solutions are not available such as total suspended solids, total dissolved solids, total volatile solids, total solids, pH, color, odor, temperature, dissolved oxygen or turbidity. The results of these samples shall be used to determine batch acceptance.

**Least Squares Regression (1st Order Curve):** The least squares regression is a mathematical calculation of a straight line over two axes. The y axis represents the instrument response (or Response ratio) of a standard or sample and the x axis represents the concentration. The regression calculation will generate a correlation coefficient (r) that is a measure of the "goodness of fit" of the regression line to the data. A value of 1.00 indicates a perfect fit. In order to be used for quantitative purposes, r must be greater than or equal to 0.99 for organics and 0.995 for inorganics.

**Limit(s) of Detection (LOD) [a.k.a., Method Detection Limit (MDL)]:** A laboratory's estimate of the minimum amount of an analyte in a given matrix that an analytical process can reliably detect in their facility. (TNI)

**LOD Verification [a.k.a., MDL Verification]:** A processed QC sample in the matrix of interest, spiked with the analyte at no more than 3X the LOD for single analyte tests and 4X the LOD for multiple analyte tests and processed through the entire analytical procedure.

**Limit(s) of Quantitation (LOQ) [a.k.a., Reporting Limit]:** The minimum levels, concentrations, or quantities of a target variable (e.g., target analyte) that can be reported with a specified degree of confidence. (TNI)

**(QS) Matrix:** The component or substrate that contains the analyte of interest. For purposes of batch and QC requirement determinations, the following matrix distinctions shall be used:

*Aqueous:* Any aqueous sample excluded from the definition of Drinking Water or Saline/Estuarine. Includes surface water, groundwater, effluents, and TCLP or other extracts.

*Drinking Water:* Any aqueous sample that has been designated as a potable or potential potable water source.

*Saline/Estuarine:* Any aqueous sample from an ocean or estuary, or other salt water source such as the Great Salt Lake.

*Non-Aqueous Liquid:* Any organic liquid with <15% settleable solids.

*Biological Tissue:* Any sample of a biological origin such as fish tissue, shellfish, or plant material. Such samples shall be grouped according to origin.

*Solids:* Includes soils, sediments, sludges, and other matrices with >15% settleable solids.

*Chemical Waste:* A product or by-product of an industrial process that results in a matrix not previously defined.

*Air & Emissions:* Whole gas or vapor samples including those contained in flexible or rigid wall containers and the extracted concentrated analytes of interest from a gas or vapor that are collected with a sorbant tube, impinger solution, filter, or other device. (TNI)

**Matrix Spike (spiked sample or fortified sample):** A sample prepared, taken through all sample preparation and analytical steps of the procedure unless otherwise noted in a referenced method, by adding a known amount of target analyte to a specified amount of sample for which an independent test result of target analyte concentration is available. Matrix spikes are used, for example, to determine the effect of the matrix on a method's recovery efficiency.

**Matrix Spike Duplicate (spiked sample or fortified sample duplicate):** A replicate matrix spike prepared and analyzed to obtain a measure of the precision of the recovery for each analyte.

**Method Blank:** A sample of a matrix similar to the batch of associated samples (when available) that is free from the analytes of interest and is processed simultaneously with and under the same conditions as samples through all steps of the analytical procedures, and in which no target analytes or interferences are present at concentrations that impact the analytical results for sample analyses.

**Method Detection Limit:** The minimum concentration of a substance (an analyte) that can be measured and reported with 99% confidence that the analyte concentration is greater than zero and is determined from analysis of a sample in a given matrix containing the analyte. (40 CFR Part 136, Appendix B)

**Negative Control:** Measures taken to ensure that a test, its components, or the environment do not cause undesired effects, or produce incorrect test results.

**Non-conformance:** An indication, judgment, or state of not having met the requirements of the relevant specifications, contract, or regulation.

**Performance Audit:** The routine comparison of independently obtained qualitative and quantitative measurement system data with routinely obtained data in order to evaluate the proficiency of an analyst or laboratory.

**Positive Control:** Measures taken to ensure that a test and/or its components are working properly and producing correct or expected results from positive test subjects.

**Precision:** The degree to which a set of observations or measurements of the same property, obtained under similar conditions, conform to themselves; a data quality indicator. Precision is usually expressed as standard deviation, variance or range, in either absolute or relative terms. (TNI)

**Preservation:** Any conditions under which a sample must be kept in order to maintain chemical and/or biological integrity prior to analysis. (TNI)

**Proficiency Testing:** A means of evaluating a laboratory's performance under controlled conditions relative to a given set of criteria through analysis of unknown samples provided by an external source. (TNI)

**Proficiency Testing Program:** The aggregate of providing rigorously controlled and standardized environmental samples to a laboratory for analysis, reporting of results, statistical evaluation of the results and the collective demographics and results summary of all participating laboratories. (TNI)

**Proficiency Test Sample (PT):** A sample, the composition of which is unknown to the laboratory and is provided to test whether the laboratory can produce analytical results within specified acceptance criteria. (TNI)

**Quality Assurance:** An integrated system of management activities involving planning, implementation, assessment, reporting and quality improvement to ensure that a process, item, or service is of the type of quality needed and expected by the client. (TNI)

**Quality Assurance [Project] Plan (QAPP):** A formal document describing the detailed quality control procedures by which the quality requirements defined for the data and decisions pertaining to a specific project are to be achieved. (EAP-QAD)

**Quality Control:** The overall system of technical activities that measures the attributes and performance of a process, item, or service against defined standards to verify that they meet the stated requirements established by the customer; operational techniques and activities that are used to fulfill requirements for quality; also the system of activities and checks used to ensure that measurement systems are maintained within prescribed limits, providing protection against “out of control” conditions and ensuring that the results are of acceptable quality. (TNI)

**Quality Control Sample:** A sample used to assess the performance of all or a portion of the measurement system. One of any number of samples, such as Certified Reference Materials, a quality system matrix fortified by spiking, or actual samples fortified by spiking, intended to demonstrate that a measurement system or activity is in control. (TNI)

**Quality Manual:** A document stating the management policies, objectives, principles, organizational structure and authority, responsibilities, accountability, and implementation of an agency, organization, or laboratory, to ensure the quality of its product and the utility of its product to its users. (TNI)

**Quality System:** A structured and documented management system describing the policies, objectives, principles, organizational authority, responsibilities, accountability, and implementation plan of an organization for ensuring quality in its work processes, products (items), and services. The quality system provides the framework for planning, implementing, and assessing work performed by the organization and for carrying out required QA and QC activities. (TNI)

**Raw Data:** The documentation generated during sampling and analysis. This documentation includes, but is not limited to, field notes, electronic data, magnetic tapes, untabulated sample results, QC sample results, print outs of chromatograms, instrument outputs, and handwritten records. (TNI)

**Record Retention:** The systematic collection, indexing and storing of documented information under secure conditions.

**Reference Material:** Material or substance one or more properties of which are sufficiently homogeneous and well established to be used for the calibration of an apparatus, the assessment of a measurement method, or for assigning values to materials. (TNI)

**Reference Standard:** Standard used for the calibration of working measurement standards in a given organization or a given location. (TNI)

**Sampling:** Activity related to obtaining a representative sample of the object of conformity assessment, according to a procedure.

**Second Order Polynomial Curve (Quadratic):** The 2nd order curves are a mathematical calculation of a slightly curved line over two axis. The y axis represents the instrument response (or Response ratio) of a standard or sample and the x axis represents the concentration. The 2nd order regression will generate a coefficient of determination (COD or $r^2$) that is a measure of the "goodness of fit" of the quadratic curvature the data. A value of 1.00 indicates a perfect fit. In order to be used for quantitative purposes, $r^2$ must be greater than or equal to 0.99.

**Selectivity:** The ability to analyze, distinguish, and determine a specific analyte or parameter from another component that may be a potential interferent or that may behave similarly to the target analyte or parameter within the measurement system. (TNI)

**Sensitivity:** The capability of a method or instrument to discriminate between measurement responses representing different levels (e.g., concentrations) of a variable of interest. (TNI)

**Spike:** A known mass of target analyte added to a blank, sample or sub-sample; used to determine recovery efficiency or for other quality control purposes.

**Standard:** The document describing the elements of laboratory accreditation that has been developed and established within the consensus principles of standard setting and meets the approval requirements of standard adoption organizations procedures and policies. (TNI)

**Standard Operating Procedures (SOPs):** A written document which details the method for an operation, analysis, or action, with thoroughly prescribed techniques and steps. SOPs are officially approved as the methods for performing certain routine or repetitive tasks. (TNI)

**Storage Blank:** A blank matrix stored with field samples of a similar matrix (volatiles only) that measures storage contribution to any source of contamination.

**Surrogate:** A substance with properties that mimic the analyte of interest. It is unlikely to be found in environment samples and is added to them for quality control purposes.

Surrogate compounds must be added to all samples, standards, and blanks, for all organic chromatography methods except when the matrix precludes its use or when a surrogate is not available. Poor surrogate recovery may indicate a problem with sample composition and shall be reported to the client whose sample produced poor recovery. (QAMS)

**Systems Audit (also Technical Systems Audit):** A thorough, systematic, qualitative on-site assessment of the facilities, equipment, personnel, training, procedures, record keeping, data validation, data management, and reporting aspects of a total measurement system. (EPA-QAD)

**Technical Manager:** A member of the staff of an environmental laboratory who exercises actual day-to-day supervision of laboratory operations for the appropriate fields of accreditation and reporting of results.

**Technology:** A specific arrangement of analytical instruments, detection systems, and/or preparation techniques.

**Traceability:** The ability to trace the history, application, or location of an entity by means of recorded identifications. In a calibration sense, traceability relates measuring equipment to national or international standards, primary standards, basic physical constants or properties, or reference materials. In a data collection sense, it relates calculations and data generated throughout the project back to the requirements for the quality of the project. (TNI)

**Trip Blank:** A blank matrix placed in a sealed container at the laboratory that is shipped, held unopened in the field, and returned to the laboratory in the shipping container with the field samples.

**Uncertainty:** A parameter associated with the result of a measurement that characterizes the dispersion of the value that could reasonably be attributed to the measured value.

## Acronyms:

CAR – Corrective Action Report
CCV – Continuing Calibration Verification
CF – Calibration Factor
CFR – Code of Federal Regulations
COC – Chain of Custody
DOC – Demonstration of Capability
DQO – Data Quality Objectives
DUP - Duplicate
EHS – Environment, Health and Safety
EPA – Environmental Protection Agency
GC - Gas Chromatography
GC/MS - Gas Chromatography/Mass Spectrometry
HPLC - High Performance Liquid Chromatography
ICP - Inductively Coupled Plasma Atomic Emission Spectroscopy
ICP/MS – ICP/Mass Spectrometry
ICV – Initial Calibration Verification
IDL – Instrument Detection Limit
IH – Industrial Hygiene
IS – Internal Standard
LCS – Laboratory Control Sample
LCSD – Laboratory Control Sample Duplicate
LIMS – Laboratory Information Management System
LOD – Limit of Detection
LOQ – Limit of Quantitation
MDL – Method Detection Limit
MDLCK – MDL Check Standard
MDLV – MDL Verification check standard
MRL – Method Reporting Limit Check Standard
MS – Matrix Spike
MSD – Matrix Spike Duplicate
MSDS - Material Safety Data Sheet
NELAP - National Environmental Laboratory Accreditation Program
PT – Performance Testing
QAM – Quality Assurance Manual
QA/QC – Quality Assurance / Quality Control
QAPP – Quality Assurance Project Plan

RF – Response Factor
RPD – Relative Percent Difference
RSD – Relative Standard Deviation
SD – Standard Deviation
SOP – Standard Operating Procedure
TAT – Turn-Around-Time
TNI – The NELAC Institute
VOA – Volatiles
VOC – Volatile Organic Compound

## Appendix 3. Laboratory Certifications, Accreditations, Validations

TestAmerica Denver maintains accreditations, certifications, and approvals with numerous state and national entities. Programs vary but may include on-site audits, reciprocal agreements with another entity, performance testing evaluations, review of the QA Manual, Standard Operating Procedures, Method Detection Limits, training records, etc. At the time of this QA Manual revision, the laboratory has accreditation/certification/licensing with the following organizations:

| Lab ID | Program | Authority |
|---|---|---|
| 2907.01 | DoD ELAP | A2LA |
| | ISO/IEC 17025 | A2LA |
| E87667 | NELAC Primary AB | Florida |
| 200017 | NELAC Secondary AB | Illinois |
| E-10166 | NELAC Secondary AB | Kansas |
| 30785 | NELAC Secondary AB | Louisiana |
| | NELAC Secondary AB | New Hampshire |
| | NELAC Secondary AB | New Jersey |
| 11964 | NELAC Secondary AB | New York |
| CO200001 | NELAC Secondary AB | Oregon |
| 68-00664 | NELAC Secondary AB | Pennsylvania |
| T104704183-08-TX | NELAC Secondary AB | Texas |
| QUAN5 | NELAC Secondary AB | Utah |
| | State Program | Alabama |
| UST-30 | State Program | Alaska |
| AZ0713 | State Program | Arizona |
| 88-0687 | State Program | Arkansas |
| 2513 | State Program | California |
| N/A | State Program | Colorado |
| 486-03 | State Program-RAM license | Colorado |
| PH-0686 | State Program | Connecticut |
| N/A | State Program | Georgia |
| CO00026 | State Program | Idaho |
| 370 | State Program | Iowa |
| CO0002 | State Program | Maine |
| 268 | State Program | Maryland |
| 8-999-405 | State Program | Minnesota |
| CO0026 | State Program | Nevada |
| N/A | State Program | New Mexico |
| 358 | State Program | North Carolina |
| R-034 | State Program | North Dakota |
| 8614 | State Program | Oklahoma |
| 72002 | State Program | South Carolina |
| TN02944 | State Program | Tennessee |
| C1284 | State Program | Washington |
| 354 | State Program | West Virginia |
| 999615430 | State Program | Wisconsin |
| P330-08-00036 | USDA | |

The certificates and parameter lists (which may differ) are available, upon request, from a laboratory representative. for each organization may be found on the corporate web site, the laboratory's public server, the final report review table, and in the following offices: QA, marketing, and project management.

# APPENDIX E

## DUMPStat Statistical Analytical Results

# Background Groundwater Analytical Results and Prediction Limits for Shallow (Silt and Clay) Compliance Monitoring Wells

**MW-12A**

# Table 1

## Upgradient Data

| Constituent | Units | Well | Date | | Result | |
|---|---|---|---|---|---|---|
| Alkalinity, bicarbonate (as caco3) | mg/L | MW-12A | 12/28/1995 | | 55.0000 | |
| Alkalinity, bicarbonate (as caco3) | mg/L | MW-12A | 03/29/1996 | | 57.2000 | |
| Alkalinity, bicarbonate (as caco3) | mg/L | MW-12A | 05/24/1996 | | 53.8000 | |
| Alkalinity, bicarbonate (as caco3) | mg/L | MW-12A | 09/30/1996 | | 46.0000 | |
| Alkalinity, bicarbonate (as caco3) | mg/L | MW-12A | 01/14/1997 | | 28.1000 | |
| Alkalinity, bicarbonate (as caco3) | mg/L | MW-12A | 04/02/1997 | | 34.2000 | |
| Alkalinity, bicarbonate (as caco3) | mg/L | MW-12A | 05/20/1997 | | 44.9000 | |
| Alkalinity, bicarbonate (as caco3) | mg/L | MW-12A | 09/10/1997 | | 42.9000 | |
| Alkalinity, bicarbonate (as caco3) | mg/L | MW-12A | 12/22/1997 | | 36.2000 | |
| Alkalinity, bicarbonate (as caco3) | mg/L | MW-12A | 03/18/1998 | | 43.8000 | |
| Alkalinity, bicarbonate (as caco3) | mg/L | MW-12A | 04/30/1998 | | 42.6000 | |
| Alkalinity, bicarbonate (as caco3) | mg/L | MW-12A | 08/21/1998 | | 44.0000 | |
| Alkalinity, bicarbonate (as caco3) | mg/L | MW-12A | 12/17/1998 | | 38.0000 | |
| Alkalinity, bicarbonate (as caco3) | mg/L | MW-12A | 09/16/1999 | | 41.2000 | |
| Alkalinity, bicarbonate (as caco3) | mg/L | MW-12A | 02/08/2000 | | 32.1000 | |
| Alkalinity, bicarbonate (as caco3) | mg/L | MW-12A | 05/30/2000 | | 37.7000 | |
| Alkalinity, bicarbonate (as caco3) | mg/L | MW-12A | 04/21/2004 | | 41.0000 | |
| Alkalinity, bicarbonate (as caco3) | mg/L | MW-12A | 11/09/2004 | | 42.0000 | |
| Alkalinity, bicarbonate (as caco3) | mg/L | MW-12A | 05/24/2005 | | 53.0000 | |
| Alkalinity, bicarbonate (as caco3) | mg/L | MW-12A | 10/26/2005 | | 50.0000 | |
| Alkalinity, bicarbonate (as caco3) | mg/L | MW-12A | 05/09/2006 | | 52.0000 | |
| Alkalinity, bicarbonate (as caco3) | mg/L | MW-12A | 10/17/2006 | | 53.0000 | |
| Alkalinity, bicarbonate (as caco3) | mg/L | MW-12A | 05/08/2007 | | 63.0000 | |
| Alkalinity, bicarbonate (as caco3) | mg/L | MW-12A | 11/07/2007 | | 58.0000 | |
| Alkalinity, bicarbonate (as caco3) | mg/L | MW-12A | 05/20/2008 | | 67.0000 | |
| Alkalinity, bicarbonate (as caco3) | mg/L | MW-12A | 11/11/2008 | | 62.0000 | |
| Alkalinity, bicarbonate (as caco3) | mg/L | MW-12A | 05/05/2009 | | 62.0000 | |
| Alkalinity, bicarbonate (as caco3) | mg/L | MW-12A | 11/17/2009 | | 51.0000 | |
| Alkalinity, bicarbonate (as caco3) | mg/L | MW-12A | 04/20/2010 | | 69.0000 | |
| Alkalinity, bicarbonate (as caco3) | mg/L | MW-12A | 10/05/2010 | | 63.0000 | |
| Alkalinity, bicarbonate (as caco3) | mg/L | MW-12A | 04/14/2011 | | 73.0000 | |
| Alkalinity, bicarbonate (as caco3) | mg/L | MW-12A | 11/02/2011 | | 66.0000 | |
| Alkalinity, bicarbonate (as caco3) | mg/L | MW-12A | 05/02/2012 | | 74.0000 | |
| Alkalinity, bicarbonate (as caco3) | mg/L | MW-12A | 11/13/2012 | | 62.0000 | |
| Chloride | mg/L | MW-12A | 12/28/1995 | | 7.0000 | |
| Chloride | mg/L | MW-12A | 03/29/1996 | | 5.5000 | |
| Chloride | mg/L | MW-12A | 05/24/1996 | | 10.4000 | |
| Chloride | mg/L | MW-12A | 09/30/1996 | | 11.3000 | |
| Chloride | mg/L | MW-12A | 01/14/1997 | | 6.9000 | |
| Chloride | mg/L | MW-12A | 04/02/1997 | | 14.4000 | |
| Chloride | mg/L | MW-12A | 05/20/1997 | | 16.7000 | |
| Chloride | mg/L | MW-12A | 09/10/1997 | | 20.6000 | |
| Chloride | mg/L | MW-12A | 12/22/1997 | | 23.4000 | |
| Chloride | mg/L | MW-12A | 03/18/1998 | | 19.4000 | |

* - Outlier for that well and constituent.
ND = Not detected, result = detection limit.

# Table 1

## Upgradient Data

| Constituent | Units | Well | Date | | Result | |
|---|---|---|---|---|---|---|
| Chloride | mg/L | MW-12A | 04/30/1998 | | 37.0000 | |
| Chloride | mg/L | MW-12A | 08/21/1998 | | 50.8000 | |
| Chloride | mg/L | MW-12A | 12/17/1998 | | 39.7000 | |
| Chloride | mg/L | MW-12A | 09/16/1999 | | 52.4000 | |
| Chloride | mg/L | MW-12A | 02/08/2000 | | 48.0000 | |
| Chloride | mg/L | MW-12A | 05/30/2000 | | 61.0000 | |
| Chloride | mg/L | MW-12A | 11/07/2000 | | 46.7000 | |
| Chloride | mg/L | MW-12A | 04/25/2001 | | 60.3000 | |
| Chloride | mg/L | MW-12A | 11/07/2001 | | 55.7000 | |
| Chloride | mg/L | MW-12A | 04/10/2002 | | 23.6000 | |
| Chloride | mg/L | MW-12A | 10/09/2002 | | 36.0000 | |
| Chloride | mg/L | MW-12A | 05/14/2003 | | 22.0000 | |
| Chloride | mg/L | MW-12A | 11/20/2003 | | 27.0000 | |
| Chloride | mg/L | MW-12A | 04/21/2004 | | 25.0000 | |
| Chloride | mg/L | MW-12A | 11/09/2004 | | 30.0000 | |
| Chloride | mg/L | MW-12A | 05/24/2005 | | 26.0000 | |
| Chloride | mg/L | MW-12A | 10/26/2005 | | 26.0000 | |
| Chloride | mg/L | MW-12A | 05/09/2006 | | 23.0000 | |
| Chloride | mg/L | MW-12A | 10/17/2006 | | 25.0000 | |
| Chloride | mg/L | MW-12A | 05/08/2007 | | 20.0000 | |
| Chloride | mg/L | MW-12A | 11/07/2007 | | 22.0000 | |
| Chloride | mg/L | MW-12A | 05/20/2008 | | 19.0000 | |
| Chloride | mg/L | MW-12A | 11/11/2008 | | 20.0000 | |
| Chloride | mg/L | MW-12A | 05/05/2009 | | 16.0000 | |
| Chloride | mg/L | MW-12A | 11/17/2009 | | 23.0000 | |
| Chloride | mg/L | MW-12A | 04/20/2010 | | 38.0000 | |
| Chloride | mg/L | MW-12A | 10/05/2010 | | 31.0000 | |
| Chloride | mg/L | MW-12A | 04/14/2011 | | 34.0000 | |
| Chloride | mg/L | MW-12A | 11/02/2011 | | 28.0000 | |
| Chloride | mg/L | MW-12A | 05/02/2012 | | 31.0000 | |
| Chloride | mg/L | MW-12A | 11/13/2012 | | 31.0000 | |
| Magnesium, dissolved | mg/L | MW-12A | 12/28/1995 | | 4.4000 | |
| Magnesium, dissolved | mg/L | MW-12A | 03/29/1996 | | 4.8000 | |
| Magnesium, dissolved | mg/L | MW-12A | 05/24/1996 | | 5.5000 | |
| Magnesium, dissolved | mg/L | MW-12A | 09/30/1996 | | 5.3000 | |
| Magnesium, dissolved | mg/L | MW-12A | 01/14/1997 | | 1.9000 | * |
| Magnesium, dissolved | mg/L | MW-12A | 04/02/1997 | | 5.6000 | |
| Magnesium, dissolved | mg/L | MW-12A | 05/20/1997 | | 6.0000 | |
| Magnesium, dissolved | mg/L | MW-12A | 09/10/1997 | | 6.8000 | |
| Magnesium, dissolved | mg/L | MW-12A | 12/22/1997 | | 5.9000 | |
| Magnesium, dissolved | mg/L | MW-12A | 03/18/1998 | | 5.8000 | |
| Magnesium, dissolved | mg/L | MW-12A | 04/30/1998 | | 8.6000 | |
| Magnesium, dissolved | mg/L | MW-12A | 08/21/1998 | | 10.1000 | |
| Magnesium, dissolved | mg/L | MW-12A | 12/17/1998 | | 7.8900 | |

* - Outlier for that well and constituent.
ND = Not detected, result = detection limit.

# Table 1

## Upgradient Data

| Constituent | Units | Well | Date | | Result | |
|---|---|---|---|---|---|---|
| Magnesium, dissolved | mg/L | MW-12A | 09/16/1999 | | 9.7000 | |
| Magnesium, dissolved | mg/L | MW-12A | 02/08/2000 | | 8.6000 | |
| Magnesium, dissolved | mg/L | MW-12A | 05/30/2000 | | 9.7000 | |
| Magnesium, dissolved | mg/L | MW-12A | 11/07/2000 | | 10.5000 | |
| Magnesium, dissolved | mg/L | MW-12A | 04/25/2001 | | 10.4000 | |
| Magnesium, dissolved | mg/L | MW-12A | 11/07/2001 | | 10.2000 | |
| Magnesium, dissolved | mg/L | MW-12A | 04/10/2002 | | 5.8000 | |
| Magnesium, dissolved | mg/L | MW-12A | 10/09/2002 | | 7.9000 | |
| Magnesium, dissolved | mg/L | MW-12A | 05/14/2003 | | 5.9000 | |
| Magnesium, dissolved | mg/L | MW-12A | 11/20/2003 | | 7.5000 | |
| Magnesium, dissolved | mg/L | MW-12A | 04/21/2004 | | 5.9000 | |
| Magnesium, dissolved | mg/L | MW-12A | 11/09/2004 | | 6.6000 | |
| Magnesium, dissolved | mg/L | MW-12A | 05/24/2005 | | 7.0000 | |
| Magnesium, dissolved | mg/L | MW-12A | 10/26/2005 | | 7.4000 | |
| Magnesium, dissolved | mg/L | MW-12A | 05/09/2006 | | 6.4000 | |
| Magnesium, dissolved | mg/L | MW-12A | 10/17/2006 | | 7.2000 | |
| Magnesium, dissolved | mg/L | MW-12A | 05/08/2007 | | 7.2000 | |
| Magnesium, dissolved | mg/L | MW-12A | 11/07/2007 | | 7.8000 | |
| Magnesium, dissolved | mg/L | MW-12A | 05/20/2008 | | 7.5000 | |
| Magnesium, dissolved | mg/L | MW-12A | 11/11/2008 | | 7.7000 | |
| Magnesium, dissolved | mg/L | MW-12A | 05/05/2009 | | 6.7000 | |
| Magnesium, dissolved | mg/L | MW-12A | 11/17/2009 | | 6.9000 | |
| Magnesium, dissolved | mg/L | MW-12A | 04/20/2010 | | 9.6000 | |
| Magnesium, dissolved | mg/L | MW-12A | 10/05/2010 | | 9.5000 | |
| Magnesium, dissolved | mg/L | MW-12A | 04/14/2011 | | 8.3000 | |
| Magnesium, dissolved | mg/L | MW-12A | 11/02/2011 | | 8.0000 | |
| Magnesium, dissolved | mg/L | MW-12A | 05/02/2012 | | 8.2000 | |
| Magnesium, dissolved | mg/L | MW-12A | 11/13/2012 | | 9.0000 | |
| Potassium, dissolved | mg/L | MW-12A | 12/28/1995 | | 1.1000 | |
| Potassium, dissolved | mg/L | MW-12A | 03/29/1996 | | 0.8300 | |
| Potassium, dissolved | mg/L | MW-12A | 05/24/1996 | | 0.7100 | |
| Potassium, dissolved | mg/L | MW-12A | 09/30/1996 | | 0.5900 | |
| Potassium, dissolved | mg/L | MW-12A | 01/14/1997 | | 0.6200 | |
| Potassium, dissolved | mg/L | MW-12A | 04/02/1997 | | 0.7300 | |
| Potassium, dissolved | mg/L | MW-12A | 05/20/1997 | ND | 0.1500 | |
| Potassium, dissolved | mg/L | MW-12A | 09/10/1997 | | 0.1500 | |
| Potassium, dissolved | mg/L | MW-12A | 12/22/1997 | | 0.7500 | |
| Potassium, dissolved | mg/L | MW-12A | 03/18/1998 | | 0.4900 | |
| Potassium, dissolved | mg/L | MW-12A | 04/30/1998 | | 0.8800 | |
| Potassium, dissolved | mg/L | MW-12A | 08/21/1998 | | 0.4400 | |
| Potassium, dissolved | mg/L | MW-12A | 12/17/1998 | ND | 2.0000 | * |
| Potassium, dissolved | mg/L | MW-12A | 09/16/1999 | | 0.3700 | |
| Potassium, dissolved | mg/L | MW-12A | 02/08/2000 | | 0.5100 | |
| Potassium, dissolved | mg/L | MW-12A | 05/30/2000 | | 0.5500 | |

* - Outlier for that well and constituent.
ND = Not detected, result = detection limit.

# Table 1

## Upgradient Data

| Constituent | Units | Well | Date | | Result | |
|---|---|---|---|---|---|---|
| Potassium, dissolved | mg/L | MW-12A | 11/07/2000 | ND | 0.5000 | |
| Potassium, dissolved | mg/L | MW-12A | 04/25/2001 | ND | 0.5000 | |
| Potassium, dissolved | mg/L | MW-12A | 11/07/2001 | ND | 0.5000 | |
| Potassium, dissolved | mg/L | MW-12A | 04/10/2002 | ND | 0.5000 | |
| Potassium, dissolved | mg/L | MW-12A | 10/09/2002 | ND | 0.5000 | |
| Potassium, dissolved | mg/L | MW-12A | 05/14/2003 | ND | 0.5000 | |
| Potassium, dissolved | mg/L | MW-12A | 11/20/2003 | ND | 0.5000 | |
| Potassium, dissolved | mg/L | MW-12A | 04/21/2004 | ND | 0.5000 | |
| Potassium, dissolved | mg/L | MW-12A | 11/09/2004 | | 0.6100 | |
| Potassium, dissolved | mg/L | MW-12A | 05/24/2005 | ND | 0.5000 | |
| Potassium, dissolved | mg/L | MW-12A | 10/26/2005 | ND | 0.5000 | |
| Potassium, dissolved | mg/L | MW-12A | 05/09/2006 | | 0.5400 | |
| Potassium, dissolved | mg/L | MW-12A | 10/17/2006 | ND | 0.5000 | |
| Potassium, dissolved | mg/L | MW-12A | 05/08/2007 | | 0.5000 | |
| Potassium, dissolved | mg/L | MW-12A | 11/07/2007 | ND | 0.5000 | |
| Potassium, dissolved | mg/L | MW-12A | 05/20/2008 | | 0.5600 | |
| Potassium, dissolved | mg/L | MW-12A | 11/11/2008 | | 0.7600 | |
| Potassium, dissolved | mg/L | MW-12A | 05/05/2009 | | 0.5300 | |
| Potassium, dissolved | mg/L | MW-12A | 11/17/2009 | | 0.6100 | |
| Potassium, dissolved | mg/L | MW-12A | 04/20/2010 | | 0.5700 | |
| Potassium, dissolved | mg/L | MW-12A | 10/05/2010 | ND | 0.5000 | |
| Potassium, dissolved | mg/L | MW-12A | 04/14/2011 | | 0.7300 | |
| Potassium, dissolved | mg/L | MW-12A | 11/02/2011 | ND | 0.5000 | |
| Potassium, dissolved | mg/L | MW-12A | 05/02/2012 | | 0.5300 | |
| Potassium, dissolved | mg/L | MW-12A | 11/13/2012 | | 0.6500 | |
| Sodium, dissolved | mg/L | MW-12A | 12/28/1995 | | 15.9000 | |
| Sodium, dissolved | mg/L | MW-12A | 03/29/1996 | | 16.9000 | |
| Sodium, dissolved | mg/L | MW-12A | 05/24/1996 | | 16.9000 | |
| Sodium, dissolved | mg/L | MW-12A | 09/30/1996 | | 11.9000 | |
| Sodium, dissolved | mg/L | MW-12A | 01/14/1997 | | 7.5000 | |
| Sodium, dissolved | mg/L | MW-12A | 04/02/1997 | | 11.2000 | |
| Sodium, dissolved | mg/L | MW-12A | 05/20/1997 | | 8.9000 | |
| Sodium, dissolved | mg/L | MW-12A | 09/10/1997 | | 9.1000 | |
| Sodium, dissolved | mg/L | MW-12A | 12/22/1997 | | 11.3000 | |
| Sodium, dissolved | mg/L | MW-12A | 03/18/1998 | | 11.1000 | |
| Sodium, dissolved | mg/L | MW-12A | 04/30/1998 | | 13.7000 | |
| Sodium, dissolved | mg/L | MW-12A | 08/21/1998 | | 12.4000 | |
| Sodium, dissolved | mg/L | MW-12A | 12/17/1998 | | 11.7000 | |
| Sodium, dissolved | mg/L | MW-12A | 09/16/1999 | | 11.9000 | |
| Sodium, dissolved | mg/L | MW-12A | 02/08/2000 | | 12.7000 | |
| Sodium, dissolved | mg/L | MW-12A | 05/30/2000 | | 12.9000 | |
| Sodium, dissolved | mg/L | MW-12A | 11/07/2000 | | 13.3000 | |
| Sodium, dissolved | mg/L | MW-12A | 04/25/2001 | | 13.0000 | |
| Sodium, dissolved | mg/L | MW-12A | 11/07/2001 | | 12.9000 | |

* - Outlier for that well and constituent.
ND = Not detected, result = detection limit.

# Table 1

## Upgradient Data

| Constituent | Units | Well | Date | | Result | |
|---|---|---|---|---|---|---|
| Sodium, dissolved | mg/L | MW-12A | 04/10/2002 | | 10.2000 | |
| Sodium, dissolved | mg/L | MW-12A | 10/09/2002 | | 11.0000 | |
| Sodium, dissolved | mg/L | MW-12A | 05/14/2003 | | 11.0000 | |
| Sodium, dissolved | mg/L | MW-12A | 11/20/2003 | | 11.0000 | |
| Sodium, dissolved | mg/L | MW-12A | 04/21/2004 | | 11.0000 | |
| Sodium, dissolved | mg/L | MW-12A | 11/09/2004 | | 13.0000 | |
| Sodium, dissolved | mg/L | MW-12A | 05/24/2005 | | 14.0000 | |
| Sodium, dissolved | mg/L | MW-12A | 10/26/2005 | | 12.0000 | |
| Sodium, dissolved | mg/L | MW-12A | 05/09/2006 | | 12.0000 | |
| Sodium, dissolved | mg/L | MW-12A | 10/17/2006 | | 11.0000 | |
| Sodium, dissolved | mg/L | MW-12A | 05/08/2007 | | 13.0000 | |
| Sodium, dissolved | mg/L | MW-12A | 11/07/2007 | | 13.0000 | |
| Sodium, dissolved | mg/L | MW-12A | 05/20/2008 | | 14.0000 | |
| Sodium, dissolved | mg/L | MW-12A | 11/11/2008 | | 15.0000 | |
| Sodium, dissolved | mg/L | MW-12A | 05/05/2009 | | 13.0000 | |
| Sodium, dissolved | mg/L | MW-12A | 11/17/2009 | | 15.0000 | |
| Sodium, dissolved | mg/L | MW-12A | 04/20/2010 | | 19.0000 | |
| Sodium, dissolved | mg/L | MW-12A | 10/05/2010 | | 14.0000 | |
| Sodium, dissolved | mg/L | MW-12A | 04/14/2011 | | 20.0000 | |
| Sodium, dissolved | mg/L | MW-12A | 11/02/2011 | | 14.0000 | |
| Sodium, dissolved | mg/L | MW-12A | 05/02/2012 | | 20.0000 | |
| Sodium, dissolved | mg/L | MW-12A | 11/13/2012 | | 20.0000 | |
| Total dissolved solids (tds) | mg/L | MW-12A | 12/28/1995 | | 169.0000 | |
| Total dissolved solids (tds) | mg/L | MW-12A | 03/29/1996 | ND | 10.0000 | * |
| Total dissolved solids (tds) | mg/L | MW-12A | 05/24/1996 | | 139.0000 | |
| Total dissolved solids (tds) | mg/L | MW-12A | 09/30/1996 | | 152.0000 | |
| Total dissolved solids (tds) | mg/L | MW-12A | 01/14/1997 | | 76.0000 | |
| Total dissolved solids (tds) | mg/L | MW-12A | 04/02/1997 | | 130.0000 | |
| Total dissolved solids (tds) | mg/L | MW-12A | 05/20/1997 | | 108.0000 | |
| Total dissolved solids (tds) | mg/L | MW-12A | 09/10/1997 | | 161.0000 | |
| Total dissolved solids (tds) | mg/L | MW-12A | 12/22/1997 | | 122.0000 | |
| Total dissolved solids (tds) | mg/L | MW-12A | 03/18/1998 | | 116.0000 | |
| Total dissolved solids (tds) | mg/L | MW-12A | 04/30/1998 | | 170.0000 | |
| Total dissolved solids (tds) | mg/L | MW-12A | 08/21/1998 | | 205.0000 | |
| Total dissolved solids (tds) | mg/L | MW-12A | 12/17/1998 | | 139.0000 | |
| Total dissolved solids (tds) | mg/L | MW-12A | 09/16/1999 | | 229.0000 | |
| Total dissolved solids (tds) | mg/L | MW-12A | 02/08/2000 | | 128.0000 | |
| Total dissolved solids (tds) | mg/L | MW-12A | 05/30/2000 | | 221.0000 | |
| Total dissolved solids (tds) | mg/L | MW-12A | 11/07/2000 | | 194.0000 | |
| Total dissolved solids (tds) | mg/L | MW-12A | 04/25/2001 | | 240.0000 | |
| Total dissolved solids (tds) | mg/L | MW-12A | 11/07/2001 | | 206.0000 | |
| Total dissolved solids (tds) | mg/L | MW-12A | 04/10/2002 | | 209.0000 | |
| Total dissolved solids (tds) | mg/L | MW-12A | 10/09/2002 | | 160.0000 | |
| Total dissolved solids (tds) | mg/L | MW-12A | 05/14/2003 | | 130.0000 | |

* - Outlier for that well and constituent.
ND = Not detected, result = detection limit.

# Table 1

## Upgradient Data

| Constituent | Units | Well | Date | | Result | |
|---|---|---|---|---|---|---|
| Total dissolved solids (tds) | mg/L | MW-12A | 11/20/2003 | | 160.0000 | |
| Total dissolved solids (tds) | mg/L | MW-12A | 04/21/2004 | | 120.0000 | |
| Total dissolved solids (tds) | mg/L | MW-12A | 11/09/2004 | | 130.0000 | |
| Total dissolved solids (tds) | mg/L | MW-12A | 05/24/2005 | | 140.0000 | |
| Total dissolved solids (tds) | mg/L | MW-12A | 10/26/2005 | | 120.0000 | |
| Total dissolved solids (tds) | mg/L | MW-12A | 05/09/2006 | | 150.0000 | |
| Total dissolved solids (tds) | mg/L | MW-12A | 10/17/2006 | | 140.0000 | |
| Total dissolved solids (tds) | mg/L | MW-12A | 05/08/2007 | | 140.0000 | |
| Total dissolved solids (tds) | mg/L | MW-12A | 11/07/2007 | | 140.0000 | |
| Total dissolved solids (tds) | mg/L | MW-12A | 05/20/2008 | | 150.0000 | |
| Total dissolved solids (tds) | mg/L | MW-12A | 11/11/2008 | | 140.0000 | |
| Total dissolved solids (tds) | mg/L | MW-12A | 05/05/2009 | | 140.0000 | |
| Total dissolved solids (tds) | mg/L | MW-12A | 11/17/2009 | | 130.0000 | |
| Total dissolved solids (tds) | mg/L | MW-12A | 04/20/2010 | | 180.0000 | |
| Total dissolved solids (tds) | mg/L | MW-12A | 10/05/2010 | | 150.0000 | |
| Total dissolved solids (tds) | mg/L | MW-12A | 04/14/2011 | | 160.0000 | |
| Total dissolved solids (tds) | mg/L | MW-12A | 11/02/2011 | | 150.0000 | |
| Total dissolved solids (tds) | mg/L | MW-12A | 05/02/2012 | | 170.0000 | |
| Total dissolved solids (tds) | mg/L | MW-12A | 11/13/2012 | | 180.0000 | |
| Total organic carbon (toc) | mg/L | MW-12A | 12/28/1995 | | 3.1000 | |
| Total organic carbon (toc) | mg/L | MW-12A | 03/29/1996 | | 1.8000 | |
| Total organic carbon (toc) | mg/L | MW-12A | 05/24/1996 | ND | 1.0000 | |
| Total organic carbon (toc) | mg/L | MW-12A | 09/30/1996 | | 2.5000 | |
| Total organic carbon (toc) | mg/L | MW-12A | 01/14/1997 | | 1.5000 | |
| Total organic carbon (toc) | mg/L | MW-12A | 04/02/1997 | | 1.3000 | |
| Total organic carbon (toc) | mg/L | MW-12A | 05/20/1997 | | 2.8000 | |
| Total organic carbon (toc) | mg/L | MW-12A | 09/10/1997 | | 1.0000 | |
| Total organic carbon (toc) | mg/L | MW-12A | 12/22/1997 | | 1.4000 | |
| Total organic carbon (toc) | mg/L | MW-12A | 03/18/1998 | ND | 1.0000 | |
| Total organic carbon (toc) | mg/L | MW-12A | 04/30/1998 | ND | 1.0000 | |
| Total organic carbon (toc) | mg/L | MW-12A | 08/21/1998 | ND | 1.0000 | |
| Total organic carbon (toc) | mg/L | MW-12A | 12/17/1998 | | 0.8000 | |
| Total organic carbon (toc) | mg/L | MW-12A | 09/16/1999 | ND | 1.0000 | |
| Total organic carbon (toc) | mg/L | MW-12A | 02/08/2000 | ND | 1.0000 | |
| Total organic carbon (toc) | mg/L | MW-12A | 05/30/2000 | ND | 1.0000 | |
| Total organic carbon (toc) | mg/L | MW-12A | 11/07/2000 | ND | 1.0000 | |
| Total organic carbon (toc) | mg/L | MW-12A | 04/25/2001 | ND | 1.0000 | |
| Total organic carbon (toc) | mg/L | MW-12A | 11/07/2001 | | 1.0000 | |
| Total organic carbon (toc) | mg/L | MW-12A | 04/10/2002 | ND | 1.0000 | |
| Total organic carbon (toc) | mg/L | MW-12A | 05/14/2003 | ND | 1.0000 | |
| Total organic carbon (toc) | mg/L | MW-12A | 11/20/2003 | ND | 1.0000 | |
| Total organic carbon (toc) | mg/L | MW-12A | 04/21/2004 | | 1.1000 | |
| Total organic carbon (toc) | mg/L | MW-12A | 11/09/2004 | | 1.7000 | |
| Total organic carbon (toc) | mg/L | MW-12A | 05/24/2005 | | 1.1000 | |

* - Outlier for that well and constituent.
ND = Not detected, result = detection limit.

# Table 1

## Upgradient Data

| Constituent | Units | Well | Date | | Result | |
|---|---|---|---|---|---|---|
| Total organic carbon (toc) | mg/L | MW-12A | 10/26/2005 | | 1.6000 | |
| Total organic carbon (toc) | mg/L | MW-12A | 05/09/2006 | | 1.0000 | |
| Total organic carbon (toc) | mg/L | MW-12A | 10/17/2006 | ND | 1.0000 | |
| Total organic carbon (toc) | mg/L | MW-12A | 05/08/2007 | | 1.7000 | |
| Total organic carbon (toc) | mg/L | MW-12A | 11/07/2007 | ND | 1.0000 | |
| Total organic carbon (toc) | mg/L | MW-12A | 05/20/2008 | | 1.4000 | |
| Total organic carbon (toc) | mg/L | MW-12A | 11/11/2008 | | 1.6000 | |
| Total organic carbon (toc) | mg/L | MW-12A | 05/05/2009 | | 1.0000 | |
| Total organic carbon (toc) | mg/L | MW-12A | 11/17/2009 | | 1.2000 | |
| Total organic carbon (toc) | mg/L | MW-12A | 04/20/2010 | | 2.5000 | |
| Total organic carbon (toc) | mg/L | MW-12A | 10/05/2010 | ND | 1.0000 | |
| Total organic carbon (toc) | mg/L | MW-12A | 04/14/2011 | | 2.2000 | |
| Total organic carbon (toc) | mg/L | MW-12A | 11/02/2011 | | 1.0000 | |
| Total organic carbon (toc) | mg/L | MW-12A | 05/02/2012 | | 1.8000 | |
| Total organic carbon (toc) | mg/L | MW-12A | 11/13/2012 | | 1.6000 | |

* - Outlier for that well and constituent.
ND = Not detected, result = detection limit.

# Table 2

## Shapiro Wilk Test of Normality for Multiple Groups

| Constituent | N (Detects) | Detect Freq | G raw | G log | Critical Value | Limit Type |
|---|---|---|---|---|---|---|
| Alkalinity, bicarbonate (as caco3) | 34 | 1.000 | 0.057 | 0.099 | 2.326 | normal |
| Chloride | 41 | 1.000 | 1.829 | 1.348 | 2.326 | normal |
| Magnesium, dissolved | 40 | 1.000 | 0.775 | 0.379 | 2.326 | normal |
| Potassium, dissolved | 25 | 0.625 | 0.421 | 0.718 | 2.326 | normal |
| Sodium, dissolved | 41 | 1.000 | 2.515 | 1.106 | 2.326 | lognor |
| Total dissolved solids (tds) | 40 | 1.000 | 1.345 | 0.571 | 2.326 | normal |
| Total organic carbon (toc) | 25 | 0.625 | 2.176 | 1.162 | 2.326 | normal |

Fit to distribution is confirmed if G < critical value.
If detection frequency is < 50% nonparametric or Poisson limit is used

# Table 3

## Summary Statistics and Prediction Limits

| Constituent | Units | Model Type | N | Detect | Mean | SD | Pred Limit | Conf* |
|---|---|---|---|---|---|---|---|---|
| Alkalinity, bicarbonate (as caco3) | mg/L | normal | 34 | 34 | 51.1382 | 12.1788 | 81.3453 | |
| Chloride | mg/L | normal | 41 | 41 | 28.3854 | 14.2936 | 63.4407 | |
| Magnesium, dissolved | mg/L | normal | 40 | 40 | 7.4948 | 1.6412 | 11.5254 | |
| Potassium, dissolved | mg/L | normal | 40 | 25 | 0.3828 | 0.3333 | 1.2013 | |
| Sodium, dissolved | mg/L | lognor | 41 | 41 | 2.5580 | 0.2136 | 21.7972 | |
| Total dissolved solids (tds) | mg/L | normal | 40 | 40 | 154.8500 | 34.8297 | 240.3868 | |
| Total organic carbon (toc) | mg/L | normal | 40 | 25 | 0.9925 | 0.9175 | 3.2457 | |

* - Confidence level for passing initial test or one verification resample at all downgradient wells for a single constituent (nonparametric test only).
Model Type refers to type of prediction limit.
For lognormal limit, mean and sd in natural log units and prediction limit in original units.
All sample sizes and statistics are based on outlier free data.
For nonparametric limits, median reporting limits are substituted for extreme reporting limit values.

## Worksheet 1

## Alkalinity, bicarbonate (as caco3) (mg/L)

## Normal Prediction Limit

| Step | Equation | Description |
|---|---|---|
| 1 | $\overline{X}$ = **sum[X]** / **N**<br>= **1738.7** / **34**<br>= **51.138** | Compute upgradient mean. |
| 2 | S = ( (**sum[X$^2$]** - **sum[X]**$^2$/**N**) / (**N**-1) )$^{½}$<br>= ( (**93808.73** - **3.02**x**10**$^6$/**34**) / (**34**-1) )$^{½}$<br>= **12.179** | Compute upgradient sd. |
| 3 | alpha = min[ (1-.95$^{1/K}$)$^{½}$ or .01 ]<br>= min[ (1-.95$^{1/7}$)$^{½}$ or .01 ]<br>= **0.01** | Adjusted per comparison false positive rate. Pass initial or 1 resample. |
| 4 | PL = $\overline{X}$ + **tS**(1+1/**N**)$^{½}$<br>= **51.138** + (**2.445***12.179)(1+1/**34**)$^{½}$<br>= **81.345** | One-sided normal prediction limit (t is Student's t on N-1 degrees of freedom and 1-alpha confidence level). |

## Worksheet 2

## Chloride (mg/L)

## Normal Prediction Limit

| Step | Equation | Description |
|---|---|---|
| 1 | $\overline{X}$ = **sum[X]** / **N**<br>= **1163.8** / **41**<br>= **28.385** | Compute upgradient mean. |
| 2 | S = ( (**sum[X$^2$]** - **sum[X]**$^2$/**N**) / (**N**-1) )$^{½}$<br>= ( (**41207.16** - **1.35**x**10$^6$**/**41**) / (**41**-1) )$^{½}$<br>= **14.294** | Compute upgradient sd. |
| 3 | alpha = min[ (1-.95$^{1/K}$)$^{½}$ or .01 ]<br>= min[ (1-.95$^{1/7}$)$^{½}$ or .01 ]<br>= **0.01** | Adjusted per comparison false positive rate. Pass initial or 1 resample. |
| 4 | PL = $\overline{X}$ + **tS**(1+1/**N**)$^{½}$<br>= **28.385** + (**2.423***14.294)(1+1/**41**)$^{½}$<br>= **63.441** | One-sided normal prediction limit (t is Student's t on N-1 degrees of freedom and 1-alpha confidence level). |

## Worksheet 3

## Magnesium, dissolved (mg/L)

## Normal Prediction Limit

| Step | Equation | Description |
|---|---|---|
| 1 | $\overline{X}$ = **sum[X]** / **N**<br>= **299.79** / **40**<br>= **7.495** | Compute upgradient mean. |
| 2 | S = ( (**sum[X$^2$]** - **sum[X]**$^2$/**N**) / (**N**-1) )$^{½}$<br>= ( (**2351.902** - **89874.044**/**40**) / (**40**-1) )$^{½}$<br>= **1.641** | Compute upgradient sd. |
| 3 | alpha = min[ (1-.95$^{1/K}$)$^{½}$ or .01 ]<br>= min[ (1-.95$^{1/7}$)$^{½}$ or .01 ]<br>= **0.01** | Adjusted per comparison false positive rate. Pass initial or 1 resample. |
| 4 | PL = $\overline{X}$ + **tS**(1+1/**N**)$^{½}$<br>= **7.495** + (**2.426*****1.641**)(1+1/**40**)$^{½}$<br>= **11.525** | One-sided normal prediction limit (t is Student's t on N-1 degrees of freedom and 1-alpha confidence level). |

## Worksheet 4

## Potassium, dissolved (mg/L)

## Normal Prediction Limit

| Step | Equation | Description |
|---|---|---|
| 1 | $\overline{X}_1 = \mathbf{sum[X_1]} / \mathbf{N_1}$<br>$= \mathbf{15.31} / \mathbf{25}$<br>$= \mathbf{0.612}$ | Compute mean of $N_1$ detected measurements. |
| 2 | $S_1 = ( (\mathbf{sum[X_1^2]} - \mathbf{sum[X_1]}^2/\mathbf{N_1}) / (\mathbf{N_1}-1) )^{½}$<br>$= ( (\mathbf{10.18} - \mathbf{234.396}/\mathbf{25}) / (\mathbf{25}-1) )^{½}$<br>$= \mathbf{0.183}$ | Compute sd of $N_1$ detected measurements. |
| 3 | $\overline{X} = (1 - \mathbf{N_0}/\mathbf{N})\ \overline{\mathbf{X}}_\mathbf{1}$<br>$= (1 - \mathbf{15}/\mathbf{40})\ \mathbf{0.612}$<br>$= \mathbf{0.383}$ | Compute adjusted mean. |
| 4 | $S = [ (1 - \mathbf{N_0}/\mathbf{N}) * \mathbf{S_1}^2 + (\mathbf{N_0}/\mathbf{N}) ( 1 - (\mathbf{N_0}-1)/(\mathbf{N}-1) ) \overline{\mathbf{X}}_\mathbf{1}^{\,2} ]^{½}$<br>$= [ (1 - \mathbf{15}/\mathbf{40}) * \mathbf{0.183}^2 + (\mathbf{15}/\mathbf{40}) ( 1 - (\mathbf{15}-1)/(\mathbf{40}-1) ) \mathbf{0.612}^2 ]^{½}$<br>$= \mathbf{0.333}$ | Compute adjusted sd. |
| 5 | $\text{alpha} = \min[ (1-.95^{1/\mathbf{K}})^{½} \text{ or } .01 ]$<br>$= \min[ (1-.95^{1/\mathbf{7}})^{½} \text{ or } .01 ]$<br>$= \mathbf{0.01}$ | Adjusted per comparison false positive rate. Pass initial or 1 resample. |
| 6 | $PL = \overline{\mathbf{X}} + \mathbf{tS}(1+1/\mathbf{N})^{½}$<br>$= \mathbf{0.383} + (\mathbf{2.426} * \mathbf{0.333})(1+1/\mathbf{40})^{½}$<br>$= \mathbf{1.201}$ | One-sided normal prediction limit (t is Student's t on N-1 degrees of freedom and 1-alpha confidence level). |

## Worksheet 5

## Sodium, dissolved (mg/L)

## Lognormal Prediction Limit

| Step | Equation | Description |
|---|---|---|
| 1 | $Y = \log_e(X)$ | Transform to natural logarithmic scale. |
| 2 | $\overline{Y}$ = **sum[Y]** / **N**<br>= **104.88** / **41**<br>= **2.558** | Compute mean on a natural log scale. |
| 3 | $S_Y = ( (\mathbf{sum[Y^2]} - \mathbf{sum[Y]}^2/\mathbf{N}) / (\mathbf{N}-1) )^{1/2}$<br>$= ( (\mathbf{270.111} - \mathbf{10999.773}/\mathbf{41}) / (\mathbf{41}-1) )^{1/2}$<br>= **0.214** | Compute sd on a natural log scale. |
| 4 | alpha = min[ $(1-.95^{1/\mathbf{K}})^{1/2}$ or .01 ]<br>= min[ $(1-.95^{1/\mathbf{7}})^{1/2}$ or .01 ]<br>= **0.01** | Adjusted per comparison false positive rate. Pass initial or 1 resample. |
| 5 | PL = $\exp[\overline{\mathbf{Y}} + \mathbf{tS_Y}(1+1/\mathbf{N})^{1/2}]$<br>= $\exp[\mathbf{2.558} + (\mathbf{2.423}*\mathbf{0.214})(1+1/\mathbf{41})^{1/2}]$<br>= **21.797** | One-sided lognormal prediction limit (t is Student's t on N-1 degrees of freedom and 1-alpha confidence level). |

## Worksheet 6

## Total dissolved solids (tds) (mg/L)

## Normal Prediction Limit

| Step | Equation | Description |
|---|---|---|
| 1 | $\overline{X}$ = **sum[X] / N**<br>= **6194.0 / 40**<br>= **154.85** | Compute upgradient mean. |
| 2 | S = ( (**sum[X$^2$] - sum[X]$^2$/N**) / (**N**-1) )$^{½}$<br>= ( (**1.01**x**10$^6$ - 3.84**x**10$^7$/40**) / (**40**-1) )$^{½}$<br>= **34.83** | Compute upgradient sd. |
| 3 | alpha = min[ (1-.95$^{1/K}$)$^{½}$ or .01 ]<br>= min[ (1-.95$^{1/7}$)$^{½}$ or .01 ]<br>= **0.01** | Adjusted per comparison false positive rate. Pass initial or 1 resample. |
| 4 | PL = $\overline{X}$ + **tS**(1+1/**N**)$^{½}$<br>= **154.85** + (**2.426***34.83)(1+1/**40**)$^{½}$<br>= **240.387** | One-sided normal prediction limit (t is Student's t on N-1 degrees of freedom and 1-alpha confidence level). |

## Worksheet 7

## Total organic carbon (toc) (mg/L)

## Normal Prediction Limit

| Step | Equation | Description |
|---|---|---|
| 1 | $\overline{X}_1 = \mathbf{sum[X_1]} / \mathbf{N_1}$<br>$= \mathbf{39.7} / \mathbf{25}$<br>$= \mathbf{1.588}$ | Compute mean of $N_1$ detected measurements. |
| 2 | $S_1 = ( (\mathbf{sum[X_1^2]} - \mathbf{sum[X_1]}^2/\mathbf{N_1}) / (\mathbf{N_1}-1) )^{½}$<br>$= ( (\mathbf{72.09} - \mathbf{1576.09}/\mathbf{25}) / (\mathbf{25}-1) )^{½}$<br>$= \mathbf{0.614}$ | Compute sd of $N_1$ detected measurements. |
| 3 | $\overline{X} = (1 - \mathbf{N_0}/\mathbf{N})\ \overline{\mathbf{X}}_\mathbf{1}$<br>$= (1 - \mathbf{15}/\mathbf{40})\ \mathbf{1.588}$<br>$= \mathbf{0.993}$ | Compute adjusted mean. |
| 4 | $S = [ (1 - \mathbf{N_0}/\mathbf{N}) * \mathbf{S_1}^2 + (\mathbf{N_0}/\mathbf{N}) ( 1 - (\mathbf{N_0}-1)/(\mathbf{N}-1) ) \overline{\mathbf{X}}_\mathbf{1}^{\,2} ]^{½}$<br>$= [ (1 - \mathbf{15}/\mathbf{40}) * \mathbf{0.614}^2 + (\mathbf{15}/\mathbf{40}) ( 1 - (\mathbf{15}-1)/(\mathbf{40}-1) ) \mathbf{1.588}^2 ]^{½}$<br>$= \mathbf{0.917}$ | Compute adjusted sd. |
| 5 | $\text{alpha} = \min[ (1-.95^{1/\mathbf{K}})^{½} \text{ or } .01 ]$<br>$= \min[ (1-.95^{1/\mathbf{7}})^{½} \text{ or } .01 ]$<br>$= \mathbf{0.01}$ | Adjusted per comparison false positive rate. Pass initial or 1 resample. |
| 6 | $PL = \overline{\mathbf{X}} + \mathbf{tS}(1+1/\mathbf{N})^{½}$<br>$= \mathbf{0.993} + (\mathbf{2.426}*\mathbf{0.917})(1+1/\mathbf{40})^{½}$<br>$= \mathbf{3.246}$ | One-sided normal prediction limit (t is Student's t on N-1 degrees of freedom and 1-alpha confidence level). |

MW-14A

# Table 1

## Upgradient Data

| Constituent | Units | Well | Date | | Result | |
|---|---|---|---|---|---|---|
| Alkalinity, bicarbonate (as caco3) | mg/L | MW-14A | 04/03/1997 | | 97.0000 | |
| Alkalinity, bicarbonate (as caco3) | mg/L | MW-14A | 05/20/1997 | | 101.0000 | |
| Alkalinity, bicarbonate (as caco3) | mg/L | MW-14A | 09/11/1997 | | 107.0000 | |
| Alkalinity, bicarbonate (as caco3) | mg/L | MW-14A | 12/30/1997 | | 108.0000 | |
| Alkalinity, bicarbonate (as caco3) | mg/L | MW-14A | 03/19/1998 | | 89.6000 | |
| Alkalinity, bicarbonate (as caco3) | mg/L | MW-14A | 06/11/1998 | | 110.0000 | |
| Alkalinity, bicarbonate (as caco3) | mg/L | MW-14A | 08/20/1998 | | 108.0000 | |
| Alkalinity, bicarbonate (as caco3) | mg/L | MW-14A | 12/16/1998 | | 100.0000 | |
| Alkalinity, bicarbonate (as caco3) | mg/L | MW-14A | 03/25/1999 | | 92.6000 | |
| Alkalinity, bicarbonate (as caco3) | mg/L | MW-14A | 06/16/1999 | | 92.0000 | |
| Alkalinity, bicarbonate (as caco3) | mg/L | MW-14A | 12/10/1999 | | 108.0000 | |
| Alkalinity, bicarbonate (as caco3) | mg/L | MW-14A | 02/09/2000 | | 72.6000 | |
| Alkalinity, bicarbonate (as caco3) | mg/L | MW-14A | 05/24/2000 | | 112.0000 | |
| Alkalinity, bicarbonate (as caco3) | mg/L | MW-14A | 01/30/2001 | | 133.0000 | |
| Alkalinity, bicarbonate (as caco3) | mg/L | MW-14A | 04/25/2001 | | 128.0000 | |
| Alkalinity, bicarbonate (as caco3) | mg/L | MW-14A | 08/29/2001 | | 112.0000 | |
| Alkalinity, bicarbonate (as caco3) | mg/L | MW-14A | 01/30/2002 | | 106.0000 | |
| Alkalinity, bicarbonate (as caco3) | mg/L | MW-14A | 04/09/2002 | | 116.0000 | |
| Alkalinity, bicarbonate (as caco3) | mg/L | MW-14A | 02/25/2003 | | 120.0000 | |
| Alkalinity, bicarbonate (as caco3) | mg/L | MW-14A | 05/13/2003 | | 120.0000 | |
| Alkalinity, bicarbonate (as caco3) | mg/L | MW-14A | 04/20/2004 | | 110.0000 | |
| Alkalinity, bicarbonate (as caco3) | mg/L | MW-14A | 05/25/2005 | | 120.0000 | |
| Alkalinity, bicarbonate (as caco3) | mg/L | MW-14A | 05/10/2006 | | 120.0000 | |
| Alkalinity, bicarbonate (as caco3) | mg/L | MW-14A | 11/22/2006 | | 84.0000 | |
| Alkalinity, bicarbonate (as caco3) | mg/L | MW-14A | 05/09/2007 | | 120.0000 | |
| Alkalinity, bicarbonate (as caco3) | mg/L | MW-14A | 12/27/2007 | | 96.0000 | |
| Alkalinity, bicarbonate (as caco3) | mg/L | MW-14A | 05/21/2008 | | 110.0000 | |
| Alkalinity, bicarbonate (as caco3) | mg/L | MW-14A | 11/13/2008 | | 130.0000 | |
| Alkalinity, bicarbonate (as caco3) | mg/L | MW-14A | 05/06/2009 | | 110.0000 | |
| Alkalinity, bicarbonate (as caco3) | mg/L | MW-14A | 11/18/2009 | | 130.0000 | |
| Alkalinity, bicarbonate (as caco3) | mg/L | MW-14A | 04/22/2010 | | 110.0000 | |
| Alkalinity, bicarbonate (as caco3) | mg/L | MW-14A | 11/24/2010 | | 130.0000 | |
| Alkalinity, bicarbonate (as caco3) | mg/L | MW-14A | 04/13/2011 | | 100.0000 | |
| Alkalinity, bicarbonate (as caco3) | mg/L | MW-14A | 01/12/2012 | | 110.0000 | |
| Alkalinity, bicarbonate (as caco3) | mg/L | MW-14A | 05/03/2012 | | 110.0000 | |
| Alkalinity, bicarbonate (as caco3) | mg/L | MW-14A | 11/13/2012 | | 150.0000 | |
| Chloride | mg/L | MW-14A | 04/03/1997 | | 8.5000 | |
| Chloride | mg/L | MW-14A | 05/20/1997 | | 8.2000 | |
| Chloride | mg/L | MW-14A | 09/11/1997 | | 10.8000 | |
| Chloride | mg/L | MW-14A | 12/30/1997 | | 9.2000 | |
| Chloride | mg/L | MW-14A | 03/19/1998 | | 7.3000 | |
| Chloride | mg/L | MW-14A | 06/11/1998 | | 7.5000 | |
| Chloride | mg/L | MW-14A | 08/20/1998 | | 8.7000 | |
| Chloride | mg/L | MW-14A | 12/16/1998 | | 7.8000 | |

* - Outlier for that well and constituent.
ND = Not detected, result = detection limit.

# Table 1

## Upgradient Data

| Constituent | Units | Well | Date | | Result | |
|---|---|---|---|---|---|---|
| Chloride | mg/L | MW-14A | 03/25/1999 | | 8.2000 | |
| Chloride | mg/L | MW-14A | 06/16/1999 | | 9.4000 | |
| Chloride | mg/L | MW-14A | 12/10/1999 | | 8.0000 | |
| Chloride | mg/L | MW-14A | 02/09/2000 | | 6.5000 | |
| Chloride | mg/L | MW-14A | 05/24/2000 | | 9.4000 | |
| Chloride | mg/L | MW-14A | 01/30/2001 | | 13.6000 | |
| Chloride | mg/L | MW-14A | 04/25/2001 | | 15.4000 | |
| Chloride | mg/L | MW-14A | 07/11/2001 | | 17.0000 | |
| Chloride | mg/L | MW-14A | 08/29/2001 | | 19.6000 | |
| Chloride | mg/L | MW-14A | 01/30/2002 | | 13.3000 | |
| Chloride | mg/L | MW-14A | 04/09/2002 | | 13.9000 | |
| Chloride | mg/L | MW-14A | 02/25/2003 | | 8.2000 | |
| Chloride | mg/L | MW-14A | 05/13/2003 | | 9.7000 | |
| Chloride | mg/L | MW-14A | 04/20/2004 | | 9.6000 | |
| Chloride | mg/L | MW-14A | 05/25/2005 | | 12.0000 | |
| Chloride | mg/L | MW-14A | 05/10/2006 | | 12.0000 | |
| Chloride | mg/L | MW-14A | 11/22/2006 | | 6.1000 | |
| Chloride | mg/L | MW-14A | 05/09/2007 | | 12.0000 | |
| Chloride | mg/L | MW-14A | 12/27/2007 | | 5.1000 | |
| Chloride | mg/L | MW-14A | 05/21/2008 | | 8.7000 | |
| Chloride | mg/L | MW-14A | 11/13/2008 | | 14.0000 | |
| Chloride | mg/L | MW-14A | 05/06/2009 | | 26.0000 | |
| Chloride | mg/L | MW-14A | 11/18/2009 | | 33.0000 | |
| Chloride | mg/L | MW-14A | 01/07/2010 | | 23.0000 | |
| Chloride | mg/L | MW-14A | 04/22/2010 | | 21.0000 | |
| Chloride | mg/L | MW-14A | 11/24/2010 | | 29.0000 | |
| Chloride | mg/L | MW-14A | 04/13/2011 | | 14.0000 | |
| Chloride | mg/L | MW-14A | 01/12/2012 | | 11.0000 | |
| Chloride | mg/L | MW-14A | 05/03/2012 | | 9.4000 | |
| Chloride | mg/L | MW-14A | 11/13/2012 | | 13.0000 | |
| Magnesium, dissolved | mg/L | MW-14A | 04/03/1997 | | 10.1000 | |
| Magnesium, dissolved | mg/L | MW-14A | 05/20/1997 | | 11.7000 | |
| Magnesium, dissolved | mg/L | MW-14A | 09/11/1997 | | 0.0940 | * |
| Magnesium, dissolved | mg/L | MW-14A | 12/30/1997 | | 12.4000 | |
| Magnesium, dissolved | mg/L | MW-14A | 03/19/1998 | | 10.8000 | |
| Magnesium, dissolved | mg/L | MW-14A | 06/11/1998 | | 11.5000 | |
| Magnesium, dissolved | mg/L | MW-14A | 08/20/1998 | | 12.4000 | |
| Magnesium, dissolved | mg/L | MW-14A | 12/16/1998 | | 11.6000 | |
| Magnesium, dissolved | mg/L | MW-14A | 03/25/1999 | | 11.7000 | |
| Magnesium, dissolved | mg/L | MW-14A | 06/16/1999 | | 12.2000 | |
| Magnesium, dissolved | mg/L | MW-14A | 12/10/1999 | | 11.6000 | |
| Magnesium, dissolved | mg/L | MW-14A | 02/09/2000 | | 10.3000 | |
| Magnesium, dissolved | mg/L | MW-14A | 05/24/2000 | | 12.6000 | |
| Magnesium, dissolved | mg/L | MW-14A | 01/30/2001 | | 12.6000 | |

* - Outlier for that well and constituent.
ND = Not detected, result = detection limit.

# Table 1

## Upgradient Data

| Constituent | Units | Well | Date | | Result | |
|---|---|---|---|---|---|---|
| Magnesium, dissolved | mg/L | MW-14A | 04/25/2001 | | 14.1000 | |
| Magnesium, dissolved | mg/L | MW-14A | 08/29/2001 | | 13.8000 | |
| Magnesium, dissolved | mg/L | MW-14A | 01/30/2002 | | 12.2000 | |
| Magnesium, dissolved | mg/L | MW-14A | 04/09/2002 | | 12.5000 | |
| Magnesium, dissolved | mg/L | MW-14A | 02/25/2003 | | 11.0000 | |
| Magnesium, dissolved | mg/L | MW-14A | 05/13/2003 | | 13.0000 | |
| Magnesium, dissolved | mg/L | MW-14A | 04/20/2004 | | 13.0000 | |
| Magnesium, dissolved | mg/L | MW-14A | 05/25/2005 | | 14.0000 | |
| Magnesium, dissolved | mg/L | MW-14A | 05/10/2006 | | 13.0000 | |
| Magnesium, dissolved | mg/L | MW-14A | 11/22/2006 | | 9.9000 | |
| Magnesium, dissolved | mg/L | MW-14A | 05/09/2007 | | 13.0000 | |
| Magnesium, dissolved | mg/L | MW-14A | 12/27/2007 | | 9.7000 | |
| Magnesium, dissolved | mg/L | MW-14A | 05/21/2008 | | 12.0000 | |
| Magnesium, dissolved | mg/L | MW-14A | 11/13/2008 | | 13.0000 | |
| Magnesium, dissolved | mg/L | MW-14A | 05/06/2009 | | 13.0000 | |
| Magnesium, dissolved | mg/L | MW-14A | 11/18/2009 | | 16.0000 | |
| Magnesium, dissolved | mg/L | MW-14A | 01/07/2010 | | 14.0000 | |
| Magnesium, dissolved | mg/L | MW-14A | 04/22/2010 | | 12.0000 | |
| Magnesium, dissolved | mg/L | MW-14A | 11/24/2010 | | 17.0000 | |
| Magnesium, dissolved | mg/L | MW-14A | 04/13/2011 | | 12.0000 | |
| Magnesium, dissolved | mg/L | MW-14A | 01/12/2012 | | 11.0000 | |
| Magnesium, dissolved | mg/L | MW-14A | 05/03/2012 | | 11.0000 | |
| Magnesium, dissolved | mg/L | MW-14A | 11/13/2012 | | 16.0000 | |
| Potassium, dissolved | mg/L | MW-14A | 04/03/1997 | | 0.8500 | |
| Potassium, dissolved | mg/L | MW-14A | 05/20/1997 | | 0.1900 | |
| Potassium, dissolved | mg/L | MW-14A | 09/11/1997 | ND | 0.1500 | |
| Potassium, dissolved | mg/L | MW-14A | 12/30/1997 | | 0.5000 | |
| Potassium, dissolved | mg/L | MW-14A | 03/19/1998 | | 0.1700 | |
| Potassium, dissolved | mg/L | MW-14A | 06/11/1998 | | 0.2900 | |
| Potassium, dissolved | mg/L | MW-14A | 08/20/1998 | | 0.2300 | |
| Potassium, dissolved | mg/L | MW-14A | 12/16/1998 | ND | 2.0000 | * |
| Potassium, dissolved | mg/L | MW-14A | 03/25/1999 | | 0.2500 | |
| Potassium, dissolved | mg/L | MW-14A | 06/16/1999 | ND | 0.3000 | |
| Potassium, dissolved | mg/L | MW-14A | 12/10/1999 | | 0.2900 | |
| Potassium, dissolved | mg/L | MW-14A | 02/09/2000 | | 0.3000 | |
| Potassium, dissolved | mg/L | MW-14A | 05/24/2000 | ND | 0.4300 | |
| Potassium, dissolved | mg/L | MW-14A | 01/30/2001 | ND | 0.5000 | |
| Potassium, dissolved | mg/L | MW-14A | 04/25/2001 | ND | 0.5000 | |
| Potassium, dissolved | mg/L | MW-14A | 08/29/2001 | ND | 0.5000 | |
| Potassium, dissolved | mg/L | MW-14A | 01/30/2002 | ND | 0.5000 | |
| Potassium, dissolved | mg/L | MW-14A | 04/09/2002 | ND | 0.5000 | |
| Potassium, dissolved | mg/L | MW-14A | 02/25/2003 | ND | 0.5000 | |
| Potassium, dissolved | mg/L | MW-14A | 05/13/2003 | ND | 0.5000 | |
| Potassium, dissolved | mg/L | MW-14A | 04/20/2004 | ND | 0.5000 | |

* - Outlier for that well and constituent.
ND = Not detected, result = detection limit.

# Table 1

## Upgradient Data

| Constituent | Units | Well | Date | | Result | |
|---|---|---|---|---|---|---|
| Potassium, dissolved | mg/L | MW-14A | 05/25/2005 | ND | 0.5000 | |
| Potassium, dissolved | mg/L | MW-14A | 05/10/2006 | ND | 0.5000 | |
| Potassium, dissolved | mg/L | MW-14A | 11/22/2006 | ND | 0.5000 | |
| Potassium, dissolved | mg/L | MW-14A | 05/09/2007 | ND | 0.5000 | |
| Potassium, dissolved | mg/L | MW-14A | 12/27/2007 | ND | 0.5000 | |
| Potassium, dissolved | mg/L | MW-14A | 05/21/2008 | ND | 0.5000 | |
| Potassium, dissolved | mg/L | MW-14A | 11/13/2008 | ND | 0.5000 | |
| Potassium, dissolved | mg/L | MW-14A | 05/06/2009 | ND | 0.5000 | |
| Potassium, dissolved | mg/L | MW-14A | 11/18/2009 | ND | 0.5000 | |
| Potassium, dissolved | mg/L | MW-14A | 04/22/2010 | ND | 0.5000 | |
| Potassium, dissolved | mg/L | MW-14A | 11/24/2010 | ND | 0.5000 | |
| Potassium, dissolved | mg/L | MW-14A | 04/13/2011 | ND | 0.5000 | |
| Potassium, dissolved | mg/L | MW-14A | 01/12/2012 | ND | 0.5000 | |
| Potassium, dissolved | mg/L | MW-14A | 05/03/2012 | ND | 0.5000 | |
| Potassium, dissolved | mg/L | MW-14A | 11/13/2012 | ND | 0.5000 | |
| Sodium, dissolved | mg/L | MW-14A | 04/03/1997 | | 17.2000 | |
| Sodium, dissolved | mg/L | MW-14A | 05/20/1997 | | 11.5000 | |
| Sodium, dissolved | mg/L | MW-14A | 09/11/1997 | ND | 1.0000 | * |
| Sodium, dissolved | mg/L | MW-14A | 12/30/1997 | | 12.9000 | |
| Sodium, dissolved | mg/L | MW-14A | 03/19/1998 | | 11.3000 | |
| Sodium, dissolved | mg/L | MW-14A | 06/11/1998 | | 10.8000 | |
| Sodium, dissolved | mg/L | MW-14A | 08/20/1998 | | 10.4000 | |
| Sodium, dissolved | mg/L | MW-14A | 12/16/1998 | | 11.3000 | |
| Sodium, dissolved | mg/L | MW-14A | 03/25/1999 | | 10.1000 | |
| Sodium, dissolved | mg/L | MW-14A | 06/16/1999 | | 8.9000 | |
| Sodium, dissolved | mg/L | MW-14A | 12/10/1999 | | 13.4000 | |
| Sodium, dissolved | mg/L | MW-14A | 02/09/2000 | | 9.5000 | |
| Sodium, dissolved | mg/L | MW-14A | 05/24/2000 | | 11.8000 | |
| Sodium, dissolved | mg/L | MW-14A | 01/30/2001 | | 11.8000 | |
| Sodium, dissolved | mg/L | MW-14A | 04/25/2001 | | 12.5000 | |
| Sodium, dissolved | mg/L | MW-14A | 08/29/2001 | | 11.8000 | |
| Sodium, dissolved | mg/L | MW-14A | 01/30/2002 | | 12.4000 | |
| Sodium, dissolved | mg/L | MW-14A | 04/09/2002 | | 10.9000 | |
| Sodium, dissolved | mg/L | MW-14A | 02/25/2003 | | 12.0000 | |
| Sodium, dissolved | mg/L | MW-14A | 05/13/2003 | | 10.0000 | |
| Sodium, dissolved | mg/L | MW-14A | 04/20/2004 | | 11.0000 | |
| Sodium, dissolved | mg/L | MW-14A | 05/25/2005 | | 13.0000 | |
| Sodium, dissolved | mg/L | MW-14A | 05/10/2006 | | 11.0000 | |
| Sodium, dissolved | mg/L | MW-14A | 11/22/2006 | | 13.0000 | |
| Sodium, dissolved | mg/L | MW-14A | 05/09/2007 | | 11.0000 | |
| Sodium, dissolved | mg/L | MW-14A | 12/27/2007 | | 13.0000 | |
| Sodium, dissolved | mg/L | MW-14A | 05/21/2008 | | 10.0000 | |
| Sodium, dissolved | mg/L | MW-14A | 11/13/2008 | | 11.0000 | |
| Sodium, dissolved | mg/L | MW-14A | 05/06/2009 | | 11.0000 | |

* - Outlier for that well and constituent.
ND = Not detected, result = detection limit.

# Table 1

## Upgradient Data

| Constituent | Units | Well | Date | | Result | |
|---|---|---|---|---|---|---|
| Sodium, dissolved | mg/L | MW-14A | 11/18/2009 | | 14.0000 | |
| Sodium, dissolved | mg/L | MW-14A | 04/22/2010 | | 11.0000 | |
| Sodium, dissolved | mg/L | MW-14A | 11/24/2010 | | 13.0000 | |
| Sodium, dissolved | mg/L | MW-14A | 04/13/2011 | | 12.0000 | |
| Sodium, dissolved | mg/L | MW-14A | 01/12/2012 | | 12.0000 | |
| Sodium, dissolved | mg/L | MW-14A | 05/03/2012 | | 9.2000 | |
| Sodium, dissolved | mg/L | MW-14A | 11/13/2012 | | 13.0000 | |
| Total dissolved solids (tds) | mg/L | MW-14A | 04/03/1997 | | 209.0000 | |
| Total dissolved solids (tds) | mg/L | MW-14A | 05/20/1997 | | 177.0000 | |
| Total dissolved solids (tds) | mg/L | MW-14A | 09/11/1997 | | 239.0000 | |
| Total dissolved solids (tds) | mg/L | MW-14A | 12/30/1997 | | 149.0000 | |
| Total dissolved solids (tds) | mg/L | MW-14A | 03/19/1998 | | 177.0000 | |
| Total dissolved solids (tds) | mg/L | MW-14A | 06/11/1998 | | 194.0000 | |
| Total dissolved solids (tds) | mg/L | MW-14A | 08/20/1998 | | 171.0000 | |
| Total dissolved solids (tds) | mg/L | MW-14A | 12/16/1998 | | 188.0000 | |
| Total dissolved solids (tds) | mg/L | MW-14A | 03/25/1999 | | 57.0000 | * |
| Total dissolved solids (tds) | mg/L | MW-14A | 06/16/1999 | | 182.0000 | |
| Total dissolved solids (tds) | mg/L | MW-14A | 12/10/1999 | | 199.0000 | |
| Total dissolved solids (tds) | mg/L | MW-14A | 02/09/2000 | | 197.0000 | |
| Total dissolved solids (tds) | mg/L | MW-14A | 05/24/2000 | | 266.0000 | |
| Total dissolved solids (tds) | mg/L | MW-14A | 01/30/2001 | | 130.0000 | |
| Total dissolved solids (tds) | mg/L | MW-14A | 04/25/2001 | | 308.0000 | |
| Total dissolved solids (tds) | mg/L | MW-14A | 08/29/2001 | | 162.0000 | |
| Total dissolved solids (tds) | mg/L | MW-14A | 01/30/2002 | | 164.0000 | |
| Total dissolved solids (tds) | mg/L | MW-14A | 04/09/2002 | | 243.0000 | |
| Total dissolved solids (tds) | mg/L | MW-14A | 02/25/2003 | | 170.0000 | |
| Total dissolved solids (tds) | mg/L | MW-14A | 05/13/2003 | | 190.0000 | |
| Total dissolved solids (tds) | mg/L | MW-14A | 04/20/2004 | | 150.0000 | |
| Total dissolved solids (tds) | mg/L | MW-14A | 05/25/2005 | | 170.0000 | |
| Total dissolved solids (tds) | mg/L | MW-14A | 05/10/2006 | | 180.0000 | |
| Total dissolved solids (tds) | mg/L | MW-14A | 11/22/2006 | | 170.0000 | |
| Total dissolved solids (tds) | mg/L | MW-14A | 05/09/2007 | | 190.0000 | |
| Total dissolved solids (tds) | mg/L | MW-14A | 12/27/2007 | | 170.0000 | |
| Total dissolved solids (tds) | mg/L | MW-14A | 05/21/2008 | | 180.0000 | |
| Total dissolved solids (tds) | mg/L | MW-14A | 11/13/2008 | | 190.0000 | |
| Total dissolved solids (tds) | mg/L | MW-14A | 05/06/2009 | | 180.0000 | |
| Total dissolved solids (tds) | mg/L | MW-14A | 11/18/2009 | | 210.0000 | |
| Total dissolved solids (tds) | mg/L | MW-14A | 04/22/2010 | | 190.0000 | |
| Total dissolved solids (tds) | mg/L | MW-14A | 11/24/2010 | | 220.0000 | |
| Total dissolved solids (tds) | mg/L | MW-14A | 04/13/2011 | | 170.0000 | |
| Total dissolved solids (tds) | mg/L | MW-14A | 01/12/2012 | | 170.0000 | |
| Total dissolved solids (tds) | mg/L | MW-14A | 05/03/2012 | | 160.0000 | |
| Total dissolved solids (tds) | mg/L | MW-14A | 11/13/2012 | | 210.0000 | |
| Total organic carbon (toc) | mg/L | MW-14A | 04/03/1997 | | 1.5000 | |

* - Outlier for that well and constituent.
ND = Not detected, result = detection limit.

# Table 1

## Upgradient Data

| Constituent | Units | Well | Date | | Result | |
|---|---|---|---|---|---|---|
| Total organic carbon (toc) | mg/L | MW-14A | 05/20/1997 | ND | 1.0000 | |
| Total organic carbon (toc) | mg/L | MW-14A | 09/11/1997 | ND | 1.0000 | |
| Total organic carbon (toc) | mg/L | MW-14A | 12/30/1997 | | 1.9000 | |
| Total organic carbon (toc) | mg/L | MW-14A | 03/19/1998 | | 1.0000 | |
| Total organic carbon (toc) | mg/L | MW-14A | 06/11/1998 | ND | 1.0000 | |
| Total organic carbon (toc) | mg/L | MW-14A | 08/20/1998 | ND | 1.0000 | |
| Total organic carbon (toc) | mg/L | MW-14A | 03/25/1999 | | 1.5000 | |
| Total organic carbon (toc) | mg/L | MW-14A | 06/16/1999 | | 21.7000 | * |
| Total organic carbon (toc) | mg/L | MW-14A | 12/10/1999 | | 1.5000 | |
| Total organic carbon (toc) | mg/L | MW-14A | 02/09/2000 | | 1.0000 | |
| Total organic carbon (toc) | mg/L | MW-14A | 05/24/2000 | ND | 1.0000 | |
| Total organic carbon (toc) | mg/L | MW-14A | 01/30/2001 | | 1.6000 | |
| Total organic carbon (toc) | mg/L | MW-14A | 04/25/2001 | | 1.4000 | |
| Total organic carbon (toc) | mg/L | MW-14A | 08/29/2001 | ND | 1.0000 | |
| Total organic carbon (toc) | mg/L | MW-14A | 01/30/2002 | | 1.3000 | |
| Total organic carbon (toc) | mg/L | MW-14A | 04/09/2002 | ND | 1.0000 | |
| Total organic carbon (toc) | mg/L | MW-14A | 02/25/2003 | ND | 1.0000 | |
| Total organic carbon (toc) | mg/L | MW-14A | 05/13/2003 | | 2.1000 | |
| Total organic carbon (toc) | mg/L | MW-14A | 04/20/2004 | | 2.3000 | |
| Total organic carbon (toc) | mg/L | MW-14A | 05/25/2005 | ND | 1.0000 | |
| Total organic carbon (toc) | mg/L | MW-14A | 05/10/2006 | | 1.5000 | |
| Total organic carbon (toc) | mg/L | MW-14A | 11/22/2006 | | 1.4000 | |
| Total organic carbon (toc) | mg/L | MW-14A | 05/09/2007 | | 1.2000 | |
| Total organic carbon (toc) | mg/L | MW-14A | 12/27/2007 | ND | 1.0000 | |
| Total organic carbon (toc) | mg/L | MW-14A | 05/21/2008 | | 1.1000 | |
| Total organic carbon (toc) | mg/L | MW-14A | 11/13/2008 | | 3.0000 | |
| Total organic carbon (toc) | mg/L | MW-14A | 05/06/2009 | | 1.2000 | |
| Total organic carbon (toc) | mg/L | MW-14A | 11/18/2009 | | 2.2000 | |
| Total organic carbon (toc) | mg/L | MW-14A | 04/22/2010 | ND | 1.0000 | |
| Total organic carbon (toc) | mg/L | MW-14A | 11/24/2010 | ND | 1.0000 | |
| Total organic carbon (toc) | mg/L | MW-14A | 04/13/2011 | ND | 1.0000 | |
| Total organic carbon (toc) | mg/L | MW-14A | 01/12/2012 | ND | 1.0000 | |
| Total organic carbon (toc) | mg/L | MW-14A | 05/03/2012 | ND | 1.0000 | |
| Total organic carbon (toc) | mg/L | MW-14A | 11/13/2012 | ND | 1.0000 | |

* - Outlier for that well and constituent.
ND = Not detected, result = detection limit.

# Table 2

## Shapiro Wilk Test of Normality for Multiple Groups

| Constituent | N (Detects) | Detect Freq | G raw | G log | Critical Value | Limit Type |
|---|---|---|---|---|---|---|
| Alkalinity, bicarbonate (as caco3) | 36 | 1.000 | 0.681 | 0.134 | 2.326 | normal |
| Chloride | 38 | 1.000 | 4.122 | 1.477 | 2.326 | lognor |
| Magnesium, dissolved | 36 | 1.000 | 1.576 | 0.501 | 2.326 | normal |
| Potassium, dissolved | 9 | 0.257 | 2.561 | 2.140 | 2.326 | nonpar |
| Sodium, dissolved | 35 | 1.000 | 1.780 | 0.392 | 2.326 | normal |
| Total dissolved solids (tds) | 35 | 1.000 | 2.967 | 1.307 | 2.326 | lognor |
| Total organic carbon (toc) | 18 | 0.529 | 1.944 | 0.943 | 2.326 | normal |

Fit to distribution is confirmed if G < critical value.
If detection frequency is < 50% nonparametric or Poisson limit is used

# Table 3

## Summary Statistics and Prediction Limits

| Constituent | Units | Model Type | N | Detect | Mean | SD | Pred Limit | Conf* |
|---|---|---|---|---|---|---|---|---|
| Alkalinity, bicarbonate (as caco3) | mg/L | normal | 36 | 36 | 110.3556 | 15.1121 | 147.7003 | |
| Chloride | mg/L | lognor | 38 | 38 | 2.4329 | 0.4370 | 33.4271 | |
| Magnesium, dissolved | mg/L | normal | 36 | 36 | 12.4361 | 1.6437 | 16.4980 | |
| Potassium, dissolved | mg/L | nonpar | 35 | 9 | | | 0.8500 | 0.99 |
| Sodium, dissolved | mg/L | normal | 35 | 35 | 11.6771 | 1.5666 | 15.5554 | |
| Total dissolved solids (tds) | mg/L | lognor | 35 | 35 | 5.2291 | 0.1667 | 281.9578 | |
| Total organic carbon (toc) | mg/L | normal | 34 | 18 | 0.8441 | 0.8929 | 3.0589 | |

* - Confidence level for passing initial test or one verification resample at all downgradient wells for a single constituent (nonparametric test only).
Model Type refers to type of prediction limit.
For lognormal limit, mean and sd in natural log units and prediction limit in original units.
All sample sizes and statistics are based on outlier free data.
For nonparametric limits, median reporting limits are substituted for extreme reporting limit values.

## Worksheet 1

## Alkalinity, bicarbonate (as caco3) (mg/L)

## Normal Prediction Limit

| Step | Equation | Description |
|---|---|---|
| 1 | $\overline{X}$ = **sum[X]** / **N**<br>= **3972.8** / **36**<br>= **110.356** | Compute upgradient mean. |
| 2 | S = ( (**sum[X$^2$]** - **sum[X]**$^2$/**N**) / (**N**-1) )$^{½}$<br>= ( (**446413.68** - **1.58**x**10**$^7$/**36**) / (**36**-1) )$^{½}$<br>= **15.112** | Compute upgradient sd. |
| 3 | alpha = min[ (1-.95$^{1/K}$)$^{½}$ or .01 ]<br>= min[ (1-.95$^{1/7}$)$^{½}$ or .01 ]<br>= **0.01** | Adjusted per comparison false positive rate. Pass initial or 1 resample. |
| 4 | PL = $\overline{X}$ + **tS**(1+1/**N**)$^{½}$<br>= **110.356** + (**2.438***15.112)(1+1/**36**)$^{½}$<br>= **147.7** | One-sided normal prediction limit (t is Student's t on N-1 degrees of freedom and 1-alpha confidence level). |

## Worksheet 2

## Chloride (mg/L)

## Lognormal Prediction Limit

| Step | Equation | Description |
|---|---|---|
| 1 | $Y = \log_e(X)$ | Transform to natural logarithmic scale. |
| 2 | $\overline{Y}$ = **sum[Y]** / **N**<br>= **92.45** / **38**<br>= **2.433** | Compute mean on a natural log scale. |
| 3 | $S_Y = ( (\mathbf{sum[Y^2]} - \mathbf{sum[Y]}^2/\mathbf{N}) / (\mathbf{N}-1) )^{½}$<br>$= ( (\mathbf{231.988} - \mathbf{8547.0}/\mathbf{38}) / (\mathbf{38}-1) )^{½}$<br>= **0.437** | Compute sd on a natural log scale. |
| 4 | alpha = min[ $(1-.95^{1/\mathbf{K}})^{½}$ or .01 ]<br>= min[ $(1-.95^{1/\mathbf{7}})^{½}$ or .01 ]<br>= **0.01** | Adjusted per comparison false positive rate. Pass initial or 1 resample. |
| 5 | PL = $\exp[\overline{\mathbf{Y}} + \mathbf{tS_Y}(1+1/\mathbf{N})^{½}]$<br>= $\exp[\mathbf{2.433} + (\mathbf{2.431}*\mathbf{0.437})(1+1/\mathbf{38})^{½}]$<br>= **33.427** | One-sided lognormal prediction limit (t is Student's t on N-1 degrees of freedom and 1-alpha confidence level). |

## Worksheet 3

## Magnesium, dissolved (mg/L)

## Normal Prediction Limit

| Step | Equation | Description |
|---|---|---|
| 1 | $\overline{X}$ = **sum[X]** / **N**<br>= **447.7** / **36**<br>= **12.436** | Compute upgradient mean. |
| 2 | S = ( (**sum[X$^2$]** - **sum[X]**$^2$/**N**) / (**N**-1) )$^{½}$<br>= ( (**5662.21** - **200435.29**/**36**) / (**36**-1) )$^{½}$<br>= **1.644** | Compute upgradient sd. |
| 3 | alpha = min[ (1-.95$^{1/K}$)$^{½}$ or .01 ]<br>= min[ (1-.95$^{1/7}$)$^{½}$ or .01 ]<br>= **0.01** | Adjusted per comparison false positive rate. Pass initial or 1 resample. |
| 4 | PL = $\overline{X}$ + **tS**(1+1/**N**)$^{½}$<br>= **12.436** + (**2.438*****1.644**)(1+1/**36**)$^{½}$<br>= **16.498** | One-sided normal prediction limit (t is Student's t on N-1 degrees of freedom and 1-alpha confidence level). |

## Worksheet 4

## Potassium, dissolved (mg/L)

## Nonparametric Prediction Limit

| Step | Equation | Description |
|---|---|---|
| 1 | PL = max(X)<br>= **0.85** | Compute nonparametric prediction limit as largest background measurement. |
| 2 | Confidence = **0.99** | Confidence level is based on N, K and resampling strategy (see Gibbons 1994). |

## Worksheet 5

## Sodium, dissolved (mg/L)

## Normal Prediction Limit

| Step | Equation | Description |
|---|---|---|
| 1 | $\overline{X}$ = **sum[X] / N**<br>= **408.7 / 35**<br>= **11.677** | Compute upgradient mean. |
| 2 | S = ( (**sum[X$^2$]** - **sum[X]**$^2$/**N**) / (**N**-1) )$^{½}$<br>= ( (**4855.89** - **167035.69**/**35**) / (**35**-1) )$^{½}$<br>= **1.567** | Compute upgradient sd. |
| 3 | alpha = min[ (1-.95$^{1/K}$)$^{½}$ or .01 ]<br>= min[ (1-.95$^{1/7}$)$^{½}$ or .01 ]<br>= **0.01** | Adjusted per comparison false positive rate. Pass initial or 1 resample. |
| 4 | PL = $\overline{X}$ + **tS**(1+1/**N**)$^{½}$<br>= **11.677** + (**2.441*****1.567**)(1+1/**35**)$^{½}$<br>= **15.555** | One-sided normal prediction limit (t is Student's t on N-1 degrees of freedom and 1-alpha confidence level). |

## Worksheet 6

## Total dissolved solids (tds) (mg/L)

## Lognormal Prediction Limit

| Step | Equation | Description |
|---|---|---|
| 1 | $Y = \log_e(X)$ | Transform to natural logarithmic scale. |
| 2 | $\overline{Y}$ = **sum[Y]** / **N**<br>= **183.019** / **35**<br>= **5.229** | Compute mean on a natural log scale. |
| 3 | $S_Y = ( (\mathbf{sum[Y^2]} - \mathbf{sum[Y]}^2/\mathbf{N}) / (\mathbf{N}\text{-}1) )^{½}$<br>$= ( (\mathbf{957.968} - \mathbf{33495.803}/\mathbf{35}) / (\mathbf{35}\text{-}1) )^{½}$<br>= **0.167** | Compute sd on a natural log scale. |
| 4 | alpha = min[ $(1\text{-}.95^{1/\mathbf{K}})^{½}$ or .01 ]<br>= min[ $(1\text{-}.95^{1/\mathbf{7}})^{½}$ or .01 ]<br>= **0.01** | Adjusted per comparison false positive rate. Pass initial or 1 resample. |
| 5 | PL = $\exp[\overline{\mathbf{Y}} + \mathbf{tS_Y}(1+1/\mathbf{N})^{½}]$<br>= $\exp[\mathbf{5.229} + (\mathbf{2.441}*\mathbf{0.167})(1+1/\mathbf{35})^{½}]$<br>= **281.958** | One-sided lognormal prediction limit (t is Student's t on N-1 degrees of freedom and 1-alpha confidence level). |

## Worksheet 7

## Total organic carbon (toc) (mg/L)

## Normal Prediction Limit

| Step | Equation | Description |
|---|---|---|
| 1 | $\overline{X}_1 = \mathbf{sum[X_1]} / \mathbf{N_1}$<br>$= \mathbf{28.7} / \mathbf{18}$<br>$= \mathbf{1.594}$ | Compute mean of $N_1$ detected measurements. |
| 2 | $S_1 = ( (\mathbf{sum[X_1^2]} - \mathbf{sum[X_1]}^2/\mathbf{N_1}) / (\mathbf{N_1}-1) )^{½}$<br>$= ( (\mathbf{50.41} - \mathbf{823.69}/\mathbf{18}) / (\mathbf{18}-1) )^{½}$<br>$= \mathbf{0.523}$ | Compute sd of $N_1$ detected measurements. |
| 3 | $\overline{X} = (1 - \mathbf{N_0}/\mathbf{N}) \overline{\mathbf{X}}_\mathbf{1}$<br>$= (1 - \mathbf{16}/\mathbf{34}) \mathbf{1.594}$<br>$= \mathbf{0.844}$ | Compute adjusted mean. |
| 4 | $S = [ (1 - \mathbf{N_0}/\mathbf{N}) * \mathbf{S_1}^2 + (\mathbf{N_0}/\mathbf{N}) ( 1 - (\mathbf{N_0}-1)/(\mathbf{N}-1) ) \overline{\mathbf{X}}_\mathbf{1}^2 ]^{½}$<br>$= [ (1 - \mathbf{16}/\mathbf{34}) * \mathbf{0.523}^2 + (\mathbf{16}/\mathbf{34}) ( 1 - (\mathbf{16}-1)/(\mathbf{34}-1) ) \mathbf{1.594}^2 ]^{½}$<br>$= \mathbf{0.893}$ | Compute adjusted sd. |
| 5 | $\text{alpha} = \min[ (1-.95^{1/\mathbf{K}})^{½} \text{ or } .01 ]$<br>$= \min[ (1-.95^{1/\mathbf{7}})^{½} \text{ or } .01 ]$<br>$= \mathbf{0.01}$ | Adjusted per comparison false positive rate. Pass initial or 1 resample. |
| 6 | $PL = \overline{\mathbf{X}} + \mathbf{tS}(1+1/\mathbf{N})^{½}$<br>$= \mathbf{0.844} + (\mathbf{2.445}*\mathbf{0.893})(1+1/\mathbf{34})^{½}$<br>$= \mathbf{3.059}$ | One-sided normal prediction limit (t is Student's t on N-1 degrees of freedom and 1-alpha confidence level). |

**MW-15A**

# Table 1

## Upgradient Data

| Constituent | Units | Well | Date | | Result | |
|---|---|---|---|---|---|---|
| Alkalinity, bicarbonate (as caco3) | mg/L | MW-15A | 04/01/1997 | | 70.3000 | |
| Alkalinity, bicarbonate (as caco3) | mg/L | MW-15A | 05/19/1997 | | 110.0000 | |
| Alkalinity, bicarbonate (as caco3) | mg/L | MW-15A | 09/25/1997 | | 99.8000 | |
| Alkalinity, bicarbonate (as caco3) | mg/L | MW-15A | 12/19/1997 | | 36.2000 | |
| Alkalinity, bicarbonate (as caco3) | mg/L | MW-15A | 03/18/1998 | | 55.7000 | |
| Alkalinity, bicarbonate (as caco3) | mg/L | MW-15A | 06/11/1998 | | 48.0000 | |
| Alkalinity, bicarbonate (as caco3) | mg/L | MW-15A | 08/20/1998 | | 53.2000 | |
| Alkalinity, bicarbonate (as caco3) | mg/L | MW-15A | 12/17/1998 | | 50.0000 | |
| Alkalinity, bicarbonate (as caco3) | mg/L | MW-15A | 03/26/1999 | | 52.5000 | |
| Alkalinity, bicarbonate (as caco3) | mg/L | MW-15A | 06/18/1999 | | 54.0000 | |
| Alkalinity, bicarbonate (as caco3) | mg/L | MW-15A | 12/13/1999 | | 27.0000 | |
| Alkalinity, bicarbonate (as caco3) | mg/L | MW-15A | 02/08/2000 | | 55.2000 | |
| Alkalinity, bicarbonate (as caco3) | mg/L | MW-15A | 05/24/2000 | | 41.7000 | |
| Alkalinity, bicarbonate (as caco3) | mg/L | MW-15A | 01/30/2001 | | 64.0000 | |
| Alkalinity, bicarbonate (as caco3) | mg/L | MW-15A | 04/24/2001 | | 33.0000 | |
| Alkalinity, bicarbonate (as caco3) | mg/L | MW-15A | 08/29/2001 | | 38.4000 | |
| Alkalinity, bicarbonate (as caco3) | mg/L | MW-15A | 01/31/2002 | | 45.7000 | |
| Alkalinity, bicarbonate (as caco3) | mg/L | MW-15A | 04/09/2002 | | 32.8000 | |
| Alkalinity, bicarbonate (as caco3) | mg/L | MW-15A | 07/23/2002 | | 40.0000 | |
| Alkalinity, bicarbonate (as caco3) | mg/L | MW-15A | 02/25/2003 | | 42.0000 | |
| Alkalinity, bicarbonate (as caco3) | mg/L | MW-15A | 05/13/2003 | | 39.0000 | |
| Alkalinity, bicarbonate (as caco3) | mg/L | MW-15A | 08/20/2003 | | 28.0000 | |
| Alkalinity, bicarbonate (as caco3) | mg/L | MW-15A | 04/20/2004 | | 17.0000 | |
| Alkalinity, bicarbonate (as caco3) | mg/L | MW-15A | 05/24/2005 | | 23.0000 | |
| Alkalinity, bicarbonate (as caco3) | mg/L | MW-15A | 10/26/2005 | | 13.0000 | |
| Alkalinity, bicarbonate (as caco3) | mg/L | MW-15A | 05/09/2006 | | 16.0000 | |
| Alkalinity, bicarbonate (as caco3) | mg/L | MW-15A | 11/22/2006 | | 22.0000 | |
| Alkalinity, bicarbonate (as caco3) | mg/L | MW-15A | 05/08/2007 | | 25.0000 | |
| Alkalinity, bicarbonate (as caco3) | mg/L | MW-15A | 11/08/2007 | | 12.0000 | |
| Alkalinity, bicarbonate (as caco3) | mg/L | MW-15A | 05/20/2008 | | 29.0000 | |
| Alkalinity, bicarbonate (as caco3) | mg/L | MW-15A | 11/12/2008 | | 8.6000 | |
| Alkalinity, bicarbonate (as caco3) | mg/L | MW-15A | 05/05/2009 | | 28.0000 | |
| Alkalinity, bicarbonate (as caco3) | mg/L | MW-15A | 11/17/2009 | | 24.0000 | |
| Alkalinity, bicarbonate (as caco3) | mg/L | MW-15A | 04/20/2010 | | 14.0000 | |
| Alkalinity, bicarbonate (as caco3) | mg/L | MW-15A | 10/06/2010 | | 16.0000 | |
| Alkalinity, bicarbonate (as caco3) | mg/L | MW-15A | 04/14/2011 | | 21.0000 | |
| Alkalinity, bicarbonate (as caco3) | mg/L | MW-15A | 11/03/2011 | | 12.0000 | |
| Alkalinity, bicarbonate (as caco3) | mg/L | MW-15A | 05/02/2012 | | 24.0000 | |
| Alkalinity, bicarbonate (as caco3) | mg/L | MW-15A | 11/13/2012 | | 24.0000 | |
| Chloride | mg/L | MW-15A | 04/01/1997 | | 16.4000 | |
| Chloride | mg/L | MW-15A | 05/19/1997 | | 13.8000 | |
| Chloride | mg/L | MW-15A | 09/25/1997 | | 13.3000 | |
| Chloride | mg/L | MW-15A | 12/19/1997 | | 13.6000 | |
| Chloride | mg/L | MW-15A | 03/18/1998 | | 12.4000 | |

* - Outlier for that well and constituent.
ND = Not detected, result = detection limit.

# Table 1

## Upgradient Data

| Constituent | Units | Well | Date | | Result | |
|---|---|---|---|---|---|---|
| Chloride | mg/L | MW-15A | 06/11/1998 | | 13.2000 | |
| Chloride | mg/L | MW-15A | 08/20/1998 | | 13.5000 | |
| Chloride | mg/L | MW-15A | 12/17/1998 | | 11.0000 | |
| Chloride | mg/L | MW-15A | 03/26/1999 | | 12.0000 | |
| Chloride | mg/L | MW-15A | 06/18/1999 | | 12.0000 | |
| Chloride | mg/L | MW-15A | 12/13/1999 | | 8.3000 | |
| Chloride | mg/L | MW-15A | 02/08/2000 | | 10.5000 | |
| Chloride | mg/L | MW-15A | 05/24/2000 | | 12.4000 | |
| Chloride | mg/L | MW-15A | 01/30/2001 | | 6.8000 | |
| Chloride | mg/L | MW-15A | 04/24/2001 | | 5.3000 | |
| Chloride | mg/L | MW-15A | 08/29/2001 | | 5.8000 | |
| Chloride | mg/L | MW-15A | 01/31/2002 | | 7.5000 | |
| Chloride | mg/L | MW-15A | 04/09/2002 | | 7.0000 | |
| Chloride | mg/L | MW-15A | 07/23/2002 | | 6.9000 | |
| Chloride | mg/L | MW-15A | 02/25/2003 | | 6.2000 | |
| Chloride | mg/L | MW-15A | 05/13/2003 | | 6.4000 | |
| Chloride | mg/L | MW-15A | 08/20/2003 | | 6.4000 | |
| Chloride | mg/L | MW-15A | 04/20/2004 | | 6.1000 | |
| Chloride | mg/L | MW-15A | 05/24/2005 | | 5.8000 | |
| Chloride | mg/L | MW-15A | 10/26/2005 | | 8.0000 | |
| Chloride | mg/L | MW-15A | 05/09/2006 | | 7.0000 | |
| Chloride | mg/L | MW-15A | 11/22/2006 | | 7.1000 | |
| Chloride | mg/L | MW-15A | 05/08/2007 | | 6.5000 | |
| Chloride | mg/L | MW-15A | 11/08/2007 | | 7.9000 | |
| Chloride | mg/L | MW-15A | 05/20/2008 | | 6.7000 | |
| Chloride | mg/L | MW-15A | 11/12/2008 | | 9.5000 | |
| Chloride | mg/L | MW-15A | 05/05/2009 | | 8.5000 | |
| Chloride | mg/L | MW-15A | 11/17/2009 | | 9.0000 | |
| Chloride | mg/L | MW-15A | 04/20/2010 | | 6.3000 | |
| Chloride | mg/L | MW-15A | 10/06/2010 | | 6.1000 | |
| Chloride | mg/L | MW-15A | 04/14/2011 | | 5.1000 | |
| Chloride | mg/L | MW-15A | 11/03/2011 | | 5.0000 | |
| Chloride | mg/L | MW-15A | 05/02/2012 | | 4.0000 | |
| Chloride | mg/L | MW-15A | 11/13/2012 | | 4.5000 | |
| Magnesium, dissolved | mg/L | MW-15A | 04/01/1997 | | 7.4000 | |
| Magnesium, dissolved | mg/L | MW-15A | 05/19/1997 | | 7.6000 | |
| Magnesium, dissolved | mg/L | MW-15A | 09/12/1997 | | 9.4000 | |
| Magnesium, dissolved | mg/L | MW-15A | 12/19/1997 | | 7.2000 | |
| Magnesium, dissolved | mg/L | MW-15A | 03/18/1998 | | 7.1000 | |
| Magnesium, dissolved | mg/L | MW-15A | 06/11/1998 | | 6.5000 | |
| Magnesium, dissolved | mg/L | MW-15A | 08/20/1998 | | 6.9000 | |
| Magnesium, dissolved | mg/L | MW-15A | 12/17/1998 | | 6.4700 | |
| Magnesium, dissolved | mg/L | MW-15A | 03/26/1999 | | 8.0000 | |
| Magnesium, dissolved | mg/L | MW-15A | 06/18/1999 | | 7.4000 | |

* - Outlier for that well and constituent.
ND = Not detected, result = detection limit.

# Table 1

## Upgradient Data

| Constituent | Units | Well | Date | | Result | |
|---|---|---|---|---|---|---|
| Magnesium, dissolved | mg/L | MW-15A | 09/15/1999 | | 6.1000 | |
| Magnesium, dissolved | mg/L | MW-15A | 12/13/1999 | | 4.8000 | |
| Magnesium, dissolved | mg/L | MW-15A | 02/08/2000 | | 7.5000 | |
| Magnesium, dissolved | mg/L | MW-15A | 05/24/2000 | | 7.7000 | |
| Magnesium, dissolved | mg/L | MW-15A | 01/30/2001 | | 5.1000 | |
| Magnesium, dissolved | mg/L | MW-15A | 04/24/2001 | | 4.0000 | |
| Magnesium, dissolved | mg/L | MW-15A | 08/29/2001 | | 3.8000 | |
| Magnesium, dissolved | mg/L | MW-15A | 01/31/2002 | | 5.2000 | |
| Magnesium, dissolved | mg/L | MW-15A | 04/09/2002 | | 4.8000 | |
| Magnesium, dissolved | mg/L | MW-15A | 07/23/2002 | | 4.5000 | |
| Magnesium, dissolved | mg/L | MW-15A | 02/25/2003 | | 3.4000 | |
| Magnesium, dissolved | mg/L | MW-15A | 05/13/2003 | | 5.7000 | |
| Magnesium, dissolved | mg/L | MW-15A | 08/20/2003 | | 3.9000 | |
| Magnesium, dissolved | mg/L | MW-15A | 04/20/2004 | | 3.3000 | |
| Magnesium, dissolved | mg/L | MW-15A | 05/24/2005 | | 2.6000 | |
| Magnesium, dissolved | mg/L | MW-15A | 10/26/2005 | | 2.6000 | |
| Magnesium, dissolved | mg/L | MW-15A | 05/09/2006 | | 2.6000 | |
| Magnesium, dissolved | mg/L | MW-15A | 11/22/2006 | | 3.1000 | |
| Magnesium, dissolved | mg/L | MW-15A | 05/08/2007 | | 2.8000 | |
| Magnesium, dissolved | mg/L | MW-15A | 11/08/2007 | | 2.8000 | |
| Magnesium, dissolved | mg/L | MW-15A | 05/20/2008 | | 3.0000 | |
| Magnesium, dissolved | mg/L | MW-15A | 11/12/2008 | | 4.5000 | |
| Magnesium, dissolved | mg/L | MW-15A | 05/05/2009 | | 2.0000 | |
| Magnesium, dissolved | mg/L | MW-15A | 11/17/2009 | | 2.3000 | |
| Magnesium, dissolved | mg/L | MW-15A | 04/20/2010 | | 3.4000 | |
| Magnesium, dissolved | mg/L | MW-15A | 10/06/2010 | | 3.8000 | |
| Magnesium, dissolved | mg/L | MW-15A | 04/14/2011 | | 3.3000 | |
| Magnesium, dissolved | mg/L | MW-15A | 11/03/2011 | | 3.5000 | |
| Magnesium, dissolved | mg/L | MW-15A | 05/02/2012 | | 3.9000 | |
| Magnesium, dissolved | mg/L | MW-15A | 11/13/2012 | | 7.6000 | |
| Potassium, dissolved | mg/L | MW-15A | 04/01/1997 | | 1.0000 | |
| Potassium, dissolved | mg/L | MW-15A | 05/19/1997 | | 0.6800 | |
| Potassium, dissolved | mg/L | MW-15A | 09/12/1997 | | 0.8400 | |
| Potassium, dissolved | mg/L | MW-15A | 12/19/1997 | | 0.7200 | |
| Potassium, dissolved | mg/L | MW-15A | 03/18/1998 | | 0.4200 | |
| Potassium, dissolved | mg/L | MW-15A | 06/11/1998 | | 0.4400 | |
| Potassium, dissolved | mg/L | MW-15A | 08/20/1998 | | 0.4500 | |
| Potassium, dissolved | mg/L | MW-15A | 12/17/1998 | ND | 2.0000 | * |
| Potassium, dissolved | mg/L | MW-15A | 03/26/1999 | | 0.2800 | |
| Potassium, dissolved | mg/L | MW-15A | 06/18/1999 | | 0.3300 | |
| Potassium, dissolved | mg/L | MW-15A | 09/15/1999 | | 0.2800 | |
| Potassium, dissolved | mg/L | MW-15A | 12/13/1999 | | 0.5800 | |
| Potassium, dissolved | mg/L | MW-15A | 02/08/2000 | ND | 0.2500 | |
| Potassium, dissolved | mg/L | MW-15A | 05/24/2000 | ND | 0.4300 | |

* - Outlier for that well and constituent.
ND = Not detected, result = detection limit.

# Table 1

## Upgradient Data

| Constituent | Units | Well | Date | | Result | |
|---|---|---|---|---|---|---|
| Potassium, dissolved | mg/L | MW-15A | 01/30/2001 | ND | 0.5000 | |
| Potassium, dissolved | mg/L | MW-15A | 04/24/2001 | ND | 0.5000 | |
| Potassium, dissolved | mg/L | MW-15A | 08/29/2001 | ND | 0.5000 | |
| Potassium, dissolved | mg/L | MW-15A | 01/31/2002 | ND | 0.5000 | |
| Potassium, dissolved | mg/L | MW-15A | 04/09/2002 | ND | 0.5000 | |
| Potassium, dissolved | mg/L | MW-15A | 07/23/2002 | ND | 0.5000 | |
| Potassium, dissolved | mg/L | MW-15A | 02/25/2003 | ND | 0.5000 | |
| Potassium, dissolved | mg/L | MW-15A | 05/13/2003 | ND | 0.5000 | |
| Potassium, dissolved | mg/L | MW-15A | 08/20/2003 | | 0.5200 | |
| Potassium, dissolved | mg/L | MW-15A | 04/20/2004 | ND | 0.5000 | |
| Potassium, dissolved | mg/L | MW-15A | 05/24/2005 | ND | 0.5000 | |
| Potassium, dissolved | mg/L | MW-15A | 10/26/2005 | ND | 0.5000 | |
| Potassium, dissolved | mg/L | MW-15A | 05/09/2006 | ND | 0.5000 | |
| Potassium, dissolved | mg/L | MW-15A | 11/22/2006 | ND | 0.5000 | |
| Potassium, dissolved | mg/L | MW-15A | 05/08/2007 | ND | 0.5000 | |
| Potassium, dissolved | mg/L | MW-15A | 11/08/2007 | ND | 0.5000 | |
| Potassium, dissolved | mg/L | MW-15A | 05/20/2008 | ND | 0.5000 | |
| Potassium, dissolved | mg/L | MW-15A | 11/12/2008 | | 0.9600 | |
| Potassium, dissolved | mg/L | MW-15A | 01/06/2009 | ND | 0.5000 | |
| Potassium, dissolved | mg/L | MW-15A | 05/05/2009 | ND | 0.5000 | |
| Potassium, dissolved | mg/L | MW-15A | 11/17/2009 | ND | 0.5000 | |
| Potassium, dissolved | mg/L | MW-15A | 04/20/2010 | ND | 0.5000 | |
| Potassium, dissolved | mg/L | MW-15A | 10/06/2010 | ND | 0.5000 | |
| Potassium, dissolved | mg/L | MW-15A | 04/14/2011 | ND | 0.5000 | |
| Potassium, dissolved | mg/L | MW-15A | 11/03/2011 | ND | 0.5000 | |
| Potassium, dissolved | mg/L | MW-15A | 05/02/2012 | ND | 0.5000 | |
| Potassium, dissolved | mg/L | MW-15A | 11/13/2012 | | 1.4000 | |
| Potassium, dissolved | mg/L | MW-15A | 01/07/2013 | ND | 0.5000 | |
| Sodium, dissolved | mg/L | MW-15A | 04/01/1997 | | 24.8000 | |
| Sodium, dissolved | mg/L | MW-15A | 05/19/1997 | | 25.9000 | |
| Sodium, dissolved | mg/L | MW-15A | 09/12/1997 | | 24.4000 | |
| Sodium, dissolved | mg/L | MW-15A | 12/19/1997 | | 20.8000 | |
| Sodium, dissolved | mg/L | MW-15A | 03/18/1998 | | 21.6000 | |
| Sodium, dissolved | mg/L | MW-15A | 06/11/1998 | | 18.9000 | |
| Sodium, dissolved | mg/L | MW-15A | 08/20/1998 | | 18.0000 | |
| Sodium, dissolved | mg/L | MW-15A | 12/17/1998 | | 18.1000 | |
| Sodium, dissolved | mg/L | MW-15A | 03/26/1999 | | 19.2000 | |
| Sodium, dissolved | mg/L | MW-15A | 06/18/1999 | | 18.6000 | |
| Sodium, dissolved | mg/L | MW-15A | 09/15/1999 | | 16.0000 | |
| Sodium, dissolved | mg/L | MW-15A | 12/13/1999 | | 38.7000 | * |
| Sodium, dissolved | mg/L | MW-15A | 02/08/2000 | | 23.2000 | |
| Sodium, dissolved | mg/L | MW-15A | 05/24/2000 | | 20.3000 | |
| Sodium, dissolved | mg/L | MW-15A | 01/30/2001 | | 27.9000 | |
| Sodium, dissolved | mg/L | MW-15A | 04/24/2001 | | 19.5000 | |

* - Outlier for that well and constituent.
ND = Not detected, result = detection limit.

# Table 1

## Upgradient Data

| Constituent | Units | Well | Date | | Result | |
|---|---|---|---|---|---|---|
| Sodium, dissolved | mg/L | MW-15A | 08/29/2001 | | 15.3000 | |
| Sodium, dissolved | mg/L | MW-15A | 01/31/2002 | | 25.0000 | |
| Sodium, dissolved | mg/L | MW-15A | 04/09/2002 | | 24.6000 | |
| Sodium, dissolved | mg/L | MW-15A | 07/23/2002 | | 19.7000 | |
| Sodium, dissolved | mg/L | MW-15A | 02/25/2003 | | 31.0000 | |
| Sodium, dissolved | mg/L | MW-15A | 05/13/2003 | | 22.0000 | |
| Sodium, dissolved | mg/L | MW-15A | 08/20/2003 | | 20.0000 | |
| Sodium, dissolved | mg/L | MW-15A | 04/20/2004 | | 18.0000 | |
| Sodium, dissolved | mg/L | MW-15A | 05/24/2005 | | 19.0000 | |
| Sodium, dissolved | mg/L | MW-15A | 10/26/2005 | | 14.0000 | |
| Sodium, dissolved | mg/L | MW-15A | 05/09/2006 | | 17.0000 | |
| Sodium, dissolved | mg/L | MW-15A | 11/22/2006 | | 22.0000 | |
| Sodium, dissolved | mg/L | MW-15A | 05/08/2007 | | 18.0000 | |
| Sodium, dissolved | mg/L | MW-15A | 11/08/2007 | | 15.0000 | |
| Sodium, dissolved | mg/L | MW-15A | 05/20/2008 | | 21.0000 | |
| Sodium, dissolved | mg/L | MW-15A | 11/12/2008 | | 14.0000 | |
| Sodium, dissolved | mg/L | MW-15A | 05/05/2009 | | 18.0000 | |
| Sodium, dissolved | mg/L | MW-15A | 11/17/2009 | | 18.0000 | |
| Sodium, dissolved | mg/L | MW-15A | 04/20/2010 | | 22.0000 | |
| Sodium, dissolved | mg/L | MW-15A | 10/06/2010 | | 16.0000 | |
| Sodium, dissolved | mg/L | MW-15A | 04/14/2011 | | 24.0000 | |
| Sodium, dissolved | mg/L | MW-15A | 11/03/2011 | | 17.0000 | |
| Sodium, dissolved | mg/L | MW-15A | 05/02/2012 | | 20.0000 | |
| Sodium, dissolved | mg/L | MW-15A | 11/13/2012 | | 17.0000 | |
| Total dissolved solids (tds) | mg/L | MW-15A | 04/01/1997 | | 165.0000 | |
| Total dissolved solids (tds) | mg/L | MW-15A | 05/19/1997 | | 173.0000 | |
| Total dissolved solids (tds) | mg/L | MW-15A | 09/25/1997 | | 211.0000 | |
| Total dissolved solids (tds) | mg/L | MW-15A | 12/19/1997 | | 191.0000 | |
| Total dissolved solids (tds) | mg/L | MW-15A | 03/18/1998 | | 163.0000 | |
| Total dissolved solids (tds) | mg/L | MW-15A | 06/11/1998 | | 199.0000 | |
| Total dissolved solids (tds) | mg/L | MW-15A | 08/20/1998 | | 575.0000 | * |
| Total dissolved solids (tds) | mg/L | MW-15A | 12/17/1998 | | 137.0000 | |
| Total dissolved solids (tds) | mg/L | MW-15A | 03/26/1999 | | 162.0000 | |
| Total dissolved solids (tds) | mg/L | MW-15A | 06/18/1999 | | 210.0000 | |
| Total dissolved solids (tds) | mg/L | MW-15A | 12/13/1999 | | 181.0000 | |
| Total dissolved solids (tds) | mg/L | MW-15A | 02/08/2000 | | 168.0000 | |
| Total dissolved solids (tds) | mg/L | MW-15A | 05/24/2000 | | 213.0000 | |
| Total dissolved solids (tds) | mg/L | MW-15A | 01/30/2001 | | 169.0000 | |
| Total dissolved solids (tds) | mg/L | MW-15A | 04/24/2001 | | 180.0000 | |
| Total dissolved solids (tds) | mg/L | MW-15A | 07/11/2001 | | 119.0000 | |
| Total dissolved solids (tds) | mg/L | MW-15A | 08/29/2001 | | 181.0000 | |
| Total dissolved solids (tds) | mg/L | MW-15A | 01/31/2002 | | 116.0000 | |
| Total dissolved solids (tds) | mg/L | MW-15A | 04/09/2002 | | 258.0000 | |
| Total dissolved solids (tds) | mg/L | MW-15A | 07/23/2002 | | 197.0000 | |

* - Outlier for that well and constituent.
ND = Not detected, result = detection limit.

# Table 1

## Upgradient Data

| Constituent | Units | Well | Date | | Result | |
|---|---|---|---|---|---|---|
| Total dissolved solids (tds) | mg/L | MW-15A | 02/25/2003 | | 180.0000 | |
| Total dissolved solids (tds) | mg/L | MW-15A | 05/13/2003 | | 230.0000 | |
| Total dissolved solids (tds) | mg/L | MW-15A | 08/20/2003 | | 180.0000 | |
| Total dissolved solids (tds) | mg/L | MW-15A | 04/20/2004 | | 210.0000 | |
| Total dissolved solids (tds) | mg/L | MW-15A | 05/24/2005 | | 180.0000 | |
| Total dissolved solids (tds) | mg/L | MW-15A | 10/26/2005 | | 160.0000 | |
| Total dissolved solids (tds) | mg/L | MW-15A | 05/09/2006 | | 200.0000 | |
| Total dissolved solids (tds) | mg/L | MW-15A | 11/22/2006 | | 150.0000 | |
| Total dissolved solids (tds) | mg/L | MW-15A | 05/08/2007 | | 150.0000 | |
| Total dissolved solids (tds) | mg/L | MW-15A | 11/08/2007 | | 200.0000 | |
| Total dissolved solids (tds) | mg/L | MW-15A | 05/20/2008 | | 220.0000 | |
| Total dissolved solids (tds) | mg/L | MW-15A | 11/12/2008 | | 290.0000 | |
| Total dissolved solids (tds) | mg/L | MW-15A | 01/06/2009 | | 160.0000 | |
| Total dissolved solids (tds) | mg/L | MW-15A | 05/05/2009 | | 180.0000 | |
| Total dissolved solids (tds) | mg/L | MW-15A | 11/17/2009 | | 120.0000 | |
| Total dissolved solids (tds) | mg/L | MW-15A | 04/20/2010 | | 170.0000 | |
| Total dissolved solids (tds) | mg/L | MW-15A | 10/06/2010 | | 170.0000 | |
| Total dissolved solids (tds) | mg/L | MW-15A | 04/14/2011 | | 160.0000 | |
| Total dissolved solids (tds) | mg/L | MW-15A | 11/03/2011 | | 400.0000 | |
| Total dissolved solids (tds) | mg/L | MW-15A | 05/02/2012 | | 180.0000 | |
| Total dissolved solids (tds) | mg/L | MW-15A | 11/13/2012 | | 350.0000 | |
| Total dissolved solids (tds) | mg/L | MW-15A | 01/07/2013 | | 290.0000 | |
| Total organic carbon (toc) | mg/L | MW-15A | 04/01/1997 | | 4.3000 | * |
| Total organic carbon (toc) | mg/L | MW-15A | 05/19/1997 | | 1.1000 | |
| Total organic carbon (toc) | mg/L | MW-15A | 09/11/1997 | ND | 1.0000 | |
| Total organic carbon (toc) | mg/L | MW-15A | 12/19/1997 | ND | 1.0000 | |
| Total organic carbon (toc) | mg/L | MW-15A | 03/18/1998 | ND | 1.0000 | |
| Total organic carbon (toc) | mg/L | MW-15A | 06/11/1998 | ND | 1.0000 | |
| Total organic carbon (toc) | mg/L | MW-15A | 08/20/1998 | ND | 1.0000 | |
| Total organic carbon (toc) | mg/L | MW-15A | 12/17/1998 | | 0.5000 | |
| Total organic carbon (toc) | mg/L | MW-15A | 03/26/1999 | ND | 1.0000 | |
| Total organic carbon (toc) | mg/L | MW-15A | 06/18/1999 | ND | 1.0000 | |
| Total organic carbon (toc) | mg/L | MW-15A | 12/13/1999 | | 2.1000 | |
| Total organic carbon (toc) | mg/L | MW-15A | 02/08/2000 | | 1.1000 | |
| Total organic carbon (toc) | mg/L | MW-15A | 05/24/2000 | ND | 1.0000 | |
| Total organic carbon (toc) | mg/L | MW-15A | 01/30/2001 | | 1.2000 | |
| Total organic carbon (toc) | mg/L | MW-15A | 04/24/2001 | ND | 1.0000 | |
| Total organic carbon (toc) | mg/L | MW-15A | 08/29/2001 | ND | 1.0000 | |
| Total organic carbon (toc) | mg/L | MW-15A | 01/31/2002 | ND | 1.0000 | |
| Total organic carbon (toc) | mg/L | MW-15A | 04/09/2002 | ND | 1.0000 | |
| Total organic carbon (toc) | mg/L | MW-15A | 07/23/2002 | ND | 1.0000 | |
| Total organic carbon (toc) | mg/L | MW-15A | 02/25/2003 | | 1.6000 | |
| Total organic carbon (toc) | mg/L | MW-15A | 05/13/2003 | | 1.0000 | |
| Total organic carbon (toc) | mg/L | MW-15A | 08/20/2003 | | 1.4000 | |

* - Outlier for that well and constituent.
ND = Not detected, result = detection limit.

# Table 1

## Upgradient Data

| Constituent | Units | Well | Date | | Result | |
|---|---|---|---|---|---|---|
| Total organic carbon (toc) | mg/L | MW-15A | 04/20/2004 | | 1.2000 | |
| Total organic carbon (toc) | mg/L | MW-15A | 05/24/2005 | ND | 1.0000 | |
| Total organic carbon (toc) | mg/L | MW-15A | 10/26/2005 | ND | 1.0000 | |
| Total organic carbon (toc) | mg/L | MW-15A | 05/09/2006 | ND | 1.0000 | |
| Total organic carbon (toc) | mg/L | MW-15A | 11/22/2006 | | 30.0000 | * |
| Total organic carbon (toc) | mg/L | MW-15A | 05/08/2007 | | 1.1000 | |
| Total organic carbon (toc) | mg/L | MW-15A | 11/08/2007 | | 2.2000 | |
| Total organic carbon (toc) | mg/L | MW-15A | 05/20/2008 | ND | 1.0000 | |
| Total organic carbon (toc) | mg/L | MW-15A | 11/12/2008 | | 3.6000 | |
| Total organic carbon (toc) | mg/L | MW-15A | 01/06/2009 | ND | 1.0000 | |
| Total organic carbon (toc) | mg/L | MW-15A | 05/05/2009 | | 1.2000 | |
| Total organic carbon (toc) | mg/L | MW-15A | 11/17/2009 | ND | 1.0000 | |
| Total organic carbon (toc) | mg/L | MW-15A | 04/20/2010 | ND | 1.0000 | |
| Total organic carbon (toc) | mg/L | MW-15A | 10/06/2010 | ND | 1.0000 | |
| Total organic carbon (toc) | mg/L | MW-15A | 04/14/2011 | ND | 1.0000 | |
| Total organic carbon (toc) | mg/L | MW-15A | 11/03/2011 | | 1.1000 | |
| Total organic carbon (toc) | mg/L | MW-15A | 05/02/2012 | | 1.0000 | |
| Total organic carbon (toc) | mg/L | MW-15A | 11/13/2012 | | 1.3000 | |

* - Outlier for that well and constituent.
ND = Not detected, result = detection limit.

# Table 2

## Shapiro Wilk Test of Normality for Multiple Groups

| Constituent | N (Detects) | Detect Freq | G raw | G log | Critical Value | Limit Type |
|---|---|---|---|---|---|---|
| Alkalinity, bicarbonate (as caco3) | 39 | 1.000 | 3.198 | 0.998 | 2.326 | lognor |
| Chloride | 39 | 1.000 | 2.815 | 1.600 | 2.326 | lognor |
| Magnesium, dissolved | 40 | 1.000 | 2.378 | 1.745 | 2.326 | lognor |
| Potassium, dissolved | 14 | 0.341 | 0.977 | 0.154 | 2.326 | nonpar |
| Sodium, dissolved | 39 | 1.000 | 0.808 | 0.804 | 2.326 | normal |
| Total dissolved solids (tds) | 41 | 1.000 | 4.265 | 2.158 | 2.326 | lognor |
| Total organic carbon (toc) | 16 | 0.421 | 3.355 | 2.100 | 2.326 | nonpar |

Fit to distribution is confirmed if G < critical value.
If detection frequency is < 50% nonparametric or Poisson limit is used

# Table 3

## Summary Statistics and Prediction Limits

| Constituent | Units | Model Type | N | Detect | Mean | SD | Pred Limit | Conf* |
|---|---|---|---|---|---|---|---|---|
| Alkalinity, bicarbonate (as caco3) | mg/L | lognor | 39 | 39 | 3.4455 | 0.5933 | 134.9059 | |
| Chloride | mg/L | lognor | 39 | 39 | 2.0822 | 0.3617 | 19.5242 | |
| Magnesium, dissolved | mg/L | lognor | 40 | 40 | 1.5140 | 0.4183 | 12.6964 | |
| Potassium, dissolved | mg/L | nonpar | 41 | 14 | | | 1.0000 | 0.99 |
| Sodium, dissolved | mg/L | normal | 39 | 39 | 20.1231 | 3.8236 | 29.5269 | |
| Total dissolved solids (tds) | mg/L | lognor | 41 | 41 | 5.2296 | 0.2555 | 349.4132 | |
| Total organic carbon (toc) | mg/L | nonpar | 38 | 16 | | | 2.2000 | 0.99 |

* - Confidence level for passing initial test or one verification resample at all downgradient wells for a single constituent (nonparametric test only).
Model Type refers to type of prediction limit.
For lognormal limit, mean and sd in natural log units and prediction limit in original units.
All sample sizes and statistics are based on outlier free data.
For nonparametric limits, median reporting limits are substituted for extreme reporting limit values.

## Worksheet 1

## Alkalinity, bicarbonate (as caco3) (mg/L)

## Lognormal Prediction Limit

| Step | Equation | Description |
|---|---|---|
| 1 | $Y = \log_e(X)$ | Transform to natural logarithmic scale. |
| 2 | $\overline{Y}$ = **sum[Y]** / **N**<br>= **134.376** / **39**<br>= **3.446** | Compute mean on a natural log scale. |
| 3 | $S_Y = ( (\textbf{sum[Y}^2\textbf{]} - \textbf{sum[Y]}^2/\textbf{N}) / (\textbf{N}-1) )^{½}$<br>$= ( (\textbf{476.37} - \textbf{18056.829}/\textbf{39}) / (\textbf{39}-1) )^{½}$<br>= **0.593** | Compute sd on a natural log scale. |
| 4 | alpha = min[ $(1-.95^{1/\textbf{K}})^{½}$ or .01 ]<br>= min[ $(1-.95^{1/\textbf{7}})^{½}$ or .01 ]<br>= **0.01** | Adjusted per comparison false positive rate. Pass initial or 1 resample. |
| 5 | $PL = \exp[\overline{\textbf{Y}} + \textbf{tS}_{\textbf{Y}}(1+1/\textbf{N})^{½}]$<br>$= \exp[\textbf{3.446} + (\textbf{2.428}*\textbf{0.593})(1+1/\textbf{39})^{½}]$<br>= **134.906** | One-sided lognormal prediction limit (t is Student's t on N-1 degrees of freedom and 1-alpha confidence level). |

## Worksheet 2

## Chloride (mg/L)

## Lognormal Prediction Limit

| Step | Equation | Description |
|---|---|---|
| 1 | $Y = \log_e(X)$ | Transform to natural logarithmic scale. |
| 2 | $\overline{Y}$ = **sum[Y]** / **N**<br>= **81.204** / **39**<br>= **2.082** | Compute mean on a natural log scale. |
| 3 | $S_Y = ( (\mathbf{sum[Y^2]} - \mathbf{sum[Y]}^2/\mathbf{N}) / (\mathbf{N}-1) )^{1/2}$<br>$= ( (\mathbf{174.051} - \mathbf{6594.126}/\mathbf{39}) / (\mathbf{39}-1) )^{1/2}$<br>= **0.362** | Compute sd on a natural log scale. |
| 4 | alpha = min[ $(1-.95^{1/\mathbf{K}})^{1/2}$ or .01 ]<br>= min[ $(1-.95^{1/\mathbf{7}})^{1/2}$ or .01 ]<br>= **0.01** | Adjusted per comparison false positive rate. Pass initial or 1 resample. |
| 5 | $PL = \exp[\overline{\mathbf{Y}} + \mathbf{tS_Y}(1+1/\mathbf{N})^{1/2}]$<br>$= \exp[\mathbf{2.082} + (\mathbf{2.428}*\mathbf{0.362})(1+1/\mathbf{39})^{1/2}]$<br>= **19.524** | One-sided lognormal prediction limit (t is Student's t on N-1 degrees of freedom and 1-alpha confidence level). |

## Worksheet 3

## Magnesium, dissolved (mg/L)

## Lognormal Prediction Limit

| Step | Equation | Description |
|---|---|---|
| 1 | $Y = \log_e(X)$ | Transform to natural logarithmic scale. |
| 2 | $\overline{Y}$ = **sum[Y]** / **N**<br>= **60.56** / **40**<br>= **1.514** | Compute mean on a natural log scale. |
| 3 | $S_Y = ( (\mathbf{sum[Y^2]} - \mathbf{sum[Y]}^2/\mathbf{N}) / (\mathbf{N}-1) )^{½}$<br>$= ( (\mathbf{98.514} - \mathbf{3667.574}/\mathbf{40}) / (\mathbf{40}-1) )^{½}$<br>= **0.418** | Compute sd on a natural log scale. |
| 4 | alpha = min[ $(1-.95^{1/\mathbf{K}})^{½}$ or .01 ]<br>= min[ $(1-.95^{1/\mathbf{7}})^{½}$ or .01 ]<br>= **0.01** | Adjusted per comparison false positive rate. Pass initial or 1 resample. |
| 5 | PL = $\exp[\overline{\mathbf{Y}} + \mathbf{tS_Y}(1+1/\mathbf{N})^{½}]$<br>= $\exp[\mathbf{1.514} + (\mathbf{2.426}*\mathbf{0.418})(1+1/\mathbf{40})^{½}]$<br>= **12.696** | One-sided lognormal prediction limit (t is Student's t on N-1 degrees of freedom and 1-alpha confidence level). |

## Worksheet 4

## Potassium, dissolved (mg/L)

## Nonparametric Prediction Limit

| Step | Equation | Description |
|---|---|---|
| 1 | PL = 2nd max(X)<br>= **1.0** | Compute nonparametric prediction limit as 2nd largest background det value. |
| 2 | Confidence = **0.99** | Confidence level is based on N, K and resampling strategy (see Gibbons 1994). |

## Worksheet 5

## Sodium, dissolved (mg/L)

## Normal Prediction Limit

| Step | Equation | Description |
|---|---|---|
| 1 | $\overline{X}$ = **sum[X] / N**<br>= **784.8 / 39**<br>= **20.123** | Compute upgradient mean. |
| 2 | S = ( (**sum[X$^2$]** - **sum[X]**$^2$/**N**) / (**N**-1) )$^{½}$<br>= ( (**16348.16** - **615911.04/39**) / (**39**-1) )$^{½}$<br>= **3.824** | Compute upgradient sd. |
| 3 | alpha = min[ (1-.95$^{1/K}$)$^{½}$ or .01 ]<br>= min[ (1-.95$^{1/7}$)$^{½}$ or .01 ]<br>= **0.01** | Adjusted per comparison false positive rate. Pass initial or 1 resample. |
| 4 | PL = $\overline{\mathbf{X}}$ + **tS**(1+1/**N**)$^{½}$<br>= **20.123** + (**2.428*****3.824**)(1+1/**39**)$^{½}$<br>= **29.527** | One-sided normal prediction limit (t is Student's t on N-1 degrees of freedom and 1-alpha confidence level). |

## Worksheet 6

## Total dissolved solids (tds) (mg/L)

## Lognormal Prediction Limit

| Step | Equation | Description |
|---|---|---|
| 1 | $Y = \log_e(X)$ | Transform to natural logarithmic scale. |
| 2 | $\overline{Y}$ = **sum[Y] / N**<br>= **214.414 / 41**<br>= **5.23** | Compute mean on a natural log scale. |
| 3 | $S_Y = ( (\mathbf{sum[Y^2]} - \mathbf{sum[Y]}^2/\mathbf{N}) / (\mathbf{N}-1) )^{1/2}$<br>$= ( (\mathbf{1123.917} - \mathbf{45973.52}/\mathbf{41}) / (\mathbf{41}-1) )^{1/2}$<br>= **0.256** | Compute sd on a natural log scale. |
| 4 | alpha = min[ $(1-.95^{1/\mathbf{K}})^{1/2}$ or .01 ]<br>= min[ $(1-.95^{1/\mathbf{7}})^{1/2}$ or .01 ]<br>= **0.01** | Adjusted per comparison false positive rate. Pass initial or 1 resample. |
| 5 | PL = exp[$\overline{\mathbf{Y}}$ + $\mathbf{tS_Y}(1+1/\mathbf{N})^{1/2}$]<br>= exp[**5.23** + (**2.423*****0.256**)$(1+1/\mathbf{41})^{1/2}$]<br>= **349.413** | One-sided lognormal prediction limit (t is Student's t on N-1 degrees of freedom and 1-alpha confidence level). |

## Worksheet 7

## Total organic carbon (toc) (mg/L)

## Nonparametric Prediction Limit

| Step | Equation | Description |
|---|---|---|
| 1 | PL = 2nd max(X)<br>= 2**.2** | Compute nonparametric prediction limit as 2nd largest background det value |
| 2 | Confidence = **0.99** | Confidence level is based on N, K and resampling strategy (see Gibbons 1994). |

MW-16A

# Table 1

## Upgradient Data

| Constituent | Units | Well | Date | | Result | |
|---|---|---|---|---|---|---|
| Alkalinity, bicarbonate (as caco3) | mg/L | MW-16A | 04/01/1997 | | 329.0000 | |
| Alkalinity, bicarbonate (as caco3) | mg/L | MW-16A | 05/19/1997 | | 279.0000 | |
| Alkalinity, bicarbonate (as caco3) | mg/L | MW-16A | 09/12/1997 | | 362.0000 | |
| Alkalinity, bicarbonate (as caco3) | mg/L | MW-16A | 12/22/1997 | | 308.0000 | |
| Alkalinity, bicarbonate (as caco3) | mg/L | MW-16A | 03/18/1998 | | 229.0000 | |
| Alkalinity, bicarbonate (as caco3) | mg/L | MW-16A | 06/11/1998 | | 254.0000 | |
| Alkalinity, bicarbonate (as caco3) | mg/L | MW-16A | 08/21/1998 | | 342.0000 | |
| Alkalinity, bicarbonate (as caco3) | mg/L | MW-16A | 12/17/1998 | | 270.0000 | |
| Alkalinity, bicarbonate (as caco3) | mg/L | MW-16A | 03/26/1999 | | 240.0000 | |
| Alkalinity, bicarbonate (as caco3) | mg/L | MW-16A | 06/17/1999 | | 186.0000 | |
| Alkalinity, bicarbonate (as caco3) | mg/L | MW-16A | 12/13/1999 | | 174.0000 | |
| Alkalinity, bicarbonate (as caco3) | mg/L | MW-16A | 02/09/2000 | | 243.0000 | |
| Alkalinity, bicarbonate (as caco3) | mg/L | MW-16A | 05/25/2000 | | 305.0000 | |
| Alkalinity, bicarbonate (as caco3) | mg/L | MW-16A | 08/22/2000 | | 346.0000 | |
| Alkalinity, bicarbonate (as caco3) | mg/L | MW-16A | 11/08/2000 | | 298.0000 | |
| Alkalinity, bicarbonate (as caco3) | mg/L | MW-16A | 01/30/2001 | | 392.0000 | |
| Alkalinity, bicarbonate (as caco3) | mg/L | MW-16A | 04/24/2001 | | 370.0000 | |
| Alkalinity, bicarbonate (as caco3) | mg/L | MW-16A | 08/28/2001 | | 367.0000 | |
| Alkalinity, bicarbonate (as caco3) | mg/L | MW-16A | 11/06/2001 | | 355.0000 | |
| Alkalinity, bicarbonate (as caco3) | mg/L | MW-16A | 01/31/2002 | | 301.0000 | |
| Alkalinity, bicarbonate (as caco3) | mg/L | MW-16A | 04/09/2002 | | 346.0000 | |
| Alkalinity, bicarbonate (as caco3) | mg/L | MW-16A | 07/23/2002 | | 335.0000 | |
| Alkalinity, bicarbonate (as caco3) | mg/L | MW-16A | 10/09/2002 | | 420.0000 | |
| Alkalinity, bicarbonate (as caco3) | mg/L | MW-16A | 02/25/2003 | | 340.0000 | |
| Alkalinity, bicarbonate (as caco3) | mg/L | MW-16A | 05/13/2003 | | 320.0000 | |
| Alkalinity, bicarbonate (as caco3) | mg/L | MW-16A | 08/19/2003 | | 320.0000 | |
| Alkalinity, bicarbonate (as caco3) | mg/L | MW-16A | 11/19/2003 | | 360.0000 | |
| Alkalinity, bicarbonate (as caco3) | mg/L | MW-16A | 04/20/2004 | | 260.0000 | |
| Alkalinity, bicarbonate (as caco3) | mg/L | MW-16A | 11/09/2004 | | 370.0000 | |
| Alkalinity, bicarbonate (as caco3) | mg/L | MW-16A | 05/24/2005 | | 160.0000 | |
| Alkalinity, bicarbonate (as caco3) | mg/L | MW-16A | 10/26/2005 | | 240.0000 | |
| Alkalinity, bicarbonate (as caco3) | mg/L | MW-16A | 05/09/2006 | | 160.0000 | |
| Alkalinity, bicarbonate (as caco3) | mg/L | MW-16A | 10/18/2006 | | 220.0000 | |
| Alkalinity, bicarbonate (as caco3) | mg/L | MW-16A | 05/08/2007 | | 190.0000 | |
| Alkalinity, bicarbonate (as caco3) | mg/L | MW-16A | 11/07/2007 | | 320.0000 | |
| Alkalinity, bicarbonate (as caco3) | mg/L | MW-16A | 05/20/2008 | | 220.0000 | |
| Alkalinity, bicarbonate (as caco3) | mg/L | MW-16A | 11/11/2008 | | 310.0000 | |
| Alkalinity, bicarbonate (as caco3) | mg/L | MW-16A | 05/05/2009 | | 140.0000 | |
| Alkalinity, bicarbonate (as caco3) | mg/L | MW-16A | 11/18/2009 | | 280.0000 | |
| Alkalinity, bicarbonate (as caco3) | mg/L | MW-16A | 04/20/2010 | | 160.0000 | |
| Alkalinity, bicarbonate (as caco3) | mg/L | MW-16A | 10/06/2010 | | 200.0000 | |
| Alkalinity, bicarbonate (as caco3) | mg/L | MW-16A | 04/14/2011 | | 200.0000 | |
| Alkalinity, bicarbonate (as caco3) | mg/L | MW-16A | 11/03/2011 | | 230.0000 | |
| Alkalinity, bicarbonate (as caco3) | mg/L | MW-16A | 05/02/2012 | | 140.0000 | |

* - Outlier for that well and constituent.
ND = Not detected, result = detection limit.

# Table 1

## Upgradient Data

| Constituent | Units | Well | Date | | Result | |
|---|---|---|---|---|---|---|
| Alkalinity, bicarbonate (as caco3) | mg/L | MW-16A | 11/13/2012 | | 190.0000 | |
| Chloride | mg/L | MW-16A | 04/01/1997 | | 8.3000 | |
| Chloride | mg/L | MW-16A | 05/19/1997 | | 9.1000 | |
| Chloride | mg/L | MW-16A | 09/12/1997 | | 11.8000 | |
| Chloride | mg/L | MW-16A | 12/22/1997 | | 11.4000 | |
| Chloride | mg/L | MW-16A | 03/18/1998 | | 13.0000 | |
| Chloride | mg/L | MW-16A | 06/11/1998 | | 12.3000 | |
| Chloride | mg/L | MW-16A | 08/21/1998 | | 10.1000 | |
| Chloride | mg/L | MW-16A | 12/17/1998 | | 12.0000 | |
| Chloride | mg/L | MW-16A | 03/26/1999 | | 10.4000 | |
| Chloride | mg/L | MW-16A | 06/17/1999 | | 13.2000 | |
| Chloride | mg/L | MW-16A | 12/13/1999 | | 9.2000 | |
| Chloride | mg/L | MW-16A | 02/09/2000 | | 9.7000 | |
| Chloride | mg/L | MW-16A | 05/25/2000 | | 10.9000 | |
| Chloride | mg/L | MW-16A | 08/22/2000 | | 12.2000 | |
| Chloride | mg/L | MW-16A | 11/08/2000 | | 12.8000 | |
| Chloride | mg/L | MW-16A | 01/30/2001 | | 13.2000 | |
| Chloride | mg/L | MW-16A | 04/24/2001 | | 12.8000 | |
| Chloride | mg/L | MW-16A | 08/28/2001 | | 13.8000 | |
| Chloride | mg/L | MW-16A | 11/06/2001 | | 13.7000 | |
| Chloride | mg/L | MW-16A | 01/31/2002 | | 13.2000 | |
| Chloride | mg/L | MW-16A | 04/09/2002 | | 12.7000 | |
| Chloride | mg/L | MW-16A | 07/23/2002 | | 13.0000 | |
| Chloride | mg/L | MW-16A | 10/09/2002 | | 11.0000 | |
| Chloride | mg/L | MW-16A | 02/25/2003 | | 10.0000 | |
| Chloride | mg/L | MW-16A | 05/13/2003 | | 10.0000 | |
| Chloride | mg/L | MW-16A | 08/19/2003 | | 11.0000 | |
| Chloride | mg/L | MW-16A | 11/19/2003 | | 12.0000 | |
| Chloride | mg/L | MW-16A | 04/20/2004 | | 13.0000 | |
| Chloride | mg/L | MW-16A | 11/09/2004 | | 12.0000 | |
| Chloride | mg/L | MW-16A | 05/24/2005 | | 11.0000 | |
| Chloride | mg/L | MW-16A | 10/26/2005 | | 11.0000 | |
| Chloride | mg/L | MW-16A | 05/09/2006 | | 11.0000 | |
| Chloride | mg/L | MW-16A | 10/18/2006 | | 13.0000 | |
| Chloride | mg/L | MW-16A | 05/08/2007 | | 12.0000 | |
| Chloride | mg/L | MW-16A | 11/07/2007 | | 12.0000 | |
| Chloride | mg/L | MW-16A | 05/20/2008 | | 11.0000 | |
| Chloride | mg/L | MW-16A | 11/11/2008 | | 11.0000 | |
| Chloride | mg/L | MW-16A | 05/05/2009 | | 9.8000 | |
| Chloride | mg/L | MW-16A | 11/18/2009 | | 11.0000 | |
| Chloride | mg/L | MW-16A | 04/20/2010 | | 9.9000 | |
| Chloride | mg/L | MW-16A | 10/06/2010 | | 11.0000 | |
| Chloride | mg/L | MW-16A | 04/14/2011 | | 10.0000 | |
| Chloride | mg/L | MW-16A | 11/03/2011 | | 10.0000 | |

* - Outlier for that well and constituent.
ND = Not detected, result = detection limit.

# Table 1

## Upgradient Data

| Constituent | Units | Well | Date | | Result | |
|---|---|---|---|---|---|---|
| Chloride | mg/L | MW-16A | 05/02/2012 | | 9.1000 | |
| Chloride | mg/L | MW-16A | 11/13/2012 | | 9.6000 | |
| Magnesium, dissolved | mg/L | MW-16A | 04/01/1997 | | 20.5000 | |
| Magnesium, dissolved | mg/L | MW-16A | 05/19/1997 | | 19.4000 | |
| Magnesium, dissolved | mg/L | MW-16A | 09/12/1997 | | 28.5000 | |
| Magnesium, dissolved | mg/L | MW-16A | 12/22/1997 | | 26.6000 | |
| Magnesium, dissolved | mg/L | MW-16A | 03/18/1998 | | 17.7000 | |
| Magnesium, dissolved | mg/L | MW-16A | 06/11/1998 | | 16.9000 | |
| Magnesium, dissolved | mg/L | MW-16A | 08/21/1998 | | 24.4000 | |
| Magnesium, dissolved | mg/L | MW-16A | 12/17/1998 | | 22.4000 | |
| Magnesium, dissolved | mg/L | MW-16A | 03/26/1999 | | 19.1000 | |
| Magnesium, dissolved | mg/L | MW-16A | 06/17/1999 | | 15.4000 | |
| Magnesium, dissolved | mg/L | MW-16A | 09/15/1999 | | 16.5000 | |
| Magnesium, dissolved | mg/L | MW-16A | 12/13/1999 | | 14.1000 | |
| Magnesium, dissolved | mg/L | MW-16A | 02/09/2000 | | 17.2000 | |
| Magnesium, dissolved | mg/L | MW-16A | 05/25/2000 | | 27.8000 | |
| Magnesium, dissolved | mg/L | MW-16A | 08/22/2000 | | 26.2000 | |
| Magnesium, dissolved | mg/L | MW-16A | 11/08/2000 | | 22.0000 | |
| Magnesium, dissolved | mg/L | MW-16A | 01/30/2001 | | 27.0000 | |
| Magnesium, dissolved | mg/L | MW-16A | 04/24/2001 | | 28.3000 | |
| Magnesium, dissolved | mg/L | MW-16A | 08/28/2001 | | 27.4000 | |
| Magnesium, dissolved | mg/L | MW-16A | 11/06/2001 | | 28.2000 | |
| Magnesium, dissolved | mg/L | MW-16A | 01/31/2002 | | 26.0000 | |
| Magnesium, dissolved | mg/L | MW-16A | 04/09/2002 | | 27.9000 | |
| Magnesium, dissolved | mg/L | MW-16A | 07/23/2002 | | 28.7000 | |
| Magnesium, dissolved | mg/L | MW-16A | 10/09/2002 | | 32.0000 | |
| Magnesium, dissolved | mg/L | MW-16A | 02/25/2003 | | 28.0000 | |
| Magnesium, dissolved | mg/L | MW-16A | 05/13/2003 | | 27.0000 | |
| Magnesium, dissolved | mg/L | MW-16A | 08/19/2003 | | 29.0000 | |
| Magnesium, dissolved | mg/L | MW-16A | 11/19/2003 | | 29.0000 | |
| Magnesium, dissolved | mg/L | MW-16A | 04/20/2004 | | 27.0000 | |
| Magnesium, dissolved | mg/L | MW-16A | 11/09/2004 | | 32.0000 | |
| Magnesium, dissolved | mg/L | MW-16A | 05/24/2005 | | 15.0000 | |
| Magnesium, dissolved | mg/L | MW-16A | 10/26/2005 | | 19.0000 | |
| Magnesium, dissolved | mg/L | MW-16A | 05/09/2006 | | 15.0000 | |
| Magnesium, dissolved | mg/L | MW-16A | 10/18/2006 | | 19.0000 | |
| Magnesium, dissolved | mg/L | MW-16A | 05/08/2007 | | 17.0000 | |
| Magnesium, dissolved | mg/L | MW-16A | 11/07/2007 | | 28.0000 | |
| Magnesium, dissolved | mg/L | MW-16A | 05/20/2008 | | 25.0000 | |
| Magnesium, dissolved | mg/L | MW-16A | 11/11/2008 | | 26.0000 | |
| Magnesium, dissolved | mg/L | MW-16A | 05/05/2009 | | 11.0000 | |
| Magnesium, dissolved | mg/L | MW-16A | 11/18/2009 | | 19.0000 | |
| Magnesium, dissolved | mg/L | MW-16A | 04/20/2010 | | 15.0000 | |
| Magnesium, dissolved | mg/L | MW-16A | 10/06/2010 | | 14.0000 | |

* - Outlier for that well and constituent.
ND = Not detected, result = detection limit.

# Table 1

## Upgradient Data

| Constituent | Units | Well | Date | | Result | |
|---|---|---|---|---|---|---|
| Magnesium, dissolved | mg/L | MW-16A | 04/14/2011 | | 15.0000 | |
| Magnesium, dissolved | mg/L | MW-16A | 11/03/2011 | | 15.0000 | |
| Magnesium, dissolved | mg/L | MW-16A | 05/02/2012 | | 14.0000 | |
| Magnesium, dissolved | mg/L | MW-16A | 11/13/2012 | | 17.0000 | |
| Potassium, dissolved | mg/L | MW-16A | 04/01/1997 | | 1.2000 | |
| Potassium, dissolved | mg/L | MW-16A | 05/19/1997 | | 0.8800 | |
| Potassium, dissolved | mg/L | MW-16A | 09/12/1997 | | 0.7900 | |
| Potassium, dissolved | mg/L | MW-16A | 12/22/1997 | | 0.7400 | |
| Potassium, dissolved | mg/L | MW-16A | 03/18/1998 | | 0.5100 | |
| Potassium, dissolved | mg/L | MW-16A | 06/11/1998 | | 0.5000 | |
| Potassium, dissolved | mg/L | MW-16A | 08/21/1998 | | 0.5700 | |
| Potassium, dissolved | mg/L | MW-16A | 12/17/1998 | ND | 2.0000 | * |
| Potassium, dissolved | mg/L | MW-16A | 03/26/1999 | | 0.6400 | |
| Potassium, dissolved | mg/L | MW-16A | 06/17/1999 | | 0.7400 | |
| Potassium, dissolved | mg/L | MW-16A | 09/15/1999 | | 0.3200 | |
| Potassium, dissolved | mg/L | MW-16A | 12/13/1999 | | 0.7100 | |
| Potassium, dissolved | mg/L | MW-16A | 02/09/2000 | | 0.6600 | |
| Potassium, dissolved | mg/L | MW-16A | 05/25/2000 | | 0.5600 | |
| Potassium, dissolved | mg/L | MW-16A | 08/22/2000 | | 0.4600 | |
| Potassium, dissolved | mg/L | MW-16A | 11/08/2000 | ND | 0.5000 | |
| Potassium, dissolved | mg/L | MW-16A | 01/30/2001 | ND | 0.5000 | |
| Potassium, dissolved | mg/L | MW-16A | 04/24/2001 | ND | 0.5000 | |
| Potassium, dissolved | mg/L | MW-16A | 08/28/2001 | ND | 0.5000 | |
| Potassium, dissolved | mg/L | MW-16A | 11/06/2001 | ND | 0.5000 | |
| Potassium, dissolved | mg/L | MW-16A | 01/31/2002 | ND | 0.5000 | |
| Potassium, dissolved | mg/L | MW-16A | 04/09/2002 | ND | 0.5000 | |
| Potassium, dissolved | mg/L | MW-16A | 07/23/2002 | ND | 0.5000 | |
| Potassium, dissolved | mg/L | MW-16A | 10/09/2002 | ND | 0.5000 | |
| Potassium, dissolved | mg/L | MW-16A | 02/25/2003 | | 0.7900 | |
| Potassium, dissolved | mg/L | MW-16A | 05/13/2003 | ND | 0.5000 | |
| Potassium, dissolved | mg/L | MW-16A | 08/19/2003 | ND | 0.5000 | |
| Potassium, dissolved | mg/L | MW-16A | 11/19/2003 | ND | 0.5000 | |
| Potassium, dissolved | mg/L | MW-16A | 04/20/2004 | ND | 0.5000 | |
| Potassium, dissolved | mg/L | MW-16A | 11/09/2004 | ND | 0.5000 | |
| Potassium, dissolved | mg/L | MW-16A | 05/24/2005 | ND | 0.5000 | |
| Potassium, dissolved | mg/L | MW-16A | 10/26/2005 | ND | 0.5000 | |
| Potassium, dissolved | mg/L | MW-16A | 05/09/2006 | ND | 0.5000 | |
| Potassium, dissolved | mg/L | MW-16A | 10/18/2006 | | 0.7900 | |
| Potassium, dissolved | mg/L | MW-16A | 05/08/2007 | ND | 0.5000 | |
| Potassium, dissolved | mg/L | MW-16A | 11/07/2007 | ND | 0.5000 | |
| Potassium, dissolved | mg/L | MW-16A | 05/20/2008 | ND | 0.5000 | |
| Potassium, dissolved | mg/L | MW-16A | 11/11/2008 | | 0.5100 | |
| Potassium, dissolved | mg/L | MW-16A | 05/05/2009 | ND | 0.5000 | |
| Potassium, dissolved | mg/L | MW-16A | 11/18/2009 | ND | 0.5000 | |

* - Outlier for that well and constituent.
ND = Not detected, result = detection limit.

# Table 1

## Upgradient Data

| Constituent | Units | Well | Date | | Result | |
|---|---|---|---|---|---|---|
| Potassium, dissolved | mg/L | MW-16A | 04/20/2010 | ND | 0.5000 | |
| Potassium, dissolved | mg/L | MW-16A | 10/06/2010 | ND | 0.5000 | |
| Potassium, dissolved | mg/L | MW-16A | 04/14/2011 | ND | 0.5000 | |
| Potassium, dissolved | mg/L | MW-16A | 11/03/2011 | ND | 0.5000 | |
| Potassium, dissolved | mg/L | MW-16A | 05/02/2012 | ND | 0.5000 | |
| Potassium, dissolved | mg/L | MW-16A | 11/13/2012 | ND | 0.5000 | |
| Sodium, dissolved | mg/L | MW-16A | 04/01/1997 | | 57.1000 | |
| Sodium, dissolved | mg/L | MW-16A | 05/19/1997 | | 53.8000 | |
| Sodium, dissolved | mg/L | MW-16A | 09/12/1997 | | 56.9000 | |
| Sodium, dissolved | mg/L | MW-16A | 12/22/1997 | | 51.6000 | |
| Sodium, dissolved | mg/L | MW-16A | 03/18/1998 | | 45.9000 | |
| Sodium, dissolved | mg/L | MW-16A | 06/11/1998 | | 45.7000 | |
| Sodium, dissolved | mg/L | MW-16A | 08/21/1998 | | 48.8000 | |
| Sodium, dissolved | mg/L | MW-16A | 12/17/1998 | | 49.6000 | |
| Sodium, dissolved | mg/L | MW-16A | 03/26/1999 | | 37.9000 | |
| Sodium, dissolved | mg/L | MW-16A | 06/17/1999 | | 39.9000 | |
| Sodium, dissolved | mg/L | MW-16A | 09/15/1999 | | 41.6000 | |
| Sodium, dissolved | mg/L | MW-16A | 12/13/1999 | | 35.8000 | |
| Sodium, dissolved | mg/L | MW-16A | 02/09/2000 | | 40.1000 | |
| Sodium, dissolved | mg/L | MW-16A | 05/25/2000 | | 52.6000 | |
| Sodium, dissolved | mg/L | MW-16A | 08/22/2000 | | 48.5000 | |
| Sodium, dissolved | mg/L | MW-16A | 11/08/2000 | | 42.9000 | |
| Sodium, dissolved | mg/L | MW-16A | 01/30/2001 | | 47.6000 | |
| Sodium, dissolved | mg/L | MW-16A | 04/24/2001 | | 48.6000 | |
| Sodium, dissolved | mg/L | MW-16A | 08/28/2001 | | 46.9000 | |
| Sodium, dissolved | mg/L | MW-16A | 11/06/2001 | | 48.4000 | |
| Sodium, dissolved | mg/L | MW-16A | 01/31/2002 | | 42.6000 | |
| Sodium, dissolved | mg/L | MW-16A | 04/09/2002 | | 44.7000 | |
| Sodium, dissolved | mg/L | MW-16A | 07/23/2002 | | 48.3000 | |
| Sodium, dissolved | mg/L | MW-16A | 10/09/2002 | | 50.0000 | |
| Sodium, dissolved | mg/L | MW-16A | 02/25/2003 | | 48.0000 | |
| Sodium, dissolved | mg/L | MW-16A | 05/13/2003 | | 44.0000 | |
| Sodium, dissolved | mg/L | MW-16A | 08/19/2003 | | 45.0000 | |
| Sodium, dissolved | mg/L | MW-16A | 11/19/2003 | | 47.0000 | |
| Sodium, dissolved | mg/L | MW-16A | 04/20/2004 | | 44.0000 | |
| Sodium, dissolved | mg/L | MW-16A | 11/09/2004 | | 55.0000 | |
| Sodium, dissolved | mg/L | MW-16A | 05/24/2005 | | 38.0000 | |
| Sodium, dissolved | mg/L | MW-16A | 10/26/2005 | | 38.0000 | |
| Sodium, dissolved | mg/L | MW-16A | 05/09/2006 | | 34.0000 | |
| Sodium, dissolved | mg/L | MW-16A | 10/18/2006 | | 36.0000 | |
| Sodium, dissolved | mg/L | MW-16A | 05/08/2007 | | 35.0000 | |
| Sodium, dissolved | mg/L | MW-16A | 11/07/2007 | | 43.0000 | |
| Sodium, dissolved | mg/L | MW-16A | 05/20/2008 | | 45.0000 | |
| Sodium, dissolved | mg/L | MW-16A | 11/11/2008 | | 43.0000 | |

* - Outlier for that well and constituent.
ND = Not detected, result = detection limit.

# Table 1

## Upgradient Data

| Constituent | Units | Well | Date | | Result | |
|---|---|---|---|---|---|---|
| Sodium, dissolved | mg/L | MW-16A | 05/05/2009 | | 32.0000 | |
| Sodium, dissolved | mg/L | MW-16A | 11/18/2009 | | 42.0000 | |
| Sodium, dissolved | mg/L | MW-16A | 04/20/2010 | | 38.0000 | |
| Sodium, dissolved | mg/L | MW-16A | 10/06/2010 | | 35.0000 | |
| Sodium, dissolved | mg/L | MW-16A | 04/14/2011 | | 42.0000 | |
| Sodium, dissolved | mg/L | MW-16A | 11/03/2011 | | 37.0000 | |
| Sodium, dissolved | mg/L | MW-16A | 05/02/2012 | | 35.0000 | |
| Sodium, dissolved | mg/L | MW-16A | 11/13/2012 | | 34.0000 | |
| Total dissolved solids (tds) | mg/L | MW-16A | 04/01/1997 | | 338.0000 | |
| Total dissolved solids (tds) | mg/L | MW-16A | 05/19/1997 | | 394.0000 | |
| Total dissolved solids (tds) | mg/L | MW-16A | 09/12/1997 | | 421.0000 | |
| Total dissolved solids (tds) | mg/L | MW-16A | 12/22/1997 | | 394.0000 | |
| Total dissolved solids (tds) | mg/L | MW-16A | 03/18/1998 | | 296.0000 | |
| Total dissolved solids (tds) | mg/L | MW-16A | 06/11/1998 | | 339.0000 | |
| Total dissolved solids (tds) | mg/L | MW-16A | 08/21/1998 | | 350.0000 | |
| Total dissolved solids (tds) | mg/L | MW-16A | 12/17/1998 | | 325.0000 | |
| Total dissolved solids (tds) | mg/L | MW-16A | 03/26/1999 | | 306.0000 | |
| Total dissolved solids (tds) | mg/L | MW-16A | 06/17/1999 | | 264.0000 | |
| Total dissolved solids (tds) | mg/L | MW-16A | 12/13/1999 | | 205.0000 | |
| Total dissolved solids (tds) | mg/L | MW-16A | 02/09/2000 | | 314.0000 | |
| Total dissolved solids (tds) | mg/L | MW-16A | 05/25/2000 | | 343.0000 | |
| Total dissolved solids (tds) | mg/L | MW-16A | 08/22/2000 | | 384.0000 | |
| Total dissolved solids (tds) | mg/L | MW-16A | 11/08/2000 | | 351.0000 | |
| Total dissolved solids (tds) | mg/L | MW-16A | 01/30/2001 | | 359.0000 | |
| Total dissolved solids (tds) | mg/L | MW-16A | 04/24/2001 | | 460.0000 | |
| Total dissolved solids (tds) | mg/L | MW-16A | 08/28/2001 | | 456.0000 | |
| Total dissolved solids (tds) | mg/L | MW-16A | 11/06/2001 | | 345.0000 | |
| Total dissolved solids (tds) | mg/L | MW-16A | 01/31/2002 | | 318.0000 | |
| Total dissolved solids (tds) | mg/L | MW-16A | 04/09/2002 | | 427.0000 | |
| Total dissolved solids (tds) | mg/L | MW-16A | 07/23/2002 | | 482.0000 | |
| Total dissolved solids (tds) | mg/L | MW-16A | 10/09/2002 | | 420.0000 | |
| Total dissolved solids (tds) | mg/L | MW-16A | 02/25/2003 | | 380.0000 | |
| Total dissolved solids (tds) | mg/L | MW-16A | 05/13/2003 | | 390.0000 | |
| Total dissolved solids (tds) | mg/L | MW-16A | 08/19/2003 | | 420.0000 | |
| Total dissolved solids (tds) | mg/L | MW-16A | 11/19/2003 | | 400.0000 | |
| Total dissolved solids (tds) | mg/L | MW-16A | 04/20/2004 | | 300.0000 | |
| Total dissolved solids (tds) | mg/L | MW-16A | 11/09/2004 | | 410.0000 | |
| Total dissolved solids (tds) | mg/L | MW-16A | 05/24/2005 | | 240.0000 | |
| Total dissolved solids (tds) | mg/L | MW-16A | 10/26/2005 | | 290.0000 | |
| Total dissolved solids (tds) | mg/L | MW-16A | 05/09/2006 | | 270.0000 | |
| Total dissolved solids (tds) | mg/L | MW-16A | 10/18/2006 | | 300.0000 | |
| Total dissolved solids (tds) | mg/L | MW-16A | 05/08/2007 | | 260.0000 | |
| Total dissolved solids (tds) | mg/L | MW-16A | 11/07/2007 | | 350.0000 | |
| Total dissolved solids (tds) | mg/L | MW-16A | 05/20/2008 | | 280.0000 | |

* - Outlier for that well and constituent.
ND = Not detected, result = detection limit.

# Table 1

## Upgradient Data

| Constituent | Units | Well | Date | | Result | |
|---|---|---|---|---|---|---|
| Total dissolved solids (tds) | mg/L | MW-16A | 11/11/2008 | | 360.0000 | |
| Total dissolved solids (tds) | mg/L | MW-16A | 05/05/2009 | | 220.0000 | |
| Total dissolved solids (tds) | mg/L | MW-16A | 11/18/2009 | | 320.0000 | |
| Total dissolved solids (tds) | mg/L | MW-16A | 04/20/2010 | | 260.0000 | |
| Total dissolved solids (tds) | mg/L | MW-16A | 10/06/2010 | | 260.0000 | |
| Total dissolved solids (tds) | mg/L | MW-16A | 04/14/2011 | | 250.0000 | |
| Total dissolved solids (tds) | mg/L | MW-16A | 11/03/2011 | | 310.0000 | |
| Total dissolved solids (tds) | mg/L | MW-16A | 05/02/2012 | | 210.0000 | |
| Total dissolved solids (tds) | mg/L | MW-16A | 11/13/2012 | | 250.0000 | |
| Total organic carbon (toc) | mg/L | MW-16A | 04/01/1997 | | 4.4000 | |
| Total organic carbon (toc) | mg/L | MW-16A | 05/19/1997 | | 2.3000 | |
| Total organic carbon (toc) | mg/L | MW-16A | 09/12/1997 | | 2.3000 | |
| Total organic carbon (toc) | mg/L | MW-16A | 12/22/1997 | | 2.1000 | |
| Total organic carbon (toc) | mg/L | MW-16A | 03/18/1998 | | 1.6000 | |
| Total organic carbon (toc) | mg/L | MW-16A | 06/11/1998 | | 2.2000 | |
| Total organic carbon (toc) | mg/L | MW-16A | 08/21/1998 | | 2.1000 | |
| Total organic carbon (toc) | mg/L | MW-16A | 12/17/1998 | | 1.6000 | |
| Total organic carbon (toc) | mg/L | MW-16A | 03/26/1999 | | 1.3000 | |
| Total organic carbon (toc) | mg/L | MW-16A | 06/17/1999 | | 1.3000 | |
| Total organic carbon (toc) | mg/L | MW-16A | 12/13/1999 | | 1.8000 | |
| Total organic carbon (toc) | mg/L | MW-16A | 02/09/2000 | | 1.8000 | |
| Total organic carbon (toc) | mg/L | MW-16A | 05/25/2000 | | 2.5000 | |
| Total organic carbon (toc) | mg/L | MW-16A | 08/22/2000 | | 2.0000 | |
| Total organic carbon (toc) | mg/L | MW-16A | 11/08/2000 | | 2.8000 | |
| Total organic carbon (toc) | mg/L | MW-16A | 01/30/2001 | | 3.8000 | |
| Total organic carbon (toc) | mg/L | MW-16A | 04/24/2001 | | 3.3000 | |
| Total organic carbon (toc) | mg/L | MW-16A | 08/28/2001 | | 2.8000 | |
| Total organic carbon (toc) | mg/L | MW-16A | 11/06/2001 | | 3.2000 | |
| Total organic carbon (toc) | mg/L | MW-16A | 01/31/2002 | | 3.4000 | |
| Total organic carbon (toc) | mg/L | MW-16A | 04/09/2002 | | 3.1000 | |
| Total organic carbon (toc) | mg/L | MW-16A | 07/23/2002 | | 3.1000 | |
| Total organic carbon (toc) | mg/L | MW-16A | 10/09/2002 | | 2.7000 | |
| Total organic carbon (toc) | mg/L | MW-16A | 02/25/2003 | | 2.0000 | |
| Total organic carbon (toc) | mg/L | MW-16A | 05/13/2003 | | 2.0000 | |
| Total organic carbon (toc) | mg/L | MW-16A | 08/19/2003 | | 2.3000 | |
| Total organic carbon (toc) | mg/L | MW-16A | 11/19/2003 | | 1.6000 | |
| Total organic carbon (toc) | mg/L | MW-16A | 04/20/2004 | | 4.5000 | |
| Total organic carbon (toc) | mg/L | MW-16A | 11/09/2004 | | 5.2000 | |
| Total organic carbon (toc) | mg/L | MW-16A | 05/24/2005 | | 1.5000 | |
| Total organic carbon (toc) | mg/L | MW-16A | 10/26/2005 | | 2.7000 | |
| Total organic carbon (toc) | mg/L | MW-16A | 05/09/2006 | | 2.1000 | |
| Total organic carbon (toc) | mg/L | MW-16A | 10/18/2006 | | 2.4000 | |
| Total organic carbon (toc) | mg/L | MW-16A | 05/08/2007 | | 1.4000 | |
| Total organic carbon (toc) | mg/L | MW-16A | 11/07/2007 | | 1.5000 | |

* - Outlier for that well and constituent.
ND = Not detected, result = detection limit.

# Table 1

## Upgradient Data

| Constituent | Units | Well | Date | | Result | |
|---|---|---|---|---|---|---|
| Total organic carbon (toc) | mg/L | MW-16A | 05/20/2008 | | 1.8000 | |
| Total organic carbon (toc) | mg/L | MW-16A | 11/11/2008 | | 2.6000 | |
| Total organic carbon (toc) | mg/L | MW-16A | 05/05/2009 | | 1.9000 | |
| Total organic carbon (toc) | mg/L | MW-16A | 11/18/2009 | | 3.9000 | |
| Total organic carbon (toc) | mg/L | MW-16A | 04/20/2010 | | 1.7000 | |
| Total organic carbon (toc) | mg/L | MW-16A | 10/06/2010 | | 1.8000 | |
| Total organic carbon (toc) | mg/L | MW-16A | 04/14/2011 | | 1.7000 | |
| Total organic carbon (toc) | mg/L | MW-16A | 11/03/2011 | | 1.5000 | |
| Total organic carbon (toc) | mg/L | MW-16A | 05/02/2012 | | 1.8000 | |
| Total organic carbon (toc) | mg/L | MW-16A | 11/13/2012 | | 1.6000 | |

* - Outlier for that well and constituent.
ND = Not detected, result = detection limit.

# Table 2

## Shapiro Wilk Test of Normality for Multiple Groups

| Constituent | N (Detects) | Detect Freq | G raw | G log | Critical Value | Limit Type |
|---|---|---|---|---|---|---|
| Alkalinity, bicarbonate (as caco3) | 45 | 1.000 | 1.484 | 2.343 | 2.326 | normal |
| Chloride | 45 | 1.000 | 1.349 | 1.439 | 2.326 | normal |
| Magnesium, dissolved | 46 | 1.000 | 3.074 | 3.084 | 2.326 | nonpar |
| Potassium, dissolved | 17 | 0.378 | 0.485 | 0.487 | 2.326 | nonpar |
| Sodium, dissolved | 46 | 1.000 | 0.608 | 0.697 | 2.326 | normal |
| Total dissolved solids (tds) | 45 | 1.000 | 0.016 | 0.331 | 2.326 | normal |
| Total organic carbon (toc) | 45 | 1.000 | 3.511 | 2.030 | 2.326 | lognor |

Fit to distribution is confirmed if G < critical value.
If detection frequency is < 50% nonparametric or Poisson limit is used

# Table 3

## Summary Statistics and Prediction Limits

| Constituent | Units | Model Type | N | Detect | Mean | SD | Pred Limit | Conf* |
|---|---|---|---|---|---|---|---|---|
| Alkalinity, bicarbonate (as caco3) | mg/L | normal | 45 | 45 | 275.1333 | 75.7645 | 460.0539 | |
| Chloride | mg/L | normal | 45 | 45 | 11.3378 | 1.4146 | 14.7904 | |
| Magnesium, dissolved | mg/L | nonpar | 46 | 46 | | | 32.0000 | 0.99 |
| Potassium, dissolved | mg/L | nonpar | 45 | 17 | | | 0.8800 | 0.99 |
| Sodium, dissolved | mg/L | normal | 46 | 46 | 43.8217 | 6.4528 | 59.5544 | |
| Total dissolved solids (tds) | mg/L | normal | 45 | 45 | 333.8000 | 69.9654 | 504.5667 | |
| Total organic carbon (toc) | mg/L | lognor | 45 | 45 | 0.8035 | 0.3480 | 5.2225 | |

* - Confidence level for passing initial test or one verification resample at all downgradient wells for a single constituent (nonparametric test only).
Model Type refers to type of prediction limit.
For lognormal limit, mean and sd in natural log units and prediction limit in original units.
All sample sizes and statistics are based on outlier free data.
For nonparametric limits, median reporting limits are substituted for extreme reporting limit values.

## Worksheet 1

## Alkalinity, bicarbonate (as caco3) (mg/L)

## Normal Prediction Limit

| Step | Equation | Description |
|---|---|---|
| 1 | $\overline{X}$ = **sum[X]** / **N**<br>= **12381.0** / **45**<br>= **275.133** | Compute upgradient mean. |
| 2 | S = ( (**sum[X$^2$]** - **sum[X]**$^2$/**N**) / (**N**-1) )$^{½}$<br>= ( (**3.66**x**10$^6$** - **1.53**x**10$^8$**/**45**) / (**45**-1) )$^{½}$<br>= **75.764** | Compute upgradient sd. |
| 3 | alpha = min[ (1-.95$^{1/K}$)$^{½}$ or .01 ]<br>= min[ (1-.95$^{1/7}$)$^{½}$ or .01 ]<br>= **0.01** | Adjusted per comparison false positive rate. Pass initial or 1 resample. |
| 4 | PL = $\overline{\mathbf{X}}$ + **tS**(1+1/**N**)$^{½}$<br>= **275.133** + (**2.414*****75.764**)(1+1/**45**)$^{½}$<br>= **460.054** | One-sided normal prediction limit (t is Student's t on N-1 degrees of freedom and 1-alpha confidence level). |

## Worksheet 2

## Chloride (mg/L)

## Normal Prediction Limit

| Step | Equation | Description |
|---|---|---|
| 1 | $\overline{X}$ = **sum[X] / N**<br>= **510.2 / 45**<br>= **11.338** | Compute upgradient mean. |
| 2 | S = ( (**sum[X$^2$]** - **sum[X]**$^2$/**N**) / (**N**-1) )$^{½}$<br>= ( (**5872.58** - **260304.04**/**45**) / (**45**-1) )$^{½}$<br>= **1.415** | Compute upgradient sd. |
| 3 | alpha = min[ (1-.95$^{1/K}$)$^{½}$ or .01 ]<br>= min[ (1-.95$^{1/7}$)$^{½}$ or .01 ]<br>= **0.01** | Adjusted per comparison false positive rate. Pass initial or 1 resample. |
| 4 | PL = $\overline{X}$ + **tS**(1+1/**N**)$^{½}$<br>= **11.338** + (**2.414*****1.415**)(1+1/**45**)$^{½}$<br>= **14.79** | One-sided normal prediction limit (t is Student's t on N-1 degrees of freedom and 1-alpha confidence level). |

## Worksheet 3

## Magnesium, dissolved (mg/L)

## Nonparametric Prediction Limit

| Step | Equation | Description |
|---|---|---|
| 1 | PL = 2nd max(X)<br>= **32.0** | Compute nonparametric prediction limit as 2nd largest background det value. |
| 2 | Confidence = **0.99** | Confidence level is based on N, K and resampling strategy (see Gibbons 1994). |

## Worksheet 4

## Potassium, dissolved (mg/L)

## Nonparametric Prediction Limit

| Step | Equation | Description |
|---|---|---|
| 1 | PL = 2nd max(X)<br>= 0**.88** | Compute nonparametric prediction limit as 2nd largest background det value. |
| 2 | Confidence = **0.99** | Confidence level is based on N, K and resampling strategy (see Gibbons 1994). |

## Worksheet 5

## Sodium, dissolved (mg/L)

## Normal Prediction Limit

| Step | Equation | Description |
|---|---|---|
| 1 | $\overline{X}$ = **sum[X] / N**<br>= **2015.8 / 46**<br>= **43.822** | Compute upgradient mean. |
| 2 | S = ( (**sum[X$^2$] - sum[X]$^2$/N**) / (**N**-1) )$^{½}$<br>= ( (**90209.6 - 4.06**x**10$^6$/46**) / (**46**-1) )$^{½}$<br>= **6.453** | Compute upgradient sd. |
| 3 | alpha = min[ (1-.95$^{1/K}$)$^{½}$ or .01 ]<br>= min[ (1-.95$^{1/7}$)$^{½}$ or .01 ]<br>= **0.01** | Adjusted per comparison false positive rate. Pass initial or 1 resample. |
| 4 | PL = $\overline{X}$ + **tS**(1+1/**N**)$^{½}$<br>= **43.822** + (**2.412***6.453)(1+1/**46**)$^{½}$<br>= **59.554** | One-sided normal prediction limit (t is Student's t on N-1 degrees of freedom and 1-alpha confidence level). |

## Worksheet 6

## Total dissolved solids (tds) (mg/L)

## Normal Prediction Limit

| Step | Equation | Description |
|---|---|---|
| 1 | $\overline{X}$ = **sum[X] / N**<br>= **15021.0 / 45**<br>= **333.8** | Compute upgradient mean. |
| 2 | S = ( (**sum[X$^2$]** - **sum[X]**$^2$/**N**) / (**N**-1) )$^{½}$<br>= ( (**5.23**x**10$^6$** - **2.26**x**10$^8$**/**45**) / (**45**-1) )$^{½}$<br>= **69.965** | Compute upgradient sd. |
| 3 | alpha = min[ (1-.95$^{1/K}$)$^{½}$ or .01 ]<br>= min[ (1-.95$^{1/7}$)$^{½}$ or .01 ]<br>= **0.01** | Adjusted per comparison false positive rate. Pass initial or 1 resample. |
| 4 | PL = $\overline{X}$ + **tS**(1+1/**N**)$^{½}$<br>= **333.8** + (**2.414*****69.965**)(1+1/**45**)$^{½}$<br>= **504.567** | One-sided normal prediction limit (t is Student's t on N-1 degrees of freedom and 1-alpha confidence level). |

## Worksheet 7

## Total organic carbon (toc) (mg/L)

## Lognormal Prediction Limit

| Step | Equation | Description |
|---|---|---|
| 1 | $Y = \log_e(X)$ | Transform to natural logarithmic scale. |
| 2 | $\overline{Y}$ = **sum[Y]** / **N**<br>= **36.159** / **45**<br>= **0.804** | Compute mean on a natural log scale. |
| 3 | $S_Y = ( (\mathbf{sum[Y^2]} - \mathbf{sum[Y]}^2/\mathbf{N}) / (\mathbf{N}-1) )^{½}$<br>$= ( (\mathbf{34.384} - \mathbf{1307.479}/\mathbf{45}) / (\mathbf{45}-1) )^{½}$<br>= **0.348** | Compute sd on a natural log scale. |
| 4 | alpha = min[ $(1-.95^{1/\mathbf{K}})^{½}$ or .01 ]<br>= min[ $(1-.95^{1/\mathbf{7}})^{½}$ or .01 ]<br>= **0.01** | Adjusted per comparison false positive rate. Pass initial or 1 resample. |
| 5 | PL = $\exp[\overline{\mathbf{Y}} + \mathbf{tS_Y}(1+1/\mathbf{N})^{½}]$<br>= $\exp[\mathbf{0.804} + (\mathbf{2.414}*\mathbf{0.348})(1+1/\mathbf{45})^{½}]$<br>= **5.222** | One-sided lognormal prediction limit (t is Student's t on N-1 degrees of freedom and 1-alpha confidence level). |

**MW-21A**

# Table 1

## Upgradient Data

| Constituent | Units | Well | Date | | Result | |
|---|---|---|---|---|---|---|
| Alkalinity, bicarbonate (as caco3) | mg/L | MW-21A | 01/31/2001 | | 199.0000 | |
| Alkalinity, bicarbonate (as caco3) | mg/L | MW-21A | 04/25/2001 | | 184.0000 | |
| Alkalinity, bicarbonate (as caco3) | mg/L | MW-21A | 08/28/2001 | | 196.0000 | |
| Alkalinity, bicarbonate (as caco3) | mg/L | MW-21A | 11/06/2001 | | 177.0000 | |
| Alkalinity, bicarbonate (as caco3) | mg/L | MW-21A | 01/30/2002 | | 133.0000 | |
| Alkalinity, bicarbonate (as caco3) | mg/L | MW-21A | 04/10/2002 | | 118.0000 | |
| Alkalinity, bicarbonate (as caco3) | mg/L | MW-21A | 07/25/2002 | | 146.0000 | |
| Alkalinity, bicarbonate (as caco3) | mg/L | MW-21A | 02/26/2003 | | 120.0000 | |
| Alkalinity, bicarbonate (as caco3) | mg/L | MW-21A | 05/14/2003 | | 130.0000 | |
| Alkalinity, bicarbonate (as caco3) | mg/L | MW-21A | 08/19/2003 | | 150.0000 | |
| Alkalinity, bicarbonate (as caco3) | mg/L | MW-21A | 11/20/2003 | | 160.0000 | |
| Alkalinity, bicarbonate (as caco3) | mg/L | MW-21A | 04/21/2004 | | 100.0000 | |
| Alkalinity, bicarbonate (as caco3) | mg/L | MW-21A | 05/25/2005 | | 140.0000 | |
| Alkalinity, bicarbonate (as caco3) | mg/L | MW-21A | 10/27/2005 | | 140.0000 | |
| Alkalinity, bicarbonate (as caco3) | mg/L | MW-21A | 05/10/2006 | | 140.0000 | |
| Alkalinity, bicarbonate (as caco3) | mg/L | MW-21A | 11/22/2006 | | 82.0000 | |
| Alkalinity, bicarbonate (as caco3) | mg/L | MW-21A | 05/09/2007 | | 120.0000 | |
| Alkalinity, bicarbonate (as caco3) | mg/L | MW-21A | 11/08/2007 | | 140.0000 | |
| Alkalinity, bicarbonate (as caco3) | mg/L | MW-21A | 05/21/2008 | | 130.0000 | |
| Alkalinity, bicarbonate (as caco3) | mg/L | MW-21A | 11/12/2008 | | 130.0000 | |
| Alkalinity, bicarbonate (as caco3) | mg/L | MW-21A | 05/06/2009 | | 130.0000 | |
| Alkalinity, bicarbonate (as caco3) | mg/L | MW-21A | 11/18/2009 | | 140.0000 | |
| Alkalinity, bicarbonate (as caco3) | mg/L | MW-21A | 04/21/2010 | | 130.0000 | |
| Alkalinity, bicarbonate (as caco3) | mg/L | MW-21A | 11/24/2010 | | 190.0000 | |
| Alkalinity, bicarbonate (as caco3) | mg/L | MW-21A | 04/15/2011 | | 150.0000 | |
| Alkalinity, bicarbonate (as caco3) | mg/L | MW-21A | 01/12/2012 | | 120.0000 | |
| Alkalinity, bicarbonate (as caco3) | mg/L | MW-21A | 05/01/2012 | | 120.0000 | |
| Alkalinity, bicarbonate (as caco3) | mg/L | MW-21A | 11/14/2012 | | 150.0000 | |
| Chloride | mg/L | MW-21A | 01/31/2001 | | 16.0000 | |
| Chloride | mg/L | MW-21A | 04/25/2001 | | 14.2000 | |
| Chloride | mg/L | MW-21A | 08/28/2001 | | 16.9000 | |
| Chloride | mg/L | MW-21A | 11/06/2001 | | 15.5000 | |
| Chloride | mg/L | MW-21A | 01/30/2002 | | 11.8000 | |
| Chloride | mg/L | MW-21A | 04/10/2002 | | 7.8000 | |
| Chloride | mg/L | MW-21A | 07/25/2002 | | 10.0000 | |
| Chloride | mg/L | MW-21A | 02/26/2003 | | 7.3000 | |
| Chloride | mg/L | MW-21A | 05/14/2003 | | 6.2000 | |
| Chloride | mg/L | MW-21A | 08/19/2003 | | 7.0000 | |
| Chloride | mg/L | MW-21A | 11/20/2003 | | 8.2000 | |
| Chloride | mg/L | MW-21A | 04/21/2004 | | 6.4000 | |
| Chloride | mg/L | MW-21A | 05/25/2005 | | 6.6000 | |
| Chloride | mg/L | MW-21A | 10/27/2005 | | 6.4000 | |
| Chloride | mg/L | MW-21A | 05/10/2006 | | 6.2000 | |
| Chloride | mg/L | MW-21A | 11/22/2006 | | 7.0000 | |

* - Outlier for that well and constituent.
ND = Not detected, result = detection limit.

# Table 1

## Upgradient Data

| Constituent | Units | Well | Date | | Result | |
|---|---|---|---|---|---|---|
| Chloride | mg/L | MW-21A | 05/09/2007 | | 6.7000 | |
| Chloride | mg/L | MW-21A | 11/08/2007 | | 6.4000 | |
| Chloride | mg/L | MW-21A | 05/21/2008 | | 5.2000 | |
| Chloride | mg/L | MW-21A | 11/12/2008 | | 7.0000 | |
| Chloride | mg/L | MW-21A | 05/06/2009 | | 7.2000 | |
| Chloride | mg/L | MW-21A | 11/18/2009 | | 7.7000 | |
| Chloride | mg/L | MW-21A | 04/21/2010 | | 6.6000 | |
| Chloride | mg/L | MW-21A | 11/24/2010 | | 7.3000 | |
| Chloride | mg/L | MW-21A | 04/15/2011 | | 5.7000 | |
| Chloride | mg/L | MW-21A | 01/12/2012 | | 6.0000 | |
| Chloride | mg/L | MW-21A | 05/01/2012 | | 5.1000 | |
| Chloride | mg/L | MW-21A | 11/14/2012 | | 6.2000 | |
| Magnesium, dissolved | mg/L | MW-21A | 01/31/2001 | | 15.1000 | |
| Magnesium, dissolved | mg/L | MW-21A | 04/25/2001 | | 21.0000 | |
| Magnesium, dissolved | mg/L | MW-21A | 08/28/2001 | | 16.2000 | |
| Magnesium, dissolved | mg/L | MW-21A | 11/06/2001 | | 16.4000 | |
| Magnesium, dissolved | mg/L | MW-21A | 01/30/2002 | | 12.8000 | |
| Magnesium, dissolved | mg/L | MW-21A | 04/10/2002 | | 12.2000 | |
| Magnesium, dissolved | mg/L | MW-21A | 07/25/2002 | | 13.4000 | |
| Magnesium, dissolved | mg/L | MW-21A | 02/26/2003 | | 13.0000 | |
| Magnesium, dissolved | mg/L | MW-21A | 05/14/2003 | | 13.0000 | |
| Magnesium, dissolved | mg/L | MW-21A | 08/19/2003 | | 14.0000 | |
| Magnesium, dissolved | mg/L | MW-21A | 11/20/2003 | | 15.0000 | |
| Magnesium, dissolved | mg/L | MW-21A | 04/21/2004 | | 12.0000 | |
| Magnesium, dissolved | mg/L | MW-21A | 05/25/2005 | | 14.0000 | |
| Magnesium, dissolved | mg/L | MW-21A | 10/27/2005 | | 14.0000 | |
| Magnesium, dissolved | mg/L | MW-21A | 05/10/2006 | | 12.0000 | |
| Magnesium, dissolved | mg/L | MW-21A | 11/22/2006 | | 8.2000 | |
| Magnesium, dissolved | mg/L | MW-21A | 05/09/2007 | | 9.3000 | |
| Magnesium, dissolved | mg/L | MW-21A | 11/08/2007 | | 12.0000 | |
| Magnesium, dissolved | mg/L | MW-21A | 05/21/2008 | | 11.0000 | |
| Magnesium, dissolved | mg/L | MW-21A | 11/12/2008 | | 12.0000 | |
| Magnesium, dissolved | mg/L | MW-21A | 05/06/2009 | | 10.0000 | |
| Magnesium, dissolved | mg/L | MW-21A | 11/18/2009 | | 12.0000 | |
| Magnesium, dissolved | mg/L | MW-21A | 04/21/2010 | | 10.0000 | |
| Magnesium, dissolved | mg/L | MW-21A | 11/24/2010 | | 18.0000 | |
| Magnesium, dissolved | mg/L | MW-21A | 04/15/2011 | | 11.0000 | |
| Magnesium, dissolved | mg/L | MW-21A | 01/12/2012 | | 9.3000 | |
| Magnesium, dissolved | mg/L | MW-21A | 05/01/2012 | | 9.6000 | |
| Magnesium, dissolved | mg/L | MW-21A | 11/14/2012 | | 13.0000 | |
| Potassium, dissolved | mg/L | MW-21A | 01/31/2001 | | 3.3000 | * |
| Potassium, dissolved | mg/L | MW-21A | 04/25/2001 | | 1.7000 | * |
| Potassium, dissolved | mg/L | MW-21A | 08/28/2001 | | 0.9300 | |
| Potassium, dissolved | mg/L | MW-21A | 11/06/2001 | | 0.6800 | |

* - Outlier for that well and constituent.
ND = Not detected, result = detection limit.

# Table 1

## Upgradient Data

| Constituent | Units | Well | Date | | Result | |
|---|---|---|---|---|---|---|
| Potassium, dissolved | mg/L | MW-21A | 01/30/2002 | | 0.6800 | |
| Potassium, dissolved | mg/L | MW-21A | 04/10/2002 | ND | 0.5000 | |
| Potassium, dissolved | mg/L | MW-21A | 07/25/2002 | | 0.9100 | |
| Potassium, dissolved | mg/L | MW-21A | 02/26/2003 | ND | 0.5000 | |
| Potassium, dissolved | mg/L | MW-21A | 05/14/2003 | ND | 0.5000 | |
| Potassium, dissolved | mg/L | MW-21A | 08/19/2003 | ND | 0.5000 | |
| Potassium, dissolved | mg/L | MW-21A | 11/20/2003 | ND | 0.5000 | |
| Potassium, dissolved | mg/L | MW-21A | 04/21/2004 | ND | 0.5000 | |
| Potassium, dissolved | mg/L | MW-21A | 05/25/2005 | ND | 0.5000 | |
| Potassium, dissolved | mg/L | MW-21A | 10/27/2005 | ND | 0.5000 | |
| Potassium, dissolved | mg/L | MW-21A | 05/10/2006 | ND | 0.5000 | |
| Potassium, dissolved | mg/L | MW-21A | 11/22/2006 | ND | 0.5000 | |
| Potassium, dissolved | mg/L | MW-21A | 05/09/2007 | ND | 0.5000 | |
| Potassium, dissolved | mg/L | MW-21A | 11/08/2007 | ND | 0.5000 | |
| Potassium, dissolved | mg/L | MW-21A | 05/21/2008 | | 0.5100 | |
| Potassium, dissolved | mg/L | MW-21A | 11/12/2008 | ND | 0.5000 | |
| Potassium, dissolved | mg/L | MW-21A | 05/06/2009 | ND | 0.5000 | |
| Potassium, dissolved | mg/L | MW-21A | 11/18/2009 | ND | 0.5000 | |
| Potassium, dissolved | mg/L | MW-21A | 04/21/2010 | ND | 0.5000 | |
| Potassium, dissolved | mg/L | MW-21A | 11/24/2010 | ND | 0.5000 | |
| Potassium, dissolved | mg/L | MW-21A | 04/15/2011 | ND | 0.5000 | |
| Potassium, dissolved | mg/L | MW-21A | 01/12/2012 | ND | 0.5000 | |
| Potassium, dissolved | mg/L | MW-21A | 05/01/2012 | ND | 0.5000 | |
| Potassium, dissolved | mg/L | MW-21A | 11/14/2012 | ND | 0.5000 | |
| Sodium, dissolved | mg/L | MW-21A | 01/31/2001 | | 60.9000 | |
| Sodium, dissolved | mg/L | MW-21A | 04/25/2001 | | 80.5000 | |
| Sodium, dissolved | mg/L | MW-21A | 08/28/2001 | | 21.4000 | |
| Sodium, dissolved | mg/L | MW-21A | 11/06/2001 | | 34.1000 | |
| Sodium, dissolved | mg/L | MW-21A | 01/30/2002 | | 29.8000 | |
| Sodium, dissolved | mg/L | MW-21A | 04/10/2002 | | 51.8000 | |
| Sodium, dissolved | mg/L | MW-21A | 07/25/2002 | | 33.6000 | |
| Sodium, dissolved | mg/L | MW-21A | 02/26/2003 | | 43.0000 | |
| Sodium, dissolved | mg/L | MW-21A | 05/14/2003 | | 36.0000 | |
| Sodium, dissolved | mg/L | MW-21A | 08/19/2003 | | 31.0000 | |
| Sodium, dissolved | mg/L | MW-21A | 11/20/2003 | | 24.0000 | |
| Sodium, dissolved | mg/L | MW-21A | 04/21/2004 | | 28.0000 | |
| Sodium, dissolved | mg/L | MW-21A | 05/25/2005 | | 46.0000 | |
| Sodium, dissolved | mg/L | MW-21A | 10/27/2005 | | 26.0000 | |
| Sodium, dissolved | mg/L | MW-21A | 05/10/2006 | | 31.0000 | |
| Sodium, dissolved | mg/L | MW-21A | 11/22/2006 | | 23.0000 | |
| Sodium, dissolved | mg/L | MW-21A | 05/09/2007 | | 24.0000 | |
| Sodium, dissolved | mg/L | MW-21A | 11/08/2007 | | 20.0000 | |
| Sodium, dissolved | mg/L | MW-21A | 05/21/2008 | | 20.0000 | |
| Sodium, dissolved | mg/L | MW-21A | 11/12/2008 | | 19.0000 | |

* - Outlier for that well and constituent.
ND = Not detected, result = detection limit.

# Table 1

## Upgradient Data

| Constituent | Units | Well | Date | | Result | |
|---|---|---|---|---|---|---|
| Sodium, dissolved | mg/L | MW-21A | 05/06/2009 | | 23.0000 | |
| Sodium, dissolved | mg/L | MW-21A | 11/18/2009 | | 20.0000 | |
| Sodium, dissolved | mg/L | MW-21A | 04/21/2010 | | 24.0000 | |
| Sodium, dissolved | mg/L | MW-21A | 11/24/2010 | | 22.0000 | |
| Sodium, dissolved | mg/L | MW-21A | 04/15/2011 | | 26.0000 | |
| Sodium, dissolved | mg/L | MW-21A | 01/12/2012 | | 24.0000 | |
| Sodium, dissolved | mg/L | MW-21A | 05/01/2012 | | 19.0000 | |
| Sodium, dissolved | mg/L | MW-21A | 11/14/2012 | | 19.0000 | |
| Total dissolved solids (tds) | mg/L | MW-21A | 01/31/2001 | | 446.0000 | |
| Total dissolved solids (tds) | mg/L | MW-21A | 04/25/2001 | | 608.0000 | * |
| Total dissolved solids (tds) | mg/L | MW-21A | 07/12/2001 | | 241.0000 | |
| Total dissolved solids (tds) | mg/L | MW-21A | 08/28/2001 | | 316.0000 | |
| Total dissolved solids (tds) | mg/L | MW-21A | 11/06/2001 | | 287.0000 | |
| Total dissolved solids (tds) | mg/L | MW-21A | 01/30/2002 | | 335.0000 | |
| Total dissolved solids (tds) | mg/L | MW-21A | 04/10/2002 | | 486.0000 | |
| Total dissolved solids (tds) | mg/L | MW-21A | 07/25/2002 | | 275.0000 | |
| Total dissolved solids (tds) | mg/L | MW-21A | 02/26/2003 | | 270.0000 | |
| Total dissolved solids (tds) | mg/L | MW-21A | 05/14/2003 | | 270.0000 | |
| Total dissolved solids (tds) | mg/L | MW-21A | 08/19/2003 | | 290.0000 | |
| Total dissolved solids (tds) | mg/L | MW-21A | 11/20/2003 | | 260.0000 | |
| Total dissolved solids (tds) | mg/L | MW-21A | 04/21/2004 | | 230.0000 | |
| Total dissolved solids (tds) | mg/L | MW-21A | 05/25/2005 | | 280.0000 | |
| Total dissolved solids (tds) | mg/L | MW-21A | 10/27/2005 | | 240.0000 | |
| Total dissolved solids (tds) | mg/L | MW-21A | 05/10/2006 | | 260.0000 | |
| Total dissolved solids (tds) | mg/L | MW-21A | 11/22/2006 | | 180.0000 | |
| Total dissolved solids (tds) | mg/L | MW-21A | 05/09/2007 | | 190.0000 | |
| Total dissolved solids (tds) | mg/L | MW-21A | 11/08/2007 | | 200.0000 | |
| Total dissolved solids (tds) | mg/L | MW-21A | 05/21/2008 | | 190.0000 | |
| Total dissolved solids (tds) | mg/L | MW-21A | 11/12/2008 | | 200.0000 | |
| Total dissolved solids (tds) | mg/L | MW-21A | 05/06/2009 | | 190.0000 | |
| Total dissolved solids (tds) | mg/L | MW-21A | 11/18/2009 | | 190.0000 | |
| Total dissolved solids (tds) | mg/L | MW-21A | 04/21/2010 | | 180.0000 | |
| Total dissolved solids (tds) | mg/L | MW-21A | 11/24/2010 | | 190.0000 | |
| Total dissolved solids (tds) | mg/L | MW-21A | 04/15/2011 | | 180.0000 | |
| Total dissolved solids (tds) | mg/L | MW-21A | 01/12/2012 | | 180.0000 | |
| Total dissolved solids (tds) | mg/L | MW-21A | 05/01/2012 | | 180.0000 | |
| Total dissolved solids (tds) | mg/L | MW-21A | 11/14/2012 | | 200.0000 | |
| Total organic carbon (toc) | mg/L | MW-21A | 01/31/2001 | | 2.1000 | |
| Total organic carbon (toc) | mg/L | MW-21A | 04/25/2001 | | 2.8000 | |
| Total organic carbon (toc) | mg/L | MW-21A | 08/28/2001 | | 1.5000 | |
| Total organic carbon (toc) | mg/L | MW-21A | 11/06/2001 | | 2.1000 | |
| Total organic carbon (toc) | mg/L | MW-21A | 01/30/2002 | | 2.4000 | |
| Total organic carbon (toc) | mg/L | MW-21A | 04/10/2002 | | 1.8000 | |
| Total organic carbon (toc) | mg/L | MW-21A | 07/25/2002 | | 2.3000 | |

* - Outlier for that well and constituent.
ND = Not detected, result = detection limit.

# Table 1

## Upgradient Data

| Constituent | Units | Well | Date | | Result | |
|---|---|---|---|---|---|---|
| Total organic carbon (toc) | mg/L | MW-21A | 02/26/2003 | | 1.3000 | |
| Total organic carbon (toc) | mg/L | MW-21A | 05/14/2003 | | 1.4000 | |
| Total organic carbon (toc) | mg/L | MW-21A | 08/19/2003 | | 1.5000 | |
| Total organic carbon (toc) | mg/L | MW-21A | 11/19/2003 | ND | 1.0000 | |
| Total organic carbon (toc) | mg/L | MW-21A | 04/21/2004 | | 1.9000 | |
| Total organic carbon (toc) | mg/L | MW-21A | 05/25/2005 | | 1.4000 | |
| Total organic carbon (toc) | mg/L | MW-21A | 10/27/2005 | | 1.1000 | |
| Total organic carbon (toc) | mg/L | MW-21A | 05/10/2006 | | 2.4000 | |
| Total organic carbon (toc) | mg/L | MW-21A | 11/22/2006 | | 2.4000 | |
| Total organic carbon (toc) | mg/L | MW-21A | 05/09/2007 | | 1.3000 | |
| Total organic carbon (toc) | mg/L | MW-21A | 11/08/2007 | ND | 1.0000 | |
| Total organic carbon (toc) | mg/L | MW-21A | 05/21/2008 | ND | 1.0000 | |
| Total organic carbon (toc) | mg/L | MW-21A | 11/12/2008 | | 1.3000 | |
| Total organic carbon (toc) | mg/L | MW-21A | 05/06/2009 | | 1.5000 | |
| Total organic carbon (toc) | mg/L | MW-21A | 11/18/2009 | | 1.1000 | |
| Total organic carbon (toc) | mg/L | MW-21A | 04/21/2010 | | 1.3000 | |
| Total organic carbon (toc) | mg/L | MW-21A | 11/24/2010 | | 2.1000 | |
| Total organic carbon (toc) | mg/L | MW-21A | 04/15/2011 | | 1.2000 | |
| Total organic carbon (toc) | mg/L | MW-21A | 01/12/2012 | | 1.2000 | |
| Total organic carbon (toc) | mg/L | MW-21A | 05/01/2012 | | 1.2000 | |
| Total organic carbon (toc) | mg/L | MW-21A | 11/14/2012 | | 1.4000 | |

* - Outlier for that well and constituent.
ND = Not detected, result = detection limit.

# Table 2

## Shapiro Wilk Test of Normality for Multiple Groups

| Constituent | N (Detects) | Detect Freq | G raw | G log | Critical Value | Limit Type |
|---|---|---|---|---|---|---|
| Alkalinity, bicarbonate (as caco3) | 28 | 1.000 | 1.345 | 1.002 | 2.326 | normal |
| Chloride | 28 | 1.000 | 4.756 | 3.806 | 2.326 | nonpar |
| Magnesium, dissolved | 28 | 1.000 | 0.856 | 1.157 | 2.326 | normal |
| Potassium, dissolved | 5 | 0.192 | 0.300 | 0.264 | 2.326 | nonpar |
| Sodium, dissolved | 28 | 1.000 | 4.341 | 2.648 | 2.326 | nonpar |
| Total dissolved solids (tds) | 28 | 1.000 | 3.863 | 2.802 | 2.326 | nonpar |
| Total organic carbon (toc) | 25 | 0.893 | 2.484 | 2.161 | 2.326 | lognor |

Fit to distribution is confirmed if G < critical value.
If detection frequency is < 50% nonparametric or Poisson limit is used

# Table 3

## Summary Statistics and Prediction Limits

| Constituent | Units | Model Type | N | Detect | Mean | SD | Pred Limit | Conf* |
|---|---|---|---|---|---|---|---|---|
| Alkalinity, bicarbonate (as caco3) | mg/L | normal | 28 | 28 | 141.6071 | 27.6772 | 211.2448 | |
| Chloride | mg/L | nonpar | 28 | 28 | | | 16.0000 | 0.99 |
| Magnesium, dissolved | mg/L | normal | 28 | 28 | 12.8393 | 2.8239 | 19.9444 | |
| Potassium, dissolved | mg/L | nonpar | 26 | 5 | | | 0.9100 | 0.99 |
| Sodium, dissolved | mg/L | nonpar | 28 | 28 | | | 60.9000 | 0.99 |
| Total dissolved solids (tds) | mg/L | nonpar | 28 | 28 | | | 446.0000 | 0.99 |
| Total organic carbon (toc) | mg/L | lognor | 28 | 25 | 0.8659 | 0.3498 | 4.7315 | |

* - Confidence level for passing initial test or one verification resample at all downgradient wells for a single constituent (nonparametric test only).
Model Type refers to type of prediction limit.
For lognormal limit, mean and sd in natural log units and prediction limit in original units.
All sample sizes and statistics are based on outlier free data.
For nonparametric limits, median reporting limits are substituted for extreme reporting limit values.

## Worksheet 1

## Alkalinity, bicarbonate (as caco3) (mg/L)

## Normal Prediction Limit

| Step | Equation | Description |
|---|---|---|
| 1 | $\overline{X}$ = **sum[X]** / **N**<br>= **3965.0** / **28**<br>= **141.607** | Compute upgradient mean. |
| 2 | S = ( (**sum[X$^2$]** - **sum[X]**$^2$/**N**) / (**N**-1) )$^{½}$<br>= ( (**582155.0** - **1.57**x**10**$^7$/**28**) / (**28**-1) )$^{½}$<br>= **27.677** | Compute upgradient sd. |
| 3 | alpha = min[ (1-.95$^{1/K}$)$^{½}$ or .01 ]<br>= min[ (1-.95$^{1/7}$)$^{½}$ or .01 ]<br>= **0.01** | Adjusted per comparison false positive rate. Pass initial or 1 resample. |
| 4 | PL = $\overline{X}$ + **tS**(1+1/**N**)$^{½}$<br>= **141.607** + (**2.472*****27.677**)(1+1/**28**)$^{½}$<br>= **211.245** | One-sided normal prediction limit (t is Student's t on N-1 degrees of freedom and 1-alpha confidence level). |

## Worksheet 2

## Chloride (mg/L)

## Nonparametric Prediction Limit

| Step | Equation | Description |
|---|---|---|
| 1 | PL = 2nd max(X)<br>= **16.0** | Compute nonparametric prediction limit as 2nd largest background det value. |
| 2 | Confidence = **0.99** | Confidence level is based on N, K and resampling strategy (see Gibbons 1994). |

## Worksheet 3

## Magnesium, dissolved (mg/L)

## Normal Prediction Limit

| Step | Equation | Description |
|---|---|---|
| 1 | $\overline{X}$ = **sum[X] / N**<br>= **359.5 / 28**<br>= **12.839** | Compute upgradient mean. |
| 2 | S = ( (**sum[X$^2$]** - **sum[X]**$^2$/**N**) / (**N**-1) )$^{½}$<br>= ( (**4831.03** - **129240.25**/**28**) / (**28**-1) )$^{½}$<br>= **2.824** | Compute upgradient sd. |
| 3 | alpha = min[ (1-.95$^{1/K}$)$^{½}$ or .01 ]<br>= min[ (1-.95$^{1/7}$)$^{½}$ or .01 ]<br>= **0.01** | Adjusted per comparison false positive rate. Pass initial or 1 resample. |
| 4 | PL = $\overline{X}$ + **tS**(1+1/**N**)$^{½}$<br>= **12.839** + (**2.472*****2.824**)(1+1/**28**)$^{½}$<br>= **19.944** | One-sided normal prediction limit (t is Student's t on N-1 degrees of freedom and 1-alpha confidence level). |

## Worksheet 4

## Potassium, dissolved (mg/L)

## Nonparametric Prediction Limit

| Step | Equation | Description |
|---|---|---|
| 1 | PL = 2nd max(X)<br>= **0.91** | Compute nonparametric prediction limit as largest background det value. |
| 2 | Confidence = **0.99** | Confidence level is based on N, K and resampling strategy (see Gibbons 1994). |

## Worksheet 5

## Sodium, dissolved (mg/L)

## Nonparametric Prediction Limit

| Step | Equation | Description |
|---|---|---|
| 1 | PL = 2nd max(X)<br>= 6**0.9** | Compute nonparametric prediction limit as 2nd largest background det value. |
| 2 | Confidence = **0.99** | Confidence level is based on N, K and resampling strategy (see Gibbons 1994). |

## Worksheet 6

## Total dissolved solids (tds) (mg/L)

## Nonparametric Prediction Limit

| Step | Equation | Description |
|---|---|---|
| 1 | PL = 2nd max(X)<br>= **446.0** | Compute nonparametric prediction limit as 2nd largest background det value. |
| 2 | Confidence = **0.99** | Confidence level is based on N, K and resampling strategy (see Gibbons 1994). |

## Worksheet 7

## Total organic carbon (toc) (mg/L)

## Lognormal Prediction Limit

| Step | Equation | Description |
|---|---|---|
| 1 | $Y = \log_e(X+1)$ | Transform to natural logarithmic scale. |
| 2 | $\overline{Y}_1 = \mathbf{sum[Y_1]} / \mathbf{N_1}$<br>$= \mathbf{24.245} / \mathbf{25}$<br>$= \mathbf{0.97}$ | Compute mean of $N_1$ detected log transformed measurements. |
| 3 | $S_{Y_1} = ( (\mathbf{sum[Y_1^2]} - \mathbf{sum[Y_1]}^2/\mathbf{N_1}) / (\mathbf{N_1}-1) )^{½}$<br>$= ( (\mathbf{24.293} - \mathbf{587.818}/\mathbf{25}) / (\mathbf{25}-1) )^{½}$<br>$= \mathbf{0.18}$ | Compute sd of $N_1$ detected log transformed measurements. |
| 4 | $\overline{Y} = (1 - \mathbf{N_0}/\mathbf{N})\ \overline{\mathbf{Y}}_\mathbf{1}$<br>$= (1 - \mathbf{3}/\mathbf{28})\ \mathbf{0.97}$<br>$= \mathbf{0.866}$ | Compute adjusted mean (log scale). |
| 5 | $S_Y = [ (1 - \mathbf{N_0}/\mathbf{N}) * \mathbf{S_{Y_1}}^2 + (\mathbf{N_0}/\mathbf{N}) ( 1 - (\mathbf{N_0}-1)/(\mathbf{N}-1) ) \overline{\mathbf{Y}}_\mathbf{1}^{\,2} ]^{½}$<br>$= [ (1 - \mathbf{3}/\mathbf{28}) * \mathbf{0.18}^2 + (\mathbf{3}/\mathbf{28}) ( 1 - (\mathbf{3}-1)/(\mathbf{28}-1) ) \mathbf{0.97}^2 ]^{½}$<br>$= \mathbf{0.35}$ | Compute adjusted sd (log scale). |
| 6 | alpha = min[ $(1-.95^{1/\mathbf{K}})^{½}$ or .01 ]<br>= min[ $(1-.95^{1/\mathbf{7}})^{½}$ or .01 ]<br>= **0.01** | Adjusted per comparison false positive rate. Pass initial or 1 resample. |
| 7 | $PL = \exp[\overline{\mathbf{Y}} + \mathbf{tS_Y}(1+1/\mathbf{N})^{½}]-1$<br>$= \exp[\mathbf{0.866} + (\mathbf{2.472}*\mathbf{0.35})(1+1/\mathbf{28})^{½}]-1$<br>$= \mathbf{4.732}$ | One-sided lognormal prediction limit (t is Student's t on N-1 degrees of freedom and 1-alpha confidence level). |

# Background Groundwater Analytical Results and Prediction Limits for Deep (Sand and Gravel) Compliance Monitoring Wells

**MW-12B**

# Table 1

## Upgradient Data

| Constituent | Units | Well | Date | | Result | |
|---|---|---|---|---|---|---|
| Alkalinity, bicarbonate (as caco3) | mg/L | MW-12B | 12/28/1995 | | 216.0000 | |
| Alkalinity, bicarbonate (as caco3) | mg/L | MW-12B | 03/29/1996 | | 502.0000 | * |
| Alkalinity, bicarbonate (as caco3) | mg/L | MW-12B | 05/24/1996 | | 254.0000 | |
| Alkalinity, bicarbonate (as caco3) | mg/L | MW-12B | 09/30/1996 | | 210.0000 | |
| Alkalinity, bicarbonate (as caco3) | mg/L | MW-12B | 01/14/1997 | | 22.1000 | * |
| Alkalinity, bicarbonate (as caco3) | mg/L | MW-12B | 04/02/1997 | | 224.0000 | |
| Alkalinity, bicarbonate (as caco3) | mg/L | MW-12B | 05/20/1997 | | 243.0000 | |
| Alkalinity, bicarbonate (as caco3) | mg/L | MW-12B | 09/10/1997 | | 263.0000 | |
| Alkalinity, bicarbonate (as caco3) | mg/L | MW-12B | 12/22/1997 | | 217.0000 | |
| Alkalinity, bicarbonate (as caco3) | mg/L | MW-12B | 03/18/1998 | | 235.0000 | |
| Alkalinity, bicarbonate (as caco3) | mg/L | MW-12B | 04/30/1998 | | 250.0000 | |
| Alkalinity, bicarbonate (as caco3) | mg/L | MW-12B | 08/21/1998 | | 262.0000 | |
| Alkalinity, bicarbonate (as caco3) | mg/L | MW-12B | 12/17/1998 | | 220.0000 | |
| Alkalinity, bicarbonate (as caco3) | mg/L | MW-12B | 09/16/1999 | | 251.0000 | |
| Alkalinity, bicarbonate (as caco3) | mg/L | MW-12B | 02/08/2000 | | 236.0000 | |
| Alkalinity, bicarbonate (as caco3) | mg/L | MW-12B | 05/30/2000 | | 237.0000 | |
| Alkalinity, bicarbonate (as caco3) | mg/L | MW-12B | 04/21/2004 | | 210.0000 | |
| Alkalinity, bicarbonate (as caco3) | mg/L | MW-12B | 11/09/2004 | | 260.0000 | |
| Alkalinity, bicarbonate (as caco3) | mg/L | MW-12B | 05/25/2005 | | 240.0000 | |
| Alkalinity, bicarbonate (as caco3) | mg/L | MW-12B | 10/25/2005 | | 250.0000 | |
| Alkalinity, bicarbonate (as caco3) | mg/L | MW-12B | 05/09/2006 | | 240.0000 | |
| Alkalinity, bicarbonate (as caco3) | mg/L | MW-12B | 10/17/2006 | | 260.0000 | |
| Alkalinity, bicarbonate (as caco3) | mg/L | MW-12B | 05/08/2007 | | 250.0000 | |
| Alkalinity, bicarbonate (as caco3) | mg/L | MW-12B | 11/08/2007 | | 250.0000 | |
| Alkalinity, bicarbonate (as caco3) | mg/L | MW-12B | 05/20/2008 | | 240.0000 | |
| Alkalinity, bicarbonate (as caco3) | mg/L | MW-12B | 11/11/2008 | | 230.0000 | |
| Alkalinity, bicarbonate (as caco3) | mg/L | MW-12B | 05/05/2009 | | 200.0000 | |
| Alkalinity, bicarbonate (as caco3) | mg/L | MW-12B | 11/17/2009 | | 210.0000 | |
| Alkalinity, bicarbonate (as caco3) | mg/L | MW-12B | 04/20/2010 | | 180.0000 | |
| Alkalinity, bicarbonate (as caco3) | mg/L | MW-12B | 10/05/2010 | | 260.0000 | |
| Alkalinity, bicarbonate (as caco3) | mg/L | MW-12B | 04/14/2011 | | 180.0000 | |
| Alkalinity, bicarbonate (as caco3) | mg/L | MW-12B | 11/02/2011 | | 260.0000 | |
| Alkalinity, bicarbonate (as caco3) | mg/L | MW-12B | 05/02/2012 | | 210.0000 | |
| Alkalinity, bicarbonate (as caco3) | mg/L | MW-12B | 11/13/2012 | | 210.0000 | |
| Magnesium, dissolved | mg/L | MW-12B | 12/28/1995 | | 31.6000 | |
| Magnesium, dissolved | mg/L | MW-12B | 03/29/1996 | | 32.8000 | |
| Magnesium, dissolved | mg/L | MW-12B | 05/24/1996 | | 31.6000 | |
| Magnesium, dissolved | mg/L | MW-12B | 09/30/1996 | | 15.1000 | |
| Magnesium, dissolved | mg/L | MW-12B | 01/14/1997 | | 1.9000 | * |
| Magnesium, dissolved | mg/L | MW-12B | 04/02/1997 | | 29.6000 | |
| Magnesium, dissolved | mg/L | MW-12B | 05/20/1997 | | 31.1000 | |
| Magnesium, dissolved | mg/L | MW-12B | 09/10/1997 | | 29.5000 | |
| Magnesium, dissolved | mg/L | MW-12B | 12/22/1997 | | 22.5000 | |
| Magnesium, dissolved | mg/L | MW-12B | 03/18/1998 | | 27.2000 | |

* - Outlier for that well and constituent.
ND = Not detected, result = detection limit.

# Table 1

## Upgradient Data

| Constituent | Units | Well | Date | | Result | |
|---|---|---|---|---|---|---|
| Magnesium, dissolved | mg/L | MW-12B | 04/30/1998 | | 27.8000 | |
| Magnesium, dissolved | mg/L | MW-12B | 08/21/1998 | | 31.3000 | |
| Magnesium, dissolved | mg/L | MW-12B | 12/17/1998 | | 24.2000 | |
| Magnesium, dissolved | mg/L | MW-12B | 09/16/1999 | | 31.3000 | |
| Magnesium, dissolved | mg/L | MW-12B | 02/08/2000 | | 24.5000 | |
| Magnesium, dissolved | mg/L | MW-12B | 05/30/2000 | | 30.5000 | |
| Magnesium, dissolved | mg/L | MW-12B | 11/07/2000 | | 31.2000 | |
| Magnesium, dissolved | mg/L | MW-12B | 04/25/2001 | | 37.9000 | |
| Magnesium, dissolved | mg/L | MW-12B | 11/07/2001 | | 29.7000 | |
| Magnesium, dissolved | mg/L | MW-12B | 04/10/2002 | | 27.4000 | |
| Magnesium, dissolved | mg/L | MW-12B | 10/08/2002 | | 29.0000 | |
| Magnesium, dissolved | mg/L | MW-12B | 05/14/2003 | | 29.0000 | |
| Magnesium, dissolved | mg/L | MW-12B | 11/19/2003 | | 28.0000 | |
| Magnesium, dissolved | mg/L | MW-12B | 04/21/2004 | | 22.0000 | |
| Magnesium, dissolved | mg/L | MW-12B | 11/09/2004 | | 28.0000 | |
| Magnesium, dissolved | mg/L | MW-12B | 05/25/2005 | | 25.0000 | |
| Magnesium, dissolved | mg/L | MW-12B | 10/25/2005 | | 28.0000 | |
| Magnesium, dissolved | mg/L | MW-12B | 05/09/2006 | | 26.0000 | |
| Magnesium, dissolved | mg/L | MW-12B | 10/17/2006 | | 28.0000 | |
| Magnesium, dissolved | mg/L | MW-12B | 05/08/2007 | | 26.0000 | |
| Magnesium, dissolved | mg/L | MW-12B | 11/08/2007 | | 25.0000 | |
| Magnesium, dissolved | mg/L | MW-12B | 05/20/2008 | | 26.0000 | |
| Magnesium, dissolved | mg/L | MW-12B | 11/11/2008 | | 21.0000 | |
| Magnesium, dissolved | mg/L | MW-12B | 05/05/2009 | | 21.0000 | |
| Magnesium, dissolved | mg/L | MW-12B | 11/17/2009 | | 19.0000 | |
| Magnesium, dissolved | mg/L | MW-12B | 04/20/2010 | | 16.0000 | |
| Magnesium, dissolved | mg/L | MW-12B | 10/05/2010 | | 27.0000 | |
| Magnesium, dissolved | mg/L | MW-12B | 04/14/2011 | | 14.0000 | |
| Magnesium, dissolved | mg/L | MW-12B | 11/02/2011 | | 24.0000 | |
| Magnesium, dissolved | mg/L | MW-12B | 05/02/2012 | | 22.0000 | |
| Magnesium, dissolved | mg/L | MW-12B | 11/13/2012 | | 19.0000 | |
| Potassium, dissolved | mg/L | MW-12B | 12/28/1995 | | 0.9500 | |
| Potassium, dissolved | mg/L | MW-12B | 03/29/1996 | | 0.8900 | |
| Potassium, dissolved | mg/L | MW-12B | 05/24/1996 | | 0.7900 | |
| Potassium, dissolved | mg/L | MW-12B | 09/30/1996 | | 0.6100 | |
| Potassium, dissolved | mg/L | MW-12B | 01/14/1997 | | 0.4800 | |
| Potassium, dissolved | mg/L | MW-12B | 04/02/1997 | | 0.9300 | |
| Potassium, dissolved | mg/L | MW-12B | 05/20/1997 | | 0.6700 | |
| Potassium, dissolved | mg/L | MW-12B | 09/10/1997 | | 0.5800 | |
| Potassium, dissolved | mg/L | MW-12B | 12/22/1997 | | 0.7400 | |
| Potassium, dissolved | mg/L | MW-12B | 03/18/1998 | | 0.5700 | |
| Potassium, dissolved | mg/L | MW-12B | 04/30/1998 | | 0.8500 | |
| Potassium, dissolved | mg/L | MW-12B | 08/21/1998 | | 0.8100 | |
| Potassium, dissolved | mg/L | MW-12B | 12/17/1998 | ND | 2.0000 | * |

* - Outlier for that well and constituent.
ND = Not detected, result = detection limit.

# Table 1

## Upgradient Data

| Constituent | Units | Well | Date | | Result | |
|---|---|---|---|---|---|---|
| Potassium, dissolved | mg/L | MW-12B | 09/16/1999 | | 0.8800 | |
| Potassium, dissolved | mg/L | MW-12B | 02/08/2000 | | 0.6500 | |
| Potassium, dissolved | mg/L | MW-12B | 05/30/2000 | | 0.7700 | |
| Potassium, dissolved | mg/L | MW-12B | 11/07/2000 | | 0.7300 | |
| Potassium, dissolved | mg/L | MW-12B | 04/25/2001 | | 0.7000 | |
| Potassium, dissolved | mg/L | MW-12B | 11/07/2001 | | 0.6800 | |
| Potassium, dissolved | mg/L | MW-12B | 04/10/2002 | ND | 0.5000 | |
| Potassium, dissolved | mg/L | MW-12B | 10/08/2002 | ND | 0.5000 | |
| Potassium, dissolved | mg/L | MW-12B | 05/14/2003 | | 0.6500 | |
| Potassium, dissolved | mg/L | MW-12B | 11/19/2003 | ND | 0.5000 | |
| Potassium, dissolved | mg/L | MW-12B | 04/21/2004 | ND | 0.5000 | |
| Potassium, dissolved | mg/L | MW-12B | 11/09/2004 | | 0.5000 | |
| Potassium, dissolved | mg/L | MW-12B | 05/25/2005 | ND | 0.5000 | |
| Potassium, dissolved | mg/L | MW-12B | 10/25/2005 | | 0.5100 | |
| Potassium, dissolved | mg/L | MW-12B | 05/09/2006 | | 0.5400 | |
| Potassium, dissolved | mg/L | MW-12B | 10/17/2006 | | 0.7700 | |
| Potassium, dissolved | mg/L | MW-12B | 05/08/2007 | | 0.5400 | |
| Potassium, dissolved | mg/L | MW-12B | 11/08/2007 | ND | 0.5000 | |
| Potassium, dissolved | mg/L | MW-12B | 05/20/2008 | | 0.7000 | |
| Potassium, dissolved | mg/L | MW-12B | 11/11/2008 | | 0.7500 | |
| Potassium, dissolved | mg/L | MW-12B | 05/05/2009 | | 0.5600 | |
| Potassium, dissolved | mg/L | MW-12B | 11/17/2009 | | 0.5700 | |
| Potassium, dissolved | mg/L | MW-12B | 04/20/2010 | ND | 0.5000 | |
| Potassium, dissolved | mg/L | MW-12B | 10/05/2010 | | 0.6600 | |
| Potassium, dissolved | mg/L | MW-12B | 04/14/2011 | | 0.6900 | |
| Potassium, dissolved | mg/L | MW-12B | 11/02/2011 | | 0.6000 | |
| Potassium, dissolved | mg/L | MW-12B | 05/02/2012 | | 0.5500 | |
| Potassium, dissolved | mg/L | MW-12B | 11/13/2012 | | 0.5500 | |
| Sodium, dissolved | mg/L | MW-12B | 12/28/1995 | | 44.0000 | |
| Sodium, dissolved | mg/L | MW-12B | 03/29/1996 | | 55.0000 | |
| Sodium, dissolved | mg/L | MW-12B | 05/24/1996 | | 51.2000 | |
| Sodium, dissolved | mg/L | MW-12B | 09/30/1996 | | 33.6000 | |
| Sodium, dissolved | mg/L | MW-12B | 01/14/1997 | | 5.8000 | * |
| Sodium, dissolved | mg/L | MW-12B | 04/02/1997 | | 47.2000 | |
| Sodium, dissolved | mg/L | MW-12B | 05/20/1997 | | 48.6000 | |
| Sodium, dissolved | mg/L | MW-12B | 09/10/1997 | | 49.8000 | |
| Sodium, dissolved | mg/L | MW-12B | 12/22/1997 | | 38.2000 | |
| Sodium, dissolved | mg/L | MW-12B | 03/18/1998 | | 43.6000 | |
| Sodium, dissolved | mg/L | MW-12B | 04/30/1998 | | 49.4000 | |
| Sodium, dissolved | mg/L | MW-12B | 08/21/1998 | | 53.2000 | |
| Sodium, dissolved | mg/L | MW-12B | 12/17/1998 | | 39.9000 | |
| Sodium, dissolved | mg/L | MW-12B | 09/16/1999 | | 55.4000 | |
| Sodium, dissolved | mg/L | MW-12B | 02/08/2000 | | 41.6000 | |
| Sodium, dissolved | mg/L | MW-12B | 05/30/2000 | | 56.0000 | |

* - Outlier for that well and constituent.
ND = Not detected, result = detection limit.

# Table 1

## Upgradient Data

| Constituent | Units | Well | Date | | Result | |
|---|---|---|---|---|---|---|
| Sodium, dissolved | mg/L | MW-12B | 11/07/2000 | | 56.1000 | |
| Sodium, dissolved | mg/L | MW-12B | 04/25/2001 | | 62.6000 | |
| Sodium, dissolved | mg/L | MW-12B | 11/07/2001 | | 55.9000 | |
| Sodium, dissolved | mg/L | MW-12B | 04/10/2002 | | 45.5000 | |
| Sodium, dissolved | mg/L | MW-12B | 10/08/2002 | | 52.0000 | |
| Sodium, dissolved | mg/L | MW-12B | 05/14/2003 | | 44.0000 | |
| Sodium, dissolved | mg/L | MW-12B | 11/19/2003 | | 50.0000 | |
| Sodium, dissolved | mg/L | MW-12B | 04/21/2004 | | 35.0000 | |
| Sodium, dissolved | mg/L | MW-12B | 11/09/2004 | | 56.0000 | |
| Sodium, dissolved | mg/L | MW-12B | 05/25/2005 | | 43.0000 | |
| Sodium, dissolved | mg/L | MW-12B | 10/25/2005 | | 48.0000 | |
| Sodium, dissolved | mg/L | MW-12B | 05/09/2006 | | 44.0000 | |
| Sodium, dissolved | mg/L | MW-12B | 10/17/2006 | | 49.0000 | |
| Sodium, dissolved | mg/L | MW-12B | 05/08/2007 | | 43.0000 | |
| Sodium, dissolved | mg/L | MW-12B | 11/08/2007 | | 47.0000 | |
| Sodium, dissolved | mg/L | MW-12B | 05/20/2008 | | 44.0000 | |
| Sodium, dissolved | mg/L | MW-12B | 11/11/2008 | | 39.0000 | |
| Sodium, dissolved | mg/L | MW-12B | 05/05/2009 | | 29.0000 | |
| Sodium, dissolved | mg/L | MW-12B | 11/17/2009 | | 34.0000 | |
| Sodium, dissolved | mg/L | MW-12B | 04/20/2010 | | 21.0000 | |
| Sodium, dissolved | mg/L | MW-12B | 10/05/2010 | | 46.0000 | |
| Sodium, dissolved | mg/L | MW-12B | 04/14/2011 | | 23.0000 | |
| Sodium, dissolved | mg/L | MW-12B | 11/02/2011 | | 43.0000 | |
| Sodium, dissolved | mg/L | MW-12B | 05/02/2012 | | 32.0000 | |
| Sodium, dissolved | mg/L | MW-12B | 11/13/2012 | | 28.0000 | |
| Sulfate | mg/L | MW-12B | 12/28/1995 | | 5.4000 | |
| Sulfate | mg/L | MW-12B | 03/29/1996 | | 4.3000 | |
| Sulfate | mg/L | MW-12B | 05/24/1996 | | 171.0000 | * |
| Sulfate | mg/L | MW-12B | 09/30/1996 | | 1.9000 | |
| Sulfate | mg/L | MW-12B | 01/14/1997 | | 2.0000 | |
| Sulfate | mg/L | MW-12B | 04/02/1997 | ND | 10.0000 | |
| Sulfate | mg/L | MW-12B | 05/20/1997 | ND | 1.0000 | |
| Sulfate | mg/L | MW-12B | 09/10/1997 | | 1.4000 | |
| Sulfate | mg/L | MW-12B | 12/22/1997 | | 1.4000 | |
| Sulfate | mg/L | MW-12B | 03/18/1998 | | 6.8000 | |
| Sulfate | mg/L | MW-12B | 04/30/1998 | ND | 1.0000 | |
| Sulfate | mg/L | MW-12B | 08/21/1998 | | 8.6000 | |
| Sulfate | mg/L | MW-12B | 12/17/1998 | | 0.7000 | |
| Sulfate | mg/L | MW-12B | 09/16/1999 | | 5.0000 | |
| Sulfate | mg/L | MW-12B | 02/08/2000 | | 4.4000 | |
| Sulfate | mg/L | MW-12B | 05/30/2000 | | 6.2000 | |
| Sulfate | mg/L | MW-12B | 11/07/2000 | ND | 1.0000 | |
| Sulfate | mg/L | MW-12B | 04/25/2001 | ND | 1.0000 | |
| Sulfate | mg/L | MW-12B | 11/07/2001 | ND | 1.0000 | |

* - Outlier for that well and constituent.
ND = Not detected, result = detection limit.

# Table 1

## Upgradient Data

| Constituent | Units | Well | Date | | Result | |
|---|---|---|---|---|---|---|
| Sulfate | mg/L | MW-12B | 04/10/2002 | ND | 1.0000 | |
| Sulfate | mg/L | MW-12B | 10/08/2002 | | 1.0000 | |
| Sulfate | mg/L | MW-12B | 05/14/2003 | ND | 1.0000 | |
| Sulfate | mg/L | MW-12B | 11/19/2003 | | 1.3000 | |
| Sulfate | mg/L | MW-12B | 04/21/2004 | | 1.2000 | |
| Sulfate | mg/L | MW-12B | 11/09/2004 | ND | 1.0000 | |
| Sulfate | mg/L | MW-12B | 05/25/2005 | ND | 1.0000 | |
| Sulfate | mg/L | MW-12B | 10/25/2005 | | 1.1000 | |
| Sulfate | mg/L | MW-12B | 05/09/2006 | ND | 1.0000 | |
| Sulfate | mg/L | MW-12B | 10/17/2006 | ND | 1.0000 | |
| Sulfate | mg/L | MW-12B | 05/08/2007 | ND | 1.0000 | |
| Sulfate | mg/L | MW-12B | 11/08/2007 | ND | 1.0000 | |
| Sulfate | mg/L | MW-12B | 05/20/2008 | ND | 1.0000 | |
| Sulfate | mg/L | MW-12B | 11/11/2008 | | 1.1000 | |
| Sulfate | mg/L | MW-12B | 05/05/2009 | ND | 1.0000 | |
| Sulfate | mg/L | MW-12B | 11/17/2009 | | 1.5000 | |
| Sulfate | mg/L | MW-12B | 04/20/2010 | ND | 1.0000 | |
| Sulfate | mg/L | MW-12B | 10/05/2010 | ND | 1.0000 | |
| Sulfate | mg/L | MW-12B | 04/14/2011 | | 1.0000 | |
| Sulfate | mg/L | MW-12B | 11/02/2011 | ND | 1.0000 | |
| Sulfate | mg/L | MW-12B | 05/02/2012 | ND | 1.0000 | |
| Sulfate | mg/L | MW-12B | 11/13/2012 | | 1.7000 | |
| Total dissolved solids (tds) | mg/L | MW-12B | 12/28/1995 | | 532.0000 | |
| Total dissolved solids (tds) | mg/L | MW-12B | 03/29/1996 | | 321.0000 | |
| Total dissolved solids (tds) | mg/L | MW-12B | 05/24/1996 | | 726.0000 | |
| Total dissolved solids (tds) | mg/L | MW-12B | 09/30/1996 | | 360.0000 | |
| Total dissolved solids (tds) | mg/L | MW-12B | 01/14/1997 | | 51.0000 | * |
| Total dissolved solids (tds) | mg/L | MW-12B | 04/02/1997 | | 604.0000 | |
| Total dissolved solids (tds) | mg/L | MW-12B | 05/20/1997 | | 788.0000 | |
| Total dissolved solids (tds) | mg/L | MW-12B | 09/10/1997 | | 879.0000 | |
| Total dissolved solids (tds) | mg/L | MW-12B | 12/22/1997 | | 479.0000 | |
| Total dissolved solids (tds) | mg/L | MW-12B | 03/18/1998 | | 852.0000 | |
| Total dissolved solids (tds) | mg/L | MW-12B | 04/30/1998 | | 817.0000 | |
| Total dissolved solids (tds) | mg/L | MW-12B | 08/21/1998 | | 869.0000 | |
| Total dissolved solids (tds) | mg/L | MW-12B | 12/17/1998 | | 504.0000 | |
| Total dissolved solids (tds) | mg/L | MW-12B | 09/16/1999 | | 917.0000 | |
| Total dissolved solids (tds) | mg/L | MW-12B | 02/08/2000 | | 475.0000 | |
| Total dissolved solids (tds) | mg/L | MW-12B | 05/30/2000 | | 818.0000 | |
| Total dissolved solids (tds) | mg/L | MW-12B | 11/07/2000 | | 756.0000 | |
| Total dissolved solids (tds) | mg/L | MW-12B | 04/25/2001 | | 786.0000 | |
| Total dissolved solids (tds) | mg/L | MW-12B | 11/07/2001 | | 657.0000 | |
| Total dissolved solids (tds) | mg/L | MW-12B | 04/10/2002 | | 739.0000 | |
| Total dissolved solids (tds) | mg/L | MW-12B | 10/08/2002 | | 610.0000 | |
| Total dissolved solids (tds) | mg/L | MW-12B | 05/14/2003 | | 660.0000 | |

* - Outlier for that well and constituent.
ND = Not detected, result = detection limit.

# Table 1

## Upgradient Data

| Constituent | Units | Well | Date | | Result | |
|---|---|---|---|---|---|---|
| Total dissolved solids (tds) | mg/L | MW-12B | 11/19/2003 | | 650.0000 | |
| Total dissolved solids (tds) | mg/L | MW-12B | 04/21/2004 | | 440.0000 | |
| Total dissolved solids (tds) | mg/L | MW-12B | 11/09/2004 | | 640.0000 | |
| Total dissolved solids (tds) | mg/L | MW-12B | 05/25/2005 | | 530.0000 | |
| Total dissolved solids (tds) | mg/L | MW-12B | 10/25/2005 | | 620.0000 | |
| Total dissolved solids (tds) | mg/L | MW-12B | 05/09/2006 | | 640.0000 | |
| Total dissolved solids (tds) | mg/L | MW-12B | 10/17/2006 | | 650.0000 | |
| Total dissolved solids (tds) | mg/L | MW-12B | 05/08/2007 | | 640.0000 | |
| Total dissolved solids (tds) | mg/L | MW-12B | 11/08/2007 | | 590.0000 | |
| Total dissolved solids (tds) | mg/L | MW-12B | 05/20/2008 | | 610.0000 | |
| Total dissolved solids (tds) | mg/L | MW-12B | 11/11/2008 | | 480.0000 | |
| Total dissolved solids (tds) | mg/L | MW-12B | 05/05/2009 | | 420.0000 | |
| Total dissolved solids (tds) | mg/L | MW-12B | 11/17/2009 | | 380.0000 | |
| Total dissolved solids (tds) | mg/L | MW-12B | 04/20/2010 | | 280.0000 | |
| Total dissolved solids (tds) | mg/L | MW-12B | 10/05/2010 | | 580.0000 | |
| Total dissolved solids (tds) | mg/L | MW-12B | 04/14/2011 | | 290.0000 | |
| Total dissolved solids (tds) | mg/L | MW-12B | 11/02/2011 | | 510.0000 | |
| Total dissolved solids (tds) | mg/L | MW-12B | 05/02/2012 | | 430.0000 | |
| Total dissolved solids (tds) | mg/L | MW-12B | 11/13/2012 | | 350.0000 | |
| Total organic carbon (toc) | mg/L | MW-12B | 12/28/1995 | ND | 1.0000 | |
| Total organic carbon (toc) | mg/L | MW-12B | 03/29/1996 | | 1.7000 | |
| Total organic carbon (toc) | mg/L | MW-12B | 05/24/1996 | ND | 1.0000 | |
| Total organic carbon (toc) | mg/L | MW-12B | 09/30/1996 | ND | 1.0000 | |
| Total organic carbon (toc) | mg/L | MW-12B | 01/14/1997 | | 2.3000 | |
| Total organic carbon (toc) | mg/L | MW-12B | 04/02/1997 | | 1.2000 | |
| Total organic carbon (toc) | mg/L | MW-12B | 05/20/1997 | ND | 1.0000 | |
| Total organic carbon (toc) | mg/L | MW-12B | 09/10/1997 | ND | 1.0000 | |
| Total organic carbon (toc) | mg/L | MW-12B | 12/22/1997 | | 1.2000 | |
| Total organic carbon (toc) | mg/L | MW-12B | 03/18/1998 | | 56.6000 | * |
| Total organic carbon (toc) | mg/L | MW-12B | 04/30/1998 | | 1.1000 | |
| Total organic carbon (toc) | mg/L | MW-12B | 08/21/1998 | ND | 1.0000 | |
| Total organic carbon (toc) | mg/L | MW-12B | 12/17/1998 | | 0.9000 | |
| Total organic carbon (toc) | mg/L | MW-12B | 09/16/1999 | ND | 1.0000 | |
| Total organic carbon (toc) | mg/L | MW-12B | 02/08/2000 | | 1.0000 | |
| Total organic carbon (toc) | mg/L | MW-12B | 05/30/2000 | | 1.1000 | |
| Total organic carbon (toc) | mg/L | MW-12B | 11/07/2000 | ND | 1.0000 | |
| Total organic carbon (toc) | mg/L | MW-12B | 04/25/2001 | | 1.2000 | |
| Total organic carbon (toc) | mg/L | MW-12B | 11/07/2001 | | 1.4000 | |
| Total organic carbon (toc) | mg/L | MW-12B | 04/10/2002 | | 1.4000 | |
| Total organic carbon (toc) | mg/L | MW-12B | 10/08/2002 | | 1.0000 | |
| Total organic carbon (toc) | mg/L | MW-12B | 05/14/2003 | ND | 1.0000 | |
| Total organic carbon (toc) | mg/L | MW-12B | 11/19/2003 | ND | 1.0000 | |
| Total organic carbon (toc) | mg/L | MW-12B | 04/21/2004 | | 1.4000 | |
| Total organic carbon (toc) | mg/L | MW-12B | 11/09/2004 | | 1.9000 | |

* - Outlier for that well and constituent.
ND = Not detected, result = detection limit.

# Table 1

## Upgradient Data

| Constituent | Units | Well | Date | | Result | |
|---|---|---|---|---|---|---|
| Total organic carbon (toc) | mg/L | MW-12B | 05/25/2005 | ND | 1.0000 | |
| Total organic carbon (toc) | mg/L | MW-12B | 10/25/2005 | ND | 1.0000 | |
| Total organic carbon (toc) | mg/L | MW-12B | 05/09/2006 | | 1.2000 | |
| Total organic carbon (toc) | mg/L | MW-12B | 10/17/2006 | ND | 1.0000 | |
| Total organic carbon (toc) | mg/L | MW-12B | 05/08/2007 | ND | 1.0000 | |
| Total organic carbon (toc) | mg/L | MW-12B | 11/08/2007 | ND | 1.0000 | |
| Total organic carbon (toc) | mg/L | MW-12B | 05/20/2008 | | 1.0000 | |
| Total organic carbon (toc) | mg/L | MW-12B | 11/11/2008 | | 1.1000 | |
| Total organic carbon (toc) | mg/L | MW-12B | 05/05/2009 | | 1.1000 | |
| Total organic carbon (toc) | mg/L | MW-12B | 11/17/2009 | ND | 1.0000 | |
| Total organic carbon (toc) | mg/L | MW-12B | 04/20/2010 | | 1.1000 | |
| Total organic carbon (toc) | mg/L | MW-12B | 10/05/2010 | ND | 1.0000 | |
| Total organic carbon (toc) | mg/L | MW-12B | 04/14/2011 | | 1.9000 | |
| Total organic carbon (toc) | mg/L | MW-12B | 11/02/2011 | | 1.2000 | |
| Total organic carbon (toc) | mg/L | MW-12B | 05/02/2012 | | 1.3000 | |
| Total organic carbon (toc) | mg/L | MW-12B | 11/13/2012 | | 1.0000 | |

* - Outlier for that well and constituent.
ND = Not detected, result = detection limit.

# Table 2

## Shapiro Wilk Test of Normality for Multiple Groups

| Constituent | N (Detects) | Detect Freq | G raw | G log | Critical Value | Limit Type |
|---|---|---|---|---|---|---|
| Alkalinity, bicarbonate (as caco3) | 32 | 1.000 | 2.019 | 2.409 | 2.326 | normal |
| Magnesium, dissolved | 40 | 1.000 | 0.752 | 2.511 | 2.326 | normal |
| Potassium, dissolved | 33 | 0.825 | 0.944 | 0.651 | 2.326 | normal |
| Sodium, dissolved | 40 | 1.000 | 0.834 | 2.801 | 2.326 | normal |
| Sulfate | 20 | 0.500 | 3.185 | 2.348 | 2.326 | nonpar |
| Total dissolved solids (tds) | 40 | 1.000 | 0.428 | 1.462 | 2.326 | normal |
| Total organic carbon (toc) | 23 | 0.575 | 3.300 | 2.680 | 2.326 | nonpar |

Fit to distribution is confirmed if G < critical value.
If detection frequency is < 50% nonparametric or Poisson limit is used

# Table 3

## Summary Statistics and Prediction Limits

| Constituent | Units | Model Type | N | Detect | Mean | SD | Pred Limit | Conf* |
|---|---|---|---|---|---|---|---|---|
| Alkalinity, bicarbonate (as caco3) | mg/L | normal | 32 | 32 | 233.0625 | 23.4245 | 291.4039 | |
| Magnesium, dissolved | mg/L | normal | 40 | 40 | 26.2450 | 5.1259 | 38.8336 | |
| Potassium, dissolved | mg/L | normal | 40 | 33 | 0.5605 | 0.2869 | 1.2651 | |
| Sodium, dissolved | mg/L | normal | 40 | 40 | 44.4200 | 9.5022 | 67.7560 | |
| Sulfate | mg/L | nonpar | 40 | 20 | | | 6.800 | 0.99 |
| Total dissolved solids (tds) | mg/L | normal | 40 | 40 | 596.9750 | 172.3835 | 1020.3248 | |
| Total organic carbon (toc) | mg/L | nonpar | 40 | 23 | | | 1.900 | 0.99 |

* - Confidence level for passing initial test or one verification resample at all downgradient wells for a single constituent (nonparametric test only).
Model Type refers to type of prediction limit.
For lognormal limit, mean and sd in natural log units and prediction limit in original units.
All sample sizes and statistics are based on outlier free data.
For nonparametric limits, median reporting limits are substituted for extreme reporting limit values.

## Worksheet 1

## Alkalinity, bicarbonate (as caco3) (mg/L)

## Normal Prediction Limit

| Step | Equation | Description |
|---|---|---|
| 1 | $\overline{X}$ = **sum[X]** / **N**<br>= **7458.0** / **32**<br>= **233.063** | Compute upgradient mean. |
| 2 | S = ( (**sum[X$^2$]** - **sum[X]**$^2$/**N**) / (**N**-1) )$^{½}$<br>= ( (**1.76**x**10$^6$** - **5.56**x**10$^7$**/**32**) / (**32**-1) )$^{½}$<br>= **23.424** | Compute upgradient sd. |
| 3 | alpha = min[ (1-.95$^{1/K}$)$^{½}$ or .01 ]<br>= min[ (1-.95$^{1/7}$)$^{½}$ or .01 ]<br>= **0.01** | Adjusted per comparison false positive rate. Pass initial or 1 resample. |
| 4 | PL = $\overline{X}$ + **tS**(1+1/**N**)$^{½}$<br>= **233.063** + (**2.453*****23.424**)(1+1/**32**)$^{½}$<br>= **291.404** | One-sided normal prediction limit (t is Student's t on N-1 degrees of freedom and 1-alpha confidence level). |

## Worksheet 2

## Magnesium, dissolved (mg/L)

## Normal Prediction Limit

| Step | Equation | Description |
|---|---|---|
| 1 | $\overline{X}$ = **sum[X] / N**<br>= **1049.8 / 40**<br>= **26.245** | Compute upgradient mean. |
| 2 | S = ( (**sum[X$^2$]** - **sum[X]**$^2$/**N**) / (**N**-1) )$^{½}$<br>= ( (**28576.74** - **1.10**x**10$^6$**/**40**) / (**40**-1) )$^{½}$<br>= **5.126** | Compute upgradient sd. |
| 3 | alpha = min[ (1-.95$^{1/K}$)$^{½}$ or .01 ]<br>= min[ (1-.95$^{1/7}$)$^{½}$ or .01 ]<br>= **0.01** | Adjusted per comparison false positive rate. Pass initial or 1 resample. |
| 4 | PL = $\overline{X}$ + **tS**(1+1/**N**)$^{½}$<br>= **26.245** + (**2.426***5.126**)(1+1/**40**)$^{½}$<br>= **38.834** | One-sided normal prediction limit (t is Student's t on N-1 degrees of freedom and 1-alpha confidence level). |

## Worksheet 3

## Potassium, dissolved (mg/L)

## Normal Prediction Limit

| Step | Equation | Description |
|---|---|---|
| 1 | $\overline{X}_1 = \mathbf{sum[X_1]} / \mathbf{N_1}$<br>$= \mathbf{22.42} / \mathbf{33}$<br>$= \mathbf{0.679}$ | Compute mean of $N_1$ detected measurements. |
| 2 | $S_1 = ( (\mathbf{sum[X_1^2]} - \mathbf{sum[X_1]}^2/\mathbf{N_1}) / (\mathbf{N_1}-1) )^{½}$<br>$= ( (\mathbf{15.774} - \mathbf{502.656}/\mathbf{33}) / (\mathbf{33}-1) )^{½}$<br>$= \mathbf{0.13}$ | Compute sd of $N_1$ detected measurements. |
| 3 | $\overline{X} = (1 - \mathbf{N_0}/\mathbf{N})\ \overline{\mathbf{X}}_\mathbf{1}$<br>$= (1 - \mathbf{7}/\mathbf{40})\ \mathbf{0.679}$<br>$= \mathbf{0.561}$ | Compute adjusted mean. |
| 4 | $S = [ (1 - \mathbf{N_0}/\mathbf{N}) * \mathbf{S_1}^2 + (\mathbf{N_0}/\mathbf{N}) ( 1 - (\mathbf{N_0}-1)/(\mathbf{N}-1) ) \overline{\mathbf{X}}_\mathbf{1}^{\,2} ]^{½}$<br>$= [ (1 - \mathbf{7}/\mathbf{40}) * \mathbf{0.13}^2 + (\mathbf{7}/\mathbf{40}) ( 1 - (\mathbf{7}-1)/(\mathbf{40}-1) ) \mathbf{0.679}^2 ]^{½}$<br>$= \mathbf{0.287}$ | Compute adjusted sd. |
| 5 | $\text{alpha} = \min[ (1-.95^{1/\mathbf{K}})^{½} \text{ or } .01 ]$<br>$= \min[ (1-.95^{1/\mathbf{7}})^{½} \text{ or } .01 ]$<br>$= \mathbf{0.01}$ | Adjusted per comparison false positive rate. Pass initial or 1 resample. |
| 6 | $PL = \overline{\mathbf{X}} + \mathbf{tS}(1+1/\mathbf{N})^{½}$<br>$= \mathbf{0.561} + (\mathbf{2.426}*\mathbf{0.287})(1+1/\mathbf{40})^{½}$<br>$= \mathbf{1.265}$ | One-sided normal prediction limit (t is Student's t on N-1 degrees of freedom and 1-alpha confidence level). |

## Worksheet 4

## Sodium, dissolved (mg/L)

## Normal Prediction Limit

| Step | Equation | Description |
|---|---|---|
| 1 | $\overline{X}$ = **sum[X] / N**<br>= **1776.8 / 40**<br>= **44.42** | Compute upgradient mean. |
| 2 | S = ( (**sum[X$^2$]** - **sum[X]**$^2$/**N**) / (**N**-1) )$^{½}$<br>= ( (**82446.8** - **3.16**x**10$^6$/40**) / (**40**-1) )$^{½}$<br>= **9.502** | Compute upgradient sd. |
| 3 | alpha = min[ (1-.95$^{1/K}$)$^{½}$ or .01 ]<br>= min[ (1-.95$^{1/7}$)$^{½}$ or .01 ]<br>= **0.01** | Adjusted per comparison false positive rate. Pass initial or 1 resample. |
| 4 | PL = $\overline{X}$ + **tS**(1+1/**N**)$^{½}$<br>= **44.42** + (**2.426***9.502)(1+1/**40**)$^{½}$<br>= **67.756** | One-sided normal prediction limit (t is Student's t on N-1 degrees of freedom and 1-alpha confidence level). |

## Worksheet 5

## Sulfate (mg/L)

## Nonparametric Prediction Limit

| Step | Equation | Description |
|---|---|---|
| 1 | PL = 2nd max(X)<br>= 6.**8** | Compute nonparametric prediction limit as 2nd largest background det value. |
| 2 | Confidence = **0.99** | Confidence level is based on N, K and resampling strategy (see Gibbons 1994). |

## Worksheet 6

## Total dissolved solids (tds) (mg/L)

## Normal Prediction Limit

| Step | Equation | Description |
|---|---|---|
| 1 | $\overline{X}$ = **sum[X] / N**<br>= **23879.0 / 40**<br>= **596.975** | Compute upgradient mean. |
| 2 | S = ( (**sum[X$^2$]** - **sum[X]**$^2$**/N**) / (**N**-1) )$^{½}$<br>= ( (**1.54**x**10$^7$** - **5.70**x**10$^8$/40**) / (**40**-1) )$^{½}$<br>= **172.384** | Compute upgradient sd. |
| 3 | alpha = min[ (1-.95$^{1/K}$)$^{½}$ or .01 ]<br>= min[ (1-.95$^{1/7}$)$^{½}$ or .01 ]<br>= **0.01** | Adjusted per comparison false positive rate. Pass initial or 1 resample. |
| 4 | PL = $\overline{X}$ + **tS**(1+1/**N**)$^{½}$<br>= **596.975** + (**2.426*****172.384**)(1+1/**40**)$^{½}$<br>= **1020.325** | One-sided normal prediction limit (t is Student's t on N-1 degrees of freedom and 1-alpha confidence level). |

## Worksheet 7

## Total organic carbon (toc) (mg/L)

## Nonparametric Prediction Limit

| Step | Equation | Description |
|---|---|---|
| 1 | PL = 2nd max(X)<br>= 1**.9** | Compute nonparametric prediction limit - 2nd largest background det value. |
| 2 | Confidence = **0.99** | Confidence level is based on N, K and resampling strategy (see Gibbons 1994). |

MW-14B

# Table 1

## Upgradient Data

| Constituent | Units | Well | Date | | Result | |
|---|---|---|---|---|---|---|
| Alkalinity, bicarbonate (as caco3) | mg/L | MW-14B | 04/03/1997 | | 190.0000 | |
| Alkalinity, bicarbonate (as caco3) | mg/L | MW-14B | 05/20/1997 | | 178.0000 | |
| Alkalinity, bicarbonate (as caco3) | mg/L | MW-14B | 09/11/1997 | | 174.0000 | |
| Alkalinity, bicarbonate (as caco3) | mg/L | MW-14B | 12/30/1997 | | 177.0000 | |
| Alkalinity, bicarbonate (as caco3) | mg/L | MW-14B | 03/19/1998 | | 162.0000 | |
| Alkalinity, bicarbonate (as caco3) | mg/L | MW-14B | 06/11/1998 | | 108.0000 | * |
| Alkalinity, bicarbonate (as caco3) | mg/L | MW-14B | 08/20/1998 | | 169.0000 | |
| Alkalinity, bicarbonate (as caco3) | mg/L | MW-14B | 12/16/1998 | | 168.0000 | |
| Alkalinity, bicarbonate (as caco3) | mg/L | MW-14B | 03/25/1999 | | 158.0000 | |
| Alkalinity, bicarbonate (as caco3) | mg/L | MW-14B | 06/16/1999 | | 166.0000 | |
| Alkalinity, bicarbonate (as caco3) | mg/L | MW-14B | 09/16/1999 | | 169.0000 | |
| Alkalinity, bicarbonate (as caco3) | mg/L | MW-14B | 12/10/1999 | | 175.0000 | |
| Alkalinity, bicarbonate (as caco3) | mg/L | MW-14B | 02/09/2000 | | 172.0000 | |
| Alkalinity, bicarbonate (as caco3) | mg/L | MW-14B | 05/24/2000 | | 154.0000 | |
| Alkalinity, bicarbonate (as caco3) | mg/L | MW-14B | 08/22/2000 | | 165.0000 | |
| Alkalinity, bicarbonate (as caco3) | mg/L | MW-14B | 11/07/2000 | | 173.0000 | |
| Alkalinity, bicarbonate (as caco3) | mg/L | MW-14B | 01/30/2001 | | 178.0000 | |
| Alkalinity, bicarbonate (as caco3) | mg/L | MW-14B | 04/25/2001 | | 187.0000 | |
| Alkalinity, bicarbonate (as caco3) | mg/L | MW-14B | 08/29/2001 | | 177.0000 | |
| Alkalinity, bicarbonate (as caco3) | mg/L | MW-14B | 11/06/2001 | | 180.0000 | |
| Alkalinity, bicarbonate (as caco3) | mg/L | MW-14B | 01/30/2002 | | 179.0000 | |
| Alkalinity, bicarbonate (as caco3) | mg/L | MW-14B | 04/09/2002 | | 188.0000 | |
| Alkalinity, bicarbonate (as caco3) | mg/L | MW-14B | 07/23/2002 | | 180.0000 | |
| Alkalinity, bicarbonate (as caco3) | mg/L | MW-14B | 10/10/2002 | | 190.0000 | |
| Alkalinity, bicarbonate (as caco3) | mg/L | MW-14B | 02/25/2003 | | 190.0000 | |
| Alkalinity, bicarbonate (as caco3) | mg/L | MW-14B | 05/13/2003 | | 190.0000 | |
| Alkalinity, bicarbonate (as caco3) | mg/L | MW-14B | 08/20/2003 | | 180.0000 | |
| Alkalinity, bicarbonate (as caco3) | mg/L | MW-14B | 11/18/2003 | | 210.0000 | |
| Alkalinity, bicarbonate (as caco3) | mg/L | MW-14B | 04/21/2004 | | 190.0000 | |
| Alkalinity, bicarbonate (as caco3) | mg/L | MW-14B | 11/10/2004 | | 210.0000 | |
| Alkalinity, bicarbonate (as caco3) | mg/L | MW-14B | 05/25/2005 | | 220.0000 | |
| Alkalinity, bicarbonate (as caco3) | mg/L | MW-14B | 10/25/2005 | | 190.0000 | |
| Alkalinity, bicarbonate (as caco3) | mg/L | MW-14B | 05/10/2006 | | 200.0000 | |
| Alkalinity, bicarbonate (as caco3) | mg/L | MW-14B | 10/18/2006 | | 200.0000 | |
| Alkalinity, bicarbonate (as caco3) | mg/L | MW-14B | 05/09/2007 | | 210.0000 | |
| Alkalinity, bicarbonate (as caco3) | mg/L | MW-14B | 11/08/2007 | | 190.0000 | |
| Alkalinity, bicarbonate (as caco3) | mg/L | MW-14B | 05/21/2008 | | 190.0000 | |
| Alkalinity, bicarbonate (as caco3) | mg/L | MW-14B | 11/12/2008 | | 210.0000 | |
| Alkalinity, bicarbonate (as caco3) | mg/L | MW-14B | 05/06/2009 | | 210.0000 | |
| Alkalinity, bicarbonate (as caco3) | mg/L | MW-14B | 11/17/2009 | | 220.0000 | |
| Alkalinity, bicarbonate (as caco3) | mg/L | MW-14B | 04/22/2010 | | 200.0000 | |
| Alkalinity, bicarbonate (as caco3) | mg/L | MW-14B | 10/06/2010 | | 200.0000 | |
| Alkalinity, bicarbonate (as caco3) | mg/L | MW-14B | 04/13/2011 | | 200.0000 | |
| Alkalinity, bicarbonate (as caco3) | mg/L | MW-14B | 11/01/2011 | | 210.0000 | |

* - Outlier for that well and constituent.
ND = Not detected, result = detection limit.

# Table 1

## Upgradient Data

| Constituent | Units | Well | Date | | Result | |
|---|---|---|---|---|---|---|
| Alkalinity, bicarbonate (as caco3) | mg/L | MW-14B | 05/03/2012 | | 200.0000 | |
| Alkalinity, bicarbonate (as caco3) | mg/L | MW-14B | 11/13/2012 | | 220.0000 | |
| Magnesium, dissolved | mg/L | MW-14B | 04/03/1997 | | 11.5000 | |
| Magnesium, dissolved | mg/L | MW-14B | 05/20/1997 | | 12.2000 | |
| Magnesium, dissolved | mg/L | MW-14B | 09/11/1997 | | 11.1000 | |
| Magnesium, dissolved | mg/L | MW-14B | 12/30/1997 | | 12.2000 | |
| Magnesium, dissolved | mg/L | MW-14B | 03/19/1998 | | 11.6000 | |
| Magnesium, dissolved | mg/L | MW-14B | 06/11/1998 | | 11.2000 | |
| Magnesium, dissolved | mg/L | MW-14B | 08/20/1998 | | 12.4000 | |
| Magnesium, dissolved | mg/L | MW-14B | 12/16/1998 | | 12.4000 | |
| Magnesium, dissolved | mg/L | MW-14B | 03/25/1999 | | 12.7000 | |
| Magnesium, dissolved | mg/L | MW-14B | 06/16/1999 | | 12.6000 | |
| Magnesium, dissolved | mg/L | MW-14B | 09/16/1999 | | 12.3000 | |
| Magnesium, dissolved | mg/L | MW-14B | 12/10/1999 | | 12.0000 | |
| Magnesium, dissolved | mg/L | MW-14B | 02/09/2000 | | 12.3000 | |
| Magnesium, dissolved | mg/L | MW-14B | 05/24/2000 | | 11.8000 | |
| Magnesium, dissolved | mg/L | MW-14B | 08/22/2000 | | 11.5000 | |
| Magnesium, dissolved | mg/L | MW-14B | 11/07/2000 | | 12.0000 | |
| Magnesium, dissolved | mg/L | MW-14B | 01/30/2001 | | 12.0000 | |
| Magnesium, dissolved | mg/L | MW-14B | 04/25/2001 | | 12.9000 | |
| Magnesium, dissolved | mg/L | MW-14B | 08/29/2001 | | 13.3000 | |
| Magnesium, dissolved | mg/L | MW-14B | 11/06/2001 | | 13.8000 | |
| Magnesium, dissolved | mg/L | MW-14B | 01/30/2002 | | 13.5000 | |
| Magnesium, dissolved | mg/L | MW-14B | 04/09/2002 | | 13.4000 | |
| Magnesium, dissolved | mg/L | MW-14B | 07/23/2002 | | 14.5000 | |
| Magnesium, dissolved | mg/L | MW-14B | 10/10/2002 | | 14.0000 | |
| Magnesium, dissolved | mg/L | MW-14B | 02/25/2003 | | 15.0000 | |
| Magnesium, dissolved | mg/L | MW-14B | 05/13/2003 | | 14.0000 | |
| Magnesium, dissolved | mg/L | MW-14B | 08/20/2003 | | 13.0000 | |
| Magnesium, dissolved | mg/L | MW-14B | 11/18/2003 | | 13.0000 | |
| Magnesium, dissolved | mg/L | MW-14B | 04/21/2004 | | 14.0000 | |
| Magnesium, dissolved | mg/L | MW-14B | 11/10/2004 | | 13.0000 | |
| Magnesium, dissolved | mg/L | MW-14B | 05/25/2005 | | 14.0000 | |
| Magnesium, dissolved | mg/L | MW-14B | 10/25/2005 | | 13.0000 | |
| Magnesium, dissolved | mg/L | MW-14B | 05/10/2006 | | 15.0000 | |
| Magnesium, dissolved | mg/L | MW-14B | 10/18/2006 | | 13.0000 | |
| Magnesium, dissolved | mg/L | MW-14B | 05/09/2007 | | 15.0000 | |
| Magnesium, dissolved | mg/L | MW-14B | 11/08/2007 | | 14.0000 | |
| Magnesium, dissolved | mg/L | MW-14B | 05/21/2008 | | 15.0000 | |
| Magnesium, dissolved | mg/L | MW-14B | 11/12/2008 | | 13.0000 | |
| Magnesium, dissolved | mg/L | MW-14B | 05/06/2009 | | 14.0000 | |
| Magnesium, dissolved | mg/L | MW-14B | 11/17/2009 | | 13.0000 | |
| Magnesium, dissolved | mg/L | MW-14B | 04/22/2010 | | 14.0000 | |
| Magnesium, dissolved | mg/L | MW-14B | 10/06/2010 | | 15.0000 | |

* - Outlier for that well and constituent.
ND = Not detected, result = detection limit.

# Table 1

## Upgradient Data

| Constituent | Units | Well | Date | | Result | |
|---|---|---|---|---|---|---|
| Magnesium, dissolved | mg/L | MW-14B | 04/13/2011 | | 15.0000 | |
| Magnesium, dissolved | mg/L | MW-14B | 11/01/2011 | | 14.0000 | |
| Magnesium, dissolved | mg/L | MW-14B | 05/03/2012 | | 15.0000 | |
| Magnesium, dissolved | mg/L | MW-14B | 11/13/2012 | | 15.0000 | |
| Potassium, dissolved | mg/L | MW-14B | 04/03/1997 | | 0.8300 | |
| Potassium, dissolved | mg/L | MW-14B | 05/20/1997 | | 0.5100 | |
| Potassium, dissolved | mg/L | MW-14B | 09/11/1997 | | 0.6500 | |
| Potassium, dissolved | mg/L | MW-14B | 12/30/1997 | | 0.8900 | |
| Potassium, dissolved | mg/L | MW-14B | 03/19/1998 | | 0.4800 | |
| Potassium, dissolved | mg/L | MW-14B | 06/11/1998 | | 0.5900 | |
| Potassium, dissolved | mg/L | MW-14B | 08/20/1998 | | 0.6500 | |
| Potassium, dissolved | mg/L | MW-14B | 12/16/1998 | ND | 2.0000 | * |
| Potassium, dissolved | mg/L | MW-14B | 03/25/1999 | | 0.7000 | |
| Potassium, dissolved | mg/L | MW-14B | 06/16/1999 | | 0.8500 | |
| Potassium, dissolved | mg/L | MW-14B | 09/16/1999 | | 0.5800 | |
| Potassium, dissolved | mg/L | MW-14B | 12/10/1999 | | 0.5000 | |
| Potassium, dissolved | mg/L | MW-14B | 02/09/2000 | | 0.7200 | |
| Potassium, dissolved | mg/L | MW-14B | 05/24/2000 | | 0.6000 | |
| Potassium, dissolved | mg/L | MW-14B | 08/22/2000 | | 0.6000 | |
| Potassium, dissolved | mg/L | MW-14B | 11/07/2000 | | 0.5600 | |
| Potassium, dissolved | mg/L | MW-14B | 01/30/2001 | | 0.5700 | |
| Potassium, dissolved | mg/L | MW-14B | 04/25/2001 | | 0.5500 | |
| Potassium, dissolved | mg/L | MW-14B | 08/29/2001 | | 0.7200 | |
| Potassium, dissolved | mg/L | MW-14B | 11/06/2001 | | 0.5500 | |
| Potassium, dissolved | mg/L | MW-14B | 01/30/2002 | ND | 0.5000 | |
| Potassium, dissolved | mg/L | MW-14B | 04/09/2002 | ND | 0.5000 | |
| Potassium, dissolved | mg/L | MW-14B | 07/23/2002 | | 0.8100 | |
| Potassium, dissolved | mg/L | MW-14B | 10/10/2002 | | 0.7400 | |
| Potassium, dissolved | mg/L | MW-14B | 02/25/2003 | | 0.5100 | |
| Potassium, dissolved | mg/L | MW-14B | 05/13/2003 | | 0.5200 | |
| Potassium, dissolved | mg/L | MW-14B | 08/20/2003 | | 0.6800 | |
| Potassium, dissolved | mg/L | MW-14B | 11/18/2003 | ND | 0.5000 | |
| Potassium, dissolved | mg/L | MW-14B | 04/21/2004 | ND | 0.5000 | |
| Potassium, dissolved | mg/L | MW-14B | 11/10/2004 | | 0.5100 | |
| Potassium, dissolved | mg/L | MW-14B | 05/25/2005 | ND | 0.5000 | |
| Potassium, dissolved | mg/L | MW-14B | 10/25/2005 | ND | 0.5000 | |
| Potassium, dissolved | mg/L | MW-14B | 05/10/2006 | | 0.5100 | |
| Potassium, dissolved | mg/L | MW-14B | 10/18/2006 | | 0.5700 | |
| Potassium, dissolved | mg/L | MW-14B | 05/09/2007 | ND | 0.5000 | |
| Potassium, dissolved | mg/L | MW-14B | 11/08/2007 | ND | 0.5000 | |
| Potassium, dissolved | mg/L | MW-14B | 05/21/2008 | | 0.7200 | |
| Potassium, dissolved | mg/L | MW-14B | 11/12/2008 | ND | 0.5000 | |
| Potassium, dissolved | mg/L | MW-14B | 05/06/2009 | | 0.5400 | |
| Potassium, dissolved | mg/L | MW-14B | 11/17/2009 | ND | 0.5000 | |

* - Outlier for that well and constituent.
ND = Not detected, result = detection limit.

# Table 1

## Upgradient Data

| Constituent | Units | Well | Date | | Result | |
|---|---|---|---|---|---|---|
| Potassium, dissolved | mg/L | MW-14B | 04/22/2010 | | 0.6900 | |
| Potassium, dissolved | mg/L | MW-14B | 10/06/2010 | | 0.5300 | |
| Potassium, dissolved | mg/L | MW-14B | 04/13/2011 | | 0.5500 | |
| Potassium, dissolved | mg/L | MW-14B | 11/01/2011 | ND | 0.5000 | |
| Potassium, dissolved | mg/L | MW-14B | 05/03/2012 | | 0.5900 | |
| Potassium, dissolved | mg/L | MW-14B | 11/13/2012 | | 0.5200 | |
| Sodium, dissolved | mg/L | MW-14B | 04/03/1997 | | 25.9000 | |
| Sodium, dissolved | mg/L | MW-14B | 05/20/1997 | | 23.2000 | |
| Sodium, dissolved | mg/L | MW-14B | 09/11/1997 | | 17.6000 | |
| Sodium, dissolved | mg/L | MW-14B | 12/30/1997 | | 25.7000 | |
| Sodium, dissolved | mg/L | MW-14B | 03/19/1998 | | 22.7000 | |
| Sodium, dissolved | mg/L | MW-14B | 06/11/1998 | | 18.4000 | |
| Sodium, dissolved | mg/L | MW-14B | 08/20/1998 | | 18.4000 | |
| Sodium, dissolved | mg/L | MW-14B | 12/16/1998 | | 21.6000 | |
| Sodium, dissolved | mg/L | MW-14B | 03/25/1999 | | 23.2000 | |
| Sodium, dissolved | mg/L | MW-14B | 06/16/1999 | | 18.3000 | |
| Sodium, dissolved | mg/L | MW-14B | 09/16/1999 | | 18.1000 | |
| Sodium, dissolved | mg/L | MW-14B | 12/10/1999 | | 20.7000 | |
| Sodium, dissolved | mg/L | MW-14B | 02/09/2000 | | 24.9000 | |
| Sodium, dissolved | mg/L | MW-14B | 05/24/2000 | | 19.6000 | |
| Sodium, dissolved | mg/L | MW-14B | 08/22/2000 | | 21.8000 | |
| Sodium, dissolved | mg/L | MW-14B | 11/07/2000 | | 25.4000 | |
| Sodium, dissolved | mg/L | MW-14B | 01/30/2001 | | 21.4000 | |
| Sodium, dissolved | mg/L | MW-14B | 04/25/2001 | | 20.6000 | |
| Sodium, dissolved | mg/L | MW-14B | 08/29/2001 | | 19.5000 | |
| Sodium, dissolved | mg/L | MW-14B | 11/06/2001 | | 21.9000 | |
| Sodium, dissolved | mg/L | MW-14B | 01/30/2002 | | 19.6000 | |
| Sodium, dissolved | mg/L | MW-14B | 04/09/2002 | | 18.4000 | |
| Sodium, dissolved | mg/L | MW-14B | 07/23/2002 | | 19.9000 | |
| Sodium, dissolved | mg/L | MW-14B | 10/10/2002 | | 27.0000 | |
| Sodium, dissolved | mg/L | MW-14B | 02/25/2003 | | 21.0000 | |
| Sodium, dissolved | mg/L | MW-14B | 05/13/2003 | | 18.0000 | |
| Sodium, dissolved | mg/L | MW-14B | 08/20/2003 | | 19.0000 | |
| Sodium, dissolved | mg/L | MW-14B | 11/18/2003 | | 40.0000 | |
| Sodium, dissolved | mg/L | MW-14B | 04/21/2004 | | 33.0000 | |
| Sodium, dissolved | mg/L | MW-14B | 11/10/2004 | | 41.0000 | |
| Sodium, dissolved | mg/L | MW-14B | 05/25/2005 | | 32.0000 | |
| Sodium, dissolved | mg/L | MW-14B | 10/25/2005 | | 28.0000 | |
| Sodium, dissolved | mg/L | MW-14B | 05/10/2006 | | 24.0000 | |
| Sodium, dissolved | mg/L | MW-14B | 10/18/2006 | | 35.0000 | |
| Sodium, dissolved | mg/L | MW-14B | 05/09/2007 | | 21.0000 | |
| Sodium, dissolved | mg/L | MW-14B | 11/08/2007 | | 33.0000 | |
| Sodium, dissolved | mg/L | MW-14B | 05/21/2008 | | 25.0000 | |
| Sodium, dissolved | mg/L | MW-14B | 11/12/2008 | | 41.0000 | |

* - Outlier for that well and constituent.
ND = Not detected, result = detection limit.

# Table 1

## Upgradient Data

| Constituent | Units | Well | Date | | Result | |
|---|---|---|---|---|---|---|
| Sodium, dissolved | mg/L | MW-14B | 05/06/2009 | | 40.0000 | |
| Sodium, dissolved | mg/L | MW-14B | 11/17/2009 | | 46.0000 | |
| Sodium, dissolved | mg/L | MW-14B | 04/22/2010 | | 25.0000 | |
| Sodium, dissolved | mg/L | MW-14B | 10/06/2010 | | 25.0000 | |
| Sodium, dissolved | mg/L | MW-14B | 04/13/2011 | | 31.0000 | |
| Sodium, dissolved | mg/L | MW-14B | 11/01/2011 | | 26.0000 | |
| Sodium, dissolved | mg/L | MW-14B | 05/03/2012 | | 22.0000 | |
| Sodium, dissolved | mg/L | MW-14B | 11/13/2012 | | 43.0000 | |
| Sulfate | mg/L | MW-14B | 04/03/1997 | | 9.6000 | |
| Sulfate | mg/L | MW-14B | 05/20/1997 | | 12.2000 | |
| Sulfate | mg/L | MW-14B | 09/11/1997 | | 1.9000 | |
| Sulfate | mg/L | MW-14B | 12/30/1997 | ND | 1.0000 | |
| Sulfate | mg/L | MW-14B | 03/19/1998 | | 1.4000 | |
| Sulfate | mg/L | MW-14B | 06/11/1998 | ND | 1.0000 | |
| Sulfate | mg/L | MW-14B | 08/20/1998 | ND | 1.0000 | |
| Sulfate | mg/L | MW-14B | 12/16/1998 | | 0.9000 | |
| Sulfate | mg/L | MW-14B | 03/25/1999 | | 7.1000 | |
| Sulfate | mg/L | MW-14B | 06/16/1999 | ND | 1.0000 | |
| Sulfate | mg/L | MW-14B | 09/16/1999 | | 12.9000 | |
| Sulfate | mg/L | MW-14B | 12/10/1999 | | 8.6000 | |
| Sulfate | mg/L | MW-14B | 02/09/2000 | ND | 1.0000 | |
| Sulfate | mg/L | MW-14B | 05/24/2000 | ND | 1.0000 | |
| Sulfate | mg/L | MW-14B | 08/22/2000 | | 1.7000 | |
| Sulfate | mg/L | MW-14B | 11/07/2000 | | 2.4000 | |
| Sulfate | mg/L | MW-14B | 01/30/2001 | | 7.8000 | |
| Sulfate | mg/L | MW-14B | 04/25/2001 | | 1.5000 | |
| Sulfate | mg/L | MW-14B | 08/29/2001 | | 1.2000 | |
| Sulfate | mg/L | MW-14B | 11/06/2001 | | 1.0000 | |
| Sulfate | mg/L | MW-14B | 01/30/2002 | | 1.0000 | |
| Sulfate | mg/L | MW-14B | 04/09/2002 | | 1.7000 | |
| Sulfate | mg/L | MW-14B | 07/23/2002 | | 1.4000 | |
| Sulfate | mg/L | MW-14B | 10/10/2002 | | 2.6000 | |
| Sulfate | mg/L | MW-14B | 02/25/2003 | | 1.6000 | |
| Sulfate | mg/L | MW-14B | 05/13/2003 | | 1.7000 | |
| Sulfate | mg/L | MW-14B | 08/20/2003 | | 2.1000 | |
| Sulfate | mg/L | MW-14B | 11/18/2003 | | 5.1000 | |
| Sulfate | mg/L | MW-14B | 04/21/2004 | | 4.0000 | |
| Sulfate | mg/L | MW-14B | 11/10/2004 | | 4.1000 | |
| Sulfate | mg/L | MW-14B | 05/25/2005 | | 2.6000 | |
| Sulfate | mg/L | MW-14B | 10/25/2005 | | 3.0000 | |
| Sulfate | mg/L | MW-14B | 05/10/2006 | ND | 1.0000 | |
| Sulfate | mg/L | MW-14B | 10/18/2006 | | 4.2000 | |
| Sulfate | mg/L | MW-14B | 05/09/2007 | | 1.0000 | |
| Sulfate | mg/L | MW-14B | 11/08/2007 | | 2.8000 | |

* - Outlier for that well and constituent.
ND = Not detected, result = detection limit.

# Table 1

## Upgradient Data

| Constituent | Units | Well | Date | | Result | |
|---|---|---|---|---|---|---|
| Sulfate | mg/L | MW-14B | 05/21/2008 | | 1.4000 | |
| Sulfate | mg/L | MW-14B | 11/12/2008 | | 4.2000 | |
| Sulfate | mg/L | MW-14B | 05/06/2009 | | 4.1000 | |
| Sulfate | mg/L | MW-14B | 11/17/2009 | | 4.3000 | |
| Sulfate | mg/L | MW-14B | 04/22/2010 | | 2.1000 | |
| Sulfate | mg/L | MW-14B | 10/06/2010 | | 2.4000 | |
| Sulfate | mg/L | MW-14B | 04/13/2011 | | 2.6000 | |
| Sulfate | mg/L | MW-14B | 11/01/2011 | | 2.3000 | |
| Sulfate | mg/L | MW-14B | 05/03/2012 | ND | 1.0000 | |
| Sulfate | mg/L | MW-14B | 11/13/2012 | | 4.4000 | |
| Total dissolved solids (tds) | mg/L | MW-14B | 04/03/1997 | | 24.0000 | * |
| Total dissolved solids (tds) | mg/L | MW-14B | 05/20/1997 | | 195.0000 | |
| Total dissolved solids (tds) | mg/L | MW-14B | 09/11/1997 | | 259.0000 | |
| Total dissolved solids (tds) | mg/L | MW-14B | 12/30/1997 | | 208.0000 | |
| Total dissolved solids (tds) | mg/L | MW-14B | 03/19/1998 | | 221.0000 | |
| Total dissolved solids (tds) | mg/L | MW-14B | 06/11/1998 | | 228.0000 | |
| Total dissolved solids (tds) | mg/L | MW-14B | 08/20/1998 | | 195.0000 | |
| Total dissolved solids (tds) | mg/L | MW-14B | 12/16/1998 | | 202.0000 | |
| Total dissolved solids (tds) | mg/L | MW-14B | 03/25/1999 | | 200.0000 | |
| Total dissolved solids (tds) | mg/L | MW-14B | 06/16/1999 | | 226.0000 | |
| Total dissolved solids (tds) | mg/L | MW-14B | 09/16/1999 | | 223.0000 | |
| Total dissolved solids (tds) | mg/L | MW-14B | 12/10/1999 | | 231.0000 | |
| Total dissolved solids (tds) | mg/L | MW-14B | 02/09/2000 | | 248.0000 | |
| Total dissolved solids (tds) | mg/L | MW-14B | 05/24/2000 | | 200.0000 | |
| Total dissolved solids (tds) | mg/L | MW-14B | 08/22/2000 | | 241.0000 | |
| Total dissolved solids (tds) | mg/L | MW-14B | 11/07/2000 | | 235.0000 | |
| Total dissolved solids (tds) | mg/L | MW-14B | 01/30/2001 | | 169.0000 | |
| Total dissolved solids (tds) | mg/L | MW-14B | 04/25/2001 | | 246.0000 | |
| Total dissolved solids (tds) | mg/L | MW-14B | 08/29/2001 | | 193.0000 | |
| Total dissolved solids (tds) | mg/L | MW-14B | 11/06/2001 | | 205.0000 | |
| Total dissolved solids (tds) | mg/L | MW-14B | 01/30/2002 | | 186.0000 | |
| Total dissolved solids (tds) | mg/L | MW-14B | 04/09/2002 | | 303.0000 | |
| Total dissolved solids (tds) | mg/L | MW-14B | 07/23/2002 | | 163.0000 | |
| Total dissolved solids (tds) | mg/L | MW-14B | 10/10/2002 | | 240.0000 | |
| Total dissolved solids (tds) | mg/L | MW-14B | 02/25/2003 | | 190.0000 | |
| Total dissolved solids (tds) | mg/L | MW-14B | 05/13/2003 | | 240.0000 | |
| Total dissolved solids (tds) | mg/L | MW-14B | 08/20/2003 | | 240.0000 | |
| Total dissolved solids (tds) | mg/L | MW-14B | 11/18/2003 | | 280.0000 | |
| Total dissolved solids (tds) | mg/L | MW-14B | 04/21/2004 | | 260.0000 | |
| Total dissolved solids (tds) | mg/L | MW-14B | 11/10/2004 | | 280.0000 | |
| Total dissolved solids (tds) | mg/L | MW-14B | 05/25/2005 | | 250.0000 | |
| Total dissolved solids (tds) | mg/L | MW-14B | 10/25/2005 | | 250.0000 | |
| Total dissolved solids (tds) | mg/L | MW-14B | 05/10/2006 | | 270.0000 | |
| Total dissolved solids (tds) | mg/L | MW-14B | 10/18/2006 | | 280.0000 | |

* - Outlier for that well and constituent.
ND = Not detected, result = detection limit.

# Table 1

## Upgradient Data

| Constituent | Units | Well | Date | | Result | |
|---|---|---|---|---|---|---|
| Total dissolved solids (tds) | mg/L | MW-14B | 05/09/2007 | | 270.0000 | |
| Total dissolved solids (tds) | mg/L | MW-14B | 11/08/2007 | | 260.0000 | |
| Total dissolved solids (tds) | mg/L | MW-14B | 05/21/2008 | | 270.0000 | |
| Total dissolved solids (tds) | mg/L | MW-14B | 11/12/2008 | | 300.0000 | |
| Total dissolved solids (tds) | mg/L | MW-14B | 05/06/2009 | | 280.0000 | |
| Total dissolved solids (tds) | mg/L | MW-14B | 11/17/2009 | | 280.0000 | |
| Total dissolved solids (tds) | mg/L | MW-14B | 04/22/2010 | | 260.0000 | |
| Total dissolved solids (tds) | mg/L | MW-14B | 10/06/2010 | | 270.0000 | |
| Total dissolved solids (tds) | mg/L | MW-14B | 04/13/2011 | | 260.0000 | |
| Total dissolved solids (tds) | mg/L | MW-14B | 11/01/2011 | | 270.0000 | |
| Total dissolved solids (tds) | mg/L | MW-14B | 05/03/2012 | | 260.0000 | |
| Total dissolved solids (tds) | mg/L | MW-14B | 11/13/2012 | | 300.0000 | |
| Total organic carbon (toc) | mg/L | MW-14B | 04/03/1997 | | 2.6000 | |
| Total organic carbon (toc) | mg/L | MW-14B | 05/20/1997 | | 1.6000 | |
| Total organic carbon (toc) | mg/L | MW-14B | 09/11/1997 | | 1.3000 | |
| Total organic carbon (toc) | mg/L | MW-14B | 12/30/1997 | | 44.0000 | * |
| Total organic carbon (toc) | mg/L | MW-14B | 03/19/1998 | | 1.9000 | |
| Total organic carbon (toc) | mg/L | MW-14B | 06/11/1998 | | 1.7000 | |
| Total organic carbon (toc) | mg/L | MW-14B | 08/20/1998 | | 1.7000 | |
| Total organic carbon (toc) | mg/L | MW-14B | 03/25/1999 | | 1.9000 | |
| Total organic carbon (toc) | mg/L | MW-14B | 06/16/1999 | | 49.3000 | * |
| Total organic carbon (toc) | mg/L | MW-14B | 09/16/1999 | | 1.6000 | |
| Total organic carbon (toc) | mg/L | MW-14B | 12/10/1999 | | 1.9000 | |
| Total organic carbon (toc) | mg/L | MW-14B | 02/09/2000 | | 1.5000 | |
| Total organic carbon (toc) | mg/L | MW-14B | 05/24/2000 | | 1.2000 | |
| Total organic carbon (toc) | mg/L | MW-14B | 08/22/2000 | | 1.7000 | |
| Total organic carbon (toc) | mg/L | MW-14B | 11/07/2000 | | 1.2000 | |
| Total organic carbon (toc) | mg/L | MW-14B | 01/30/2001 | | 2.2000 | |
| Total organic carbon (toc) | mg/L | MW-14B | 04/25/2001 | | 2.1000 | |
| Total organic carbon (toc) | mg/L | MW-14B | 08/29/2001 | ND | 1.0000 | |
| Total organic carbon (toc) | mg/L | MW-14B | 11/06/2001 | | 2.5000 | |
| Total organic carbon (toc) | mg/L | MW-14B | 01/30/2002 | | 2.3000 | |
| Total organic carbon (toc) | mg/L | MW-14B | 04/09/2002 | | 1.8000 | |
| Total organic carbon (toc) | mg/L | MW-14B | 07/23/2002 | | 2.3000 | |
| Total organic carbon (toc) | mg/L | MW-14B | 10/10/2002 | | 1.6250 | |
| Total organic carbon (toc) | mg/L | MW-14B | 02/25/2003 | | 1.8000 | |
| Total organic carbon (toc) | mg/L | MW-14B | 05/13/2003 | | 1.7000 | |
| Total organic carbon (toc) | mg/L | MW-14B | 08/20/2003 | | 1.7000 | |
| Total organic carbon (toc) | mg/L | MW-14B | 11/18/2003 | ND | 1.0000 | |
| Total organic carbon (toc) | mg/L | MW-14B | 04/21/2004 | | 1.5000 | |
| Total organic carbon (toc) | mg/L | MW-14B | 11/10/2004 | | 1.3000 | |
| Total organic carbon (toc) | mg/L | MW-14B | 05/25/2005 | | 1.5000 | |
| Total organic carbon (toc) | mg/L | MW-14B | 10/25/2005 | ND | 1.0000 | |
| Total organic carbon (toc) | mg/L | MW-14B | 05/10/2006 | | 2.4000 | |

* - Outlier for that well and constituent.
ND = Not detected, result = detection limit.

# Table 1

## Upgradient Data

| Constituent | Units | Well | Date | | Result | |
|---|---|---|---|---|---|---|
| Total organic carbon (toc) | mg/L | MW-14B | 10/18/2006 | ND | 1.0000 | |
| Total organic carbon (toc) | mg/L | MW-14B | 05/09/2007 | | 1.9000 | |
| Total organic carbon (toc) | mg/L | MW-14B | 11/08/2007 | ND | 1.0000 | |
| Total organic carbon (toc) | mg/L | MW-14B | 05/21/2008 | | 1.2000 | |
| Total organic carbon (toc) | mg/L | MW-14B | 11/12/2008 | | 1.1000 | |
| Total organic carbon (toc) | mg/L | MW-14B | 05/06/2009 | | 1.1000 | |
| Total organic carbon (toc) | mg/L | MW-14B | 11/17/2009 | ND | 1.0000 | |
| Total organic carbon (toc) | mg/L | MW-14B | 04/22/2010 | | 1.5000 | |
| Total organic carbon (toc) | mg/L | MW-14B | 10/06/2010 | | 1.5000 | |
| Total organic carbon (toc) | mg/L | MW-14B | 04/13/2011 | | 2.0000 | |
| Total organic carbon (toc) | mg/L | MW-14B | 11/01/2011 | | 1.7000 | |
| Total organic carbon (toc) | mg/L | MW-14B | 05/03/2012 | | 2.0000 | |
| Total organic carbon (toc) | mg/L | MW-14B | 11/13/2012 | | 1.6000 | |

* - Outlier for that well and constituent.
ND = Not detected, result = detection limit.

# Table 2

## Shapiro Wilk Test of Normality for Multiple Groups

| Constituent | N (Detects) | Detect Freq | G raw | G log | Critical Value | Limit Type |
|---|---|---|---|---|---|---|
| Alkalinity, bicarbonate (as caco3) | 45 | 1.000 | 1.156 | 0.923 | 2.326 | normal |
| Magnesium, dissolved | 46 | 1.000 | 2.290 | 2.149 | 2.326 | normal |
| Potassium, dissolved | 34 | 0.756 | 2.685 | 2.443 | 2.326 | nonpar |
| Sodium, dissolved | 46 | 1.000 | 4.293 | 3.249 | 2.326 | nonpar |
| Sulfate | 38 | 0.826 | 4.797 | 2.285 | 2.326 | lognor |
| Total dissolved solids (tds) | 45 | 1.000 | 1.168 | 1.826 | 2.326 | normal |
| Total organic carbon (toc) | 37 | 0.860 | 0.716 | 0.300 | 2.326 | normal |

Fit to distribution is confirmed if G < critical value.
If detection frequency is < 50% nonparametric or Poisson limit is used

# Table 3

## Summary Statistics and Prediction Limits

| Constituent | Units | Model Type | N | Detect | Mean | SD | Pred Limit | Conf* |
|---|---|---|---|---|---|---|---|---|
| Alkalinity, bicarbonate (as caco3) | mg/L | normal | 45 | 45 | 187.7556 | 17.3849 | 230.1874 | |
| Magnesium, dissolved | mg/L | normal | 46 | 46 | 13.2217 | 1.1749 | 16.0863 | |
| Potassium, dissolved | mg/L | nonpar | 45 | 34 | | | 0.8500 | 0.99 |
| Sodium, dissolved | mg/L | nonpar | 46 | 46 | | | 43.0000 | 0.99 |
| Sulfate | mg/L | lognor | 46 | 38 | 1.1293 | 0.7183 | 16.8261 | |
| Total dissolved solids (tds) | mg/L | normal | 45 | 45 | 240.8222 | 35.9718 | 328.6196 | |
| Total organic carbon (toc) | mg/L | normal | 43 | 37 | 1.4913 | 0.7062 | 3.2188 | |

* - Confidence level for passing initial test or one verification resample at all downgradient wells for a single constituent (nonparametric test only).
Model Type refers to type of prediction limit.
For lognormal limit, mean and sd in natural log units and prediction limit in original units.
All sample sizes and statistics are based on outlier free data.
For nonparametric limits, median reporting limits are substituted for extreme reporting limit values.

## Worksheet 1

## Alkalinity, bicarbonate (as caco3) (mg/L)

## Normal Prediction Limit

| Step | Equation | Description |
|---|---|---|
| 1 | $\overline{X}$ = **sum[X]** / **N**<br>= **8449.0** / **45**<br>= **187.756** | Compute upgradient mean. |
| 2 | S = ( (**sum[X$^2$]** - **sum[X]**$^2$/**N**) / (**N**-1) )$^{½}$<br>= ( (**1.60**x**10$^6$** - **7.14**x**10$^7$**/**45**) / (**45**-1) )$^{½}$<br>= **17.385** | Compute upgradient sd. |
| 3 | alpha = min[ (1-.95$^{1/K}$)$^{½}$ or .01 ]<br>= min[ (1-.95$^{1/7}$)$^{½}$ or .01 ]<br>= **0.01** | Adjusted per comparison false positive rate. Pass initial or 1 resample. |
| 4 | PL = $\overline{\mathbf{X}}$ + **tS**(1+1/**N**)$^{½}$<br>= **187.756** + (**2.414***17.385)(1+1/**45**)$^{½}$<br>= **230.187** | One-sided normal prediction limit (t is Student's t on N-1 degrees of freedom and 1-alpha confidence level). |

## Worksheet 2

## Magnesium, dissolved (mg/L)

## Normal Prediction Limit

| Step | Equation | Description |
|---|---|---|
| 1 | $\overline{X}$ = **sum[X]** / **N**<br>= **608.2** / **46**<br>= **13.222** | Compute upgradient mean. |
| 2 | S = ( (**sum[X$^2$]** - **sum[X]**$^2$/**N**) / (**N**-1) )$^{½}$<br>= ( (**8103.58** - **369907.24**/**46**) / (**46**-1) )$^{½}$<br>= **1.175** | Compute upgradient sd. |
| 3 | alpha = min[ (1-.95$^{1/K}$)$^{½}$ or .01 ]<br>= min[ (1-.95$^{1/7}$)$^{½}$ or .01 ]<br>= **0.01** | Adjusted per comparison false positive rate. Pass initial or 1 resample. |
| 4 | PL = $\overline{X}$ + **tS**(1+1/**N**)$^{½}$<br>= **13.222** + (**2.412*****1.175**)(1+1/**46**)$^{½}$<br>= **16.086** | One-sided normal prediction limit (t is Student's t on N-1 degrees of freedom and 1-alpha confidence level). |

## Worksheet 3

## Potassium, dissolved (mg/L)

## Nonparametric Prediction Limit

| Step | Equation | Description |
|---|---|---|
| 1 | PL = 2nd max(X)<br>= **0.85** | Compute nonparametric prediction limit as 2nd largest background det value. |
| 2 | Confidence = **0.99** | Confidence level is based on N, K and resampling strategy (see Gibbons 1994). |

## Worksheet 4

## Sodium, dissolved (mg/L)

## Nonparametric Prediction Limit

| Step | Equation | Description |
|---|---|---|
| 1 | PL = 2nd max(X)<br>= **43.0** | Compute nonparametric prediction limit as 2nd largest background det value. |
| 2 | Confidence = **0.99** | Confidence level is based on N, K and resampling strategy (see Gibbons 1994). |

## Worksheet 5

## Sulfate (mg/L)

## Lognormal Prediction Limit

| Step | Equation | Description |
|---|---|---|
| 1 | $Y = \log_e(X+1)$ | Transform to natural logarithmic scale. |
| 2 | $\overline{Y}_1 = \mathbf{sum[Y_1]} / \mathbf{N_1}$<br>$= \mathbf{51.95} / \mathbf{38}$<br>$= \mathbf{1.367}$ | Compute mean of $N_1$ detected log transformed measurements. |
| 3 | $S_{Y_1} = ( (\mathbf{sum[Y_1^2]} - \mathbf{sum[Y_1]}^2/\mathbf{N_1}) / (\mathbf{N_1}-1) )^{½}$<br>$= ( (\mathbf{81.837} - \mathbf{2698.779}/\mathbf{38}) / (\mathbf{38}-1) )^{½}$<br>$= \mathbf{0.541}$ | Compute sd of $N_1$ detected log transformed measurements. |
| 4 | $\overline{Y} = (1 - \mathbf{N_0}/\mathbf{N})\ \overline{\mathbf{Y}}_\mathbf{1}$<br>$= (1 - \mathbf{8}/\mathbf{46})\ \mathbf{1.367}$<br>$= \mathbf{1.129}$ | Compute adjusted mean (log scale). |
| 5 | $S_Y = [ (1 - \mathbf{N_0}/\mathbf{N}) * \mathbf{S_{Y_1}}^2 + (\mathbf{N_0}/\mathbf{N}) ( 1 - (\mathbf{N_0}-1)/(\mathbf{N}-1) ) \overline{\mathbf{Y}}_\mathbf{1}^{\,2} ]^{½}$<br>$= [ (1 - \mathbf{8}/\mathbf{46}) * \mathbf{0.541}^2 + (\mathbf{8}/\mathbf{46}) ( 1 - (\mathbf{8}-1)/(\mathbf{46}-1) ) \mathbf{1.367}^2 ]^{½}$<br>$= \mathbf{0.718}$ | Compute adjusted sd (log scale). |
| 6 | $\text{alpha} = \min[ (1-.95^{1/\mathbf{K}})^{½} \text{ or } .01 ]$<br>$= \min[ (1-.95^{1/\mathbf{7}})^{½} \text{ or } .01 ]$<br>$= \mathbf{0.01}$ | Adjusted per comparison false positive rate. Pass initial or 1 resample. |
| 7 | $PL = \exp[\overline{\mathbf{Y}} + \mathbf{tS_Y}(1+1/\mathbf{N})^{½}]-1$<br>$= \exp[\mathbf{1.129} + (\mathbf{2.412}*\mathbf{0.718})(1+1/\mathbf{46})^{½}]-1$<br>$= \mathbf{16.826}$ | One-sided lognormal prediction limit (t is Student's t on N-1 degrees of freedom and 1-alpha confidence level). |

## Worksheet 6

## Total dissolved solids (tds) (mg/L)

## Normal Prediction Limit

| Step | Equation | Description |
|---|---|---|
| 1 | $\overline{X}$ = **sum[X] / N**<br>= **10837.0 / 45**<br>= **240.822** | Compute upgradient mean. |
| 2 | S = ( (**sum[X$^2$] - sum[X]$^2$/N**) / (**N**-1) )$^{½}$<br>= ( (**2.67**x**10$^6$ - 1.17**x**10$^8$/45**) / (**45**-1) )$^{½}$<br>= **35.972** | Compute upgradient sd. |
| 3 | alpha = min[ (1-.95$^{1/K}$)$^{½}$ or .01 ]<br>= min[ (1-.95$^{1/7}$)$^{½}$ or .01 ]<br>= **0.01** | Adjusted per comparison false positive rate. Pass initial or 1 resample. |
| 4 | PL = $\overline{\mathbf{X}}$ + **tS**(1+1/**N**)$^{½}$<br>= **240.822** + (**2.414***35.972)(1+1/**45**)$^{½}$<br>= **328.62** | One-sided normal prediction limit (t is Student's t on N-1 degrees of freedom and 1-alpha confidence level). |

## Worksheet 7

## Total organic carbon (toc) (mg/L)

## Normal Prediction Limit

| Step | Equation | Description |
|---|---|---|
| 1 | $\overline{X}_1 = \mathbf{sum[X_1]} / \mathbf{N_1}$<br>$= \mathbf{64.125} / \mathbf{37}$<br>$= \mathbf{1.733}$ | Compute mean of $N_1$ detected measurements. |
| 2 | $S_1 = ( (\mathbf{sum[X_1^2]} - \mathbf{sum[X_1]}^2/\mathbf{N_1}) / (\mathbf{N_1}-1) )^{½}$<br>$= ( (\mathbf{116.551} - \mathbf{4112.016}/\mathbf{37}) / (\mathbf{37}-1) )^{½}$<br>$= \mathbf{0.388}$ | Compute sd of $N_1$ detected measurements. |
| 3 | $\overline{X} = (1 - \mathbf{N_0}/\mathbf{N}) \overline{\mathbf{X}}_\mathbf{1}$<br>$= (1 - \mathbf{6}/\mathbf{43}) \mathbf{1.733}$<br>$= \mathbf{1.491}$ | Compute adjusted mean. |
| 4 | $S = [ (1 - \mathbf{N_0}/\mathbf{N}) * \mathbf{S_1}^2 + (\mathbf{N_0}/\mathbf{N}) ( 1 - (\mathbf{N_0}-1)/(\mathbf{N}-1) ) \overline{\mathbf{X}}_\mathbf{1}^2 ]^{½}$<br>$= [ (1 - \mathbf{6}/\mathbf{43}) * \mathbf{0.388}^2 + (\mathbf{6}/\mathbf{43}) ( 1 - (\mathbf{6}-1)/(\mathbf{43}-1) ) \mathbf{1.733}^2 ]^{½}$<br>$= \mathbf{0.706}$ | Compute adjusted sd. |
| 5 | $\text{alpha} = \min[ (1-.95^{1/\mathbf{K}})^{½} \text{ or } .01 ]$<br>$= \min[ (1-.95^{1/\mathbf{7}})^{½} \text{ or } .01 ]$<br>$= \mathbf{0.01}$ | Adjusted per comparison false positive rate. Pass initial or 1 resample. |
| 6 | $PL = \overline{\mathbf{X}} + \mathbf{tS}(1+1/\mathbf{N})^{½}$<br>$= \mathbf{1.491} + (\mathbf{2.418}*\mathbf{0.706})(1+1/\mathbf{43})^{½}$<br>$= \mathbf{3.219}$ | One-sided normal prediction limit (t is Student's t on N-1 degrees of freedom and 1-alpha confidence level). |

**MW-15B**

# Table 1

## Upgradient Data

| Constituent | Units | Well | Date | | Result | |
|---|---|---|---|---|---|---|
| Alkalinity, bicarbonate (as caco3) | mg/L | MW-15B | 04/04/1997 | | 353.0000 | |
| Alkalinity, bicarbonate (as caco3) | mg/L | MW-15B | 05/19/1997 | | 335.0000 | |
| Alkalinity, bicarbonate (as caco3) | mg/L | MW-15B | 09/11/1997 | | 335.0000 | |
| Alkalinity, bicarbonate (as caco3) | mg/L | MW-15B | 12/19/1997 | | 336.0000 | |
| Alkalinity, bicarbonate (as caco3) | mg/L | MW-15B | 03/18/1998 | | 314.0000 | |
| Alkalinity, bicarbonate (as caco3) | mg/L | MW-15B | 06/11/1998 | | 346.0000 | |
| Alkalinity, bicarbonate (as caco3) | mg/L | MW-15B | 08/20/1998 | | 346.0000 | |
| Alkalinity, bicarbonate (as caco3) | mg/L | MW-15B | 12/17/1998 | | 326.0000 | |
| Alkalinity, bicarbonate (as caco3) | mg/L | MW-15B | 03/26/1999 | | 305.0000 | |
| Alkalinity, bicarbonate (as caco3) | mg/L | MW-15B | 06/18/1999 | | 312.0000 | |
| Alkalinity, bicarbonate (as caco3) | mg/L | MW-15B | 12/13/1999 | | 324.0000 | |
| Alkalinity, bicarbonate (as caco3) | mg/L | MW-15B | 02/08/2000 | | 279.0000 | |
| Alkalinity, bicarbonate (as caco3) | mg/L | MW-15B | 05/24/2000 | | 307.0000 | |
| Alkalinity, bicarbonate (as caco3) | mg/L | MW-15B | 08/22/2000 | | 335.0000 | |
| Alkalinity, bicarbonate (as caco3) | mg/L | MW-15B | 11/08/2000 | | 343.0000 | |
| Alkalinity, bicarbonate (as caco3) | mg/L | MW-15B | 01/30/2001 | | 352.0000 | |
| Alkalinity, bicarbonate (as caco3) | mg/L | MW-15B | 04/24/2001 | | 348.0000 | |
| Alkalinity, bicarbonate (as caco3) | mg/L | MW-15B | 08/28/2001 | | 346.0000 | |
| Alkalinity, bicarbonate (as caco3) | mg/L | MW-15B | 11/06/2001 | | 362.0000 | |
| Alkalinity, bicarbonate (as caco3) | mg/L | MW-15B | 01/31/2002 | | 278.0000 | |
| Alkalinity, bicarbonate (as caco3) | mg/L | MW-15B | 04/09/2002 | | 328.0000 | |
| Alkalinity, bicarbonate (as caco3) | mg/L | MW-15B | 07/23/2002 | | 318.0000 | |
| Alkalinity, bicarbonate (as caco3) | mg/L | MW-15B | 10/10/2002 | | 330.0000 | |
| Alkalinity, bicarbonate (as caco3) | mg/L | MW-15B | 02/25/2003 | | 280.0000 | |
| Alkalinity, bicarbonate (as caco3) | mg/L | MW-15B | 05/13/2003 | | 310.0000 | |
| Alkalinity, bicarbonate (as caco3) | mg/L | MW-15B | 08/20/2003 | | 320.0000 | |
| Alkalinity, bicarbonate (as caco3) | mg/L | MW-15B | 11/18/2003 | | 350.0000 | |
| Alkalinity, bicarbonate (as caco3) | mg/L | MW-15B | 04/20/2004 | | 320.0000 | |
| Alkalinity, bicarbonate (as caco3) | mg/L | MW-15B | 11/09/2004 | | 330.0000 | |
| Alkalinity, bicarbonate (as caco3) | mg/L | MW-15B | 05/24/2005 | | 330.0000 | |
| Alkalinity, bicarbonate (as caco3) | mg/L | MW-15B | 10/25/2005 | | 320.0000 | |
| Alkalinity, bicarbonate (as caco3) | mg/L | MW-15B | 05/09/2006 | | 300.0000 | |
| Alkalinity, bicarbonate (as caco3) | mg/L | MW-15B | 10/17/2006 | | 330.0000 | |
| Alkalinity, bicarbonate (as caco3) | mg/L | MW-15B | 05/08/2007 | | 320.0000 | |
| Alkalinity, bicarbonate (as caco3) | mg/L | MW-15B | 11/07/2007 | | 330.0000 | |
| Alkalinity, bicarbonate (as caco3) | mg/L | MW-15B | 05/20/2008 | | 310.0000 | |
| Alkalinity, bicarbonate (as caco3) | mg/L | MW-15B | 11/11/2008 | | 320.0000 | |
| Alkalinity, bicarbonate (as caco3) | mg/L | MW-15B | 05/05/2009 | | 320.0000 | |
| Alkalinity, bicarbonate (as caco3) | mg/L | MW-15B | 11/17/2009 | | 320.0000 | |
| Alkalinity, bicarbonate (as caco3) | mg/L | MW-15B | 04/20/2010 | | 300.0000 | |
| Alkalinity, bicarbonate (as caco3) | mg/L | MW-15B | 10/05/2010 | | 350.0000 | |
| Alkalinity, bicarbonate (as caco3) | mg/L | MW-15B | 04/14/2011 | | 320.0000 | |
| Alkalinity, bicarbonate (as caco3) | mg/L | MW-15B | 11/02/2011 | | 340.0000 | |
| Alkalinity, bicarbonate (as caco3) | mg/L | MW-15B | 05/02/2012 | | 310.0000 | |

* - Outlier for that well and constituent.
ND = Not detected, result = detection limit.

# Table 1

## Upgradient Data

| Constituent | Units | Well | Date | | Result | |
|---|---|---|---|---|---|---|
| Alkalinity, bicarbonate (as caco3) | mg/L | MW-15B | 11/13/2012 | | 330.0000 | |
| Magnesium, dissolved | mg/L | MW-15B | 04/04/1997 | | 33.5000 | |
| Magnesium, dissolved | mg/L | MW-15B | 05/19/1997 | | 33.3000 | |
| Magnesium, dissolved | mg/L | MW-15B | 09/11/1997 | | 33.3000 | |
| Magnesium, dissolved | mg/L | MW-15B | 12/19/1997 | | 32.6000 | |
| Magnesium, dissolved | mg/L | MW-15B | 03/18/1998 | | 29.1000 | |
| Magnesium, dissolved | mg/L | MW-15B | 06/11/1998 | | 31.0000 | |
| Magnesium, dissolved | mg/L | MW-15B | 08/20/1998 | | 34.0000 | |
| Magnesium, dissolved | mg/L | MW-15B | 12/17/1998 | | 32.3000 | |
| Magnesium, dissolved | mg/L | MW-15B | 03/26/1999 | | 29.9000 | |
| Magnesium, dissolved | mg/L | MW-15B | 06/18/1999 | | 30.7000 | |
| Magnesium, dissolved | mg/L | MW-15B | 09/15/1999 | | 33.5000 | |
| Magnesium, dissolved | mg/L | MW-15B | 12/13/1999 | | 30.4000 | |
| Magnesium, dissolved | mg/L | MW-15B | 02/08/2000 | | 25.2000 | |
| Magnesium, dissolved | mg/L | MW-15B | 05/24/2000 | | 32.0000 | |
| Magnesium, dissolved | mg/L | MW-15B | 08/22/2000 | | 30.6000 | |
| Magnesium, dissolved | mg/L | MW-15B | 11/08/2000 | | 31.3000 | |
| Magnesium, dissolved | mg/L | MW-15B | 01/30/2001 | | 31.6000 | |
| Magnesium, dissolved | mg/L | MW-15B | 04/24/2001 | | 33.0000 | |
| Magnesium, dissolved | mg/L | MW-15B | 08/28/2001 | | 31.6000 | |
| Magnesium, dissolved | mg/L | MW-15B | 11/06/2001 | | 35.3000 | |
| Magnesium, dissolved | mg/L | MW-15B | 01/31/2002 | | 26.2000 | |
| Magnesium, dissolved | mg/L | MW-15B | 04/09/2002 | | 30.0000 | |
| Magnesium, dissolved | mg/L | MW-15B | 07/23/2002 | | 32.9000 | |
| Magnesium, dissolved | mg/L | MW-15B | 10/10/2002 | | 32.0000 | |
| Magnesium, dissolved | mg/L | MW-15B | 02/25/2003 | | 29.0000 | |
| Magnesium, dissolved | mg/L | MW-15B | 05/13/2003 | | 32.0000 | |
| Magnesium, dissolved | mg/L | MW-15B | 08/20/2003 | | 33.0000 | |
| Magnesium, dissolved | mg/L | MW-15B | 11/18/2003 | | 32.0000 | |
| Magnesium, dissolved | mg/L | MW-15B | 04/20/2004 | | 31.0000 | |
| Magnesium, dissolved | mg/L | MW-15B | 11/09/2004 | | 33.0000 | |
| Magnesium, dissolved | mg/L | MW-15B | 06/06/2005 | | 32.0000 | |
| Magnesium, dissolved | mg/L | MW-15B | 10/25/2005 | | 33.0000 | |
| Magnesium, dissolved | mg/L | MW-15B | 05/09/2006 | | 28.0000 | |
| Magnesium, dissolved | mg/L | MW-15B | 10/17/2006 | | 30.0000 | |
| Magnesium, dissolved | mg/L | MW-15B | 05/08/2007 | | 30.0000 | |
| Magnesium, dissolved | mg/L | MW-15B | 11/07/2007 | | 31.0000 | |
| Magnesium, dissolved | mg/L | MW-15B | 05/20/2008 | | 30.0000 | |
| Magnesium, dissolved | mg/L | MW-15B | 11/11/2008 | | 29.0000 | |
| Magnesium, dissolved | mg/L | MW-15B | 05/05/2009 | | 29.0000 | |
| Magnesium, dissolved | mg/L | MW-15B | 11/17/2009 | | 27.0000 | |
| Magnesium, dissolved | mg/L | MW-15B | 04/20/2010 | | 29.0000 | |
| Magnesium, dissolved | mg/L | MW-15B | 10/05/2010 | | 31.0000 | |
| Magnesium, dissolved | mg/L | MW-15B | 04/14/2011 | | 27.0000 | |

* - Outlier for that well and constituent.
ND = Not detected, result = detection limit.

# Table 1

## Upgradient Data

| Constituent | Units | Well | Date | | Result | |
|---|---|---|---|---|---|---|
| Magnesium, dissolved | mg/L | MW-15B | 11/02/2011 | | 27.0000 | |
| Magnesium, dissolved | mg/L | MW-15B | 05/02/2012 | | 28.0000 | |
| Magnesium, dissolved | mg/L | MW-15B | 11/13/2012 | | 32.0000 | |
| Potassium, dissolved | mg/L | MW-15B | 04/04/1997 | | 0.6800 | |
| Potassium, dissolved | mg/L | MW-15B | 05/19/1997 | | 0.3000 | |
| Potassium, dissolved | mg/L | MW-15B | 09/11/1997 | ND | 0.1500 | |
| Potassium, dissolved | mg/L | MW-15B | 12/19/1997 | | 0.5500 | |
| Potassium, dissolved | mg/L | MW-15B | 03/18/1998 | | 0.2700 | |
| Potassium, dissolved | mg/L | MW-15B | 06/11/1998 | | 0.3500 | |
| Potassium, dissolved | mg/L | MW-15B | 08/20/1998 | | 0.4100 | |
| Potassium, dissolved | mg/L | MW-15B | 12/17/1998 | ND | 2.0000 | * |
| Potassium, dissolved | mg/L | MW-15B | 03/26/1999 | | 0.3700 | |
| Potassium, dissolved | mg/L | MW-15B | 06/18/1999 | | 0.2500 | |
| Potassium, dissolved | mg/L | MW-15B | 09/15/1999 | | 0.3200 | |
| Potassium, dissolved | mg/L | MW-15B | 12/13/1999 | | 0.5000 | |
| Potassium, dissolved | mg/L | MW-15B | 02/08/2000 | ND | 0.2500 | |
| Potassium, dissolved | mg/L | MW-15B | 05/24/2000 | ND | 0.4300 | |
| Potassium, dissolved | mg/L | MW-15B | 08/22/2000 | | 0.3700 | |
| Potassium, dissolved | mg/L | MW-15B | 11/08/2000 | ND | 0.5000 | |
| Potassium, dissolved | mg/L | MW-15B | 01/30/2001 | ND | 0.5000 | |
| Potassium, dissolved | mg/L | MW-15B | 04/24/2001 | ND | 0.5000 | |
| Potassium, dissolved | mg/L | MW-15B | 08/28/2001 | ND | 0.5000 | |
| Potassium, dissolved | mg/L | MW-15B | 11/06/2001 | ND | 0.5000 | |
| Potassium, dissolved | mg/L | MW-15B | 01/31/2002 | ND | 0.5000 | |
| Potassium, dissolved | mg/L | MW-15B | 04/09/2002 | ND | 0.5000 | |
| Potassium, dissolved | mg/L | MW-15B | 07/23/2002 | ND | 0.5000 | |
| Potassium, dissolved | mg/L | MW-15B | 10/10/2002 | ND | 0.5000 | |
| Potassium, dissolved | mg/L | MW-15B | 02/25/2003 | | 0.8800 | |
| Potassium, dissolved | mg/L | MW-15B | 05/13/2003 | | 0.5100 | |
| Potassium, dissolved | mg/L | MW-15B | 08/20/2003 | ND | 0.5000 | |
| Potassium, dissolved | mg/L | MW-15B | 11/18/2003 | ND | 0.5000 | |
| Potassium, dissolved | mg/L | MW-15B | 04/20/2004 | ND | 0.5000 | |
| Potassium, dissolved | mg/L | MW-15B | 11/09/2004 | ND | 0.5000 | |
| Potassium, dissolved | mg/L | MW-15B | 06/06/2005 | ND | 0.5000 | |
| Potassium, dissolved | mg/L | MW-15B | 10/25/2005 | ND | 0.5000 | |
| Potassium, dissolved | mg/L | MW-15B | 05/09/2006 | ND | 0.5000 | |
| Potassium, dissolved | mg/L | MW-15B | 10/17/2006 | ND | 0.5000 | |
| Potassium, dissolved | mg/L | MW-15B | 05/08/2007 | ND | 0.5000 | |
| Potassium, dissolved | mg/L | MW-15B | 11/07/2007 | ND | 0.5000 | |
| Potassium, dissolved | mg/L | MW-15B | 05/20/2008 | ND | 0.5000 | |
| Potassium, dissolved | mg/L | MW-15B | 11/11/2008 | | 0.6600 | |
| Potassium, dissolved | mg/L | MW-15B | 05/05/2009 | ND | 0.5000 | |
| Potassium, dissolved | mg/L | MW-15B | 11/17/2009 | ND | 0.5000 | |
| Potassium, dissolved | mg/L | MW-15B | 04/20/2010 | ND | 0.5000 | |

* - Outlier for that well and constituent.
ND = Not detected, result = detection limit.

# Table 1

## Upgradient Data

| Constituent | Units | Well | Date | | Result | |
|---|---|---|---|---|---|---|
| Potassium, dissolved | mg/L | MW-15B | 10/05/2010 | ND | 0.5000 | |
| Potassium, dissolved | mg/L | MW-15B | 04/14/2011 | | 0.5100 | |
| Potassium, dissolved | mg/L | MW-15B | 11/02/2011 | ND | 0.5000 | |
| Potassium, dissolved | mg/L | MW-15B | 05/02/2012 | ND | 0.5000 | |
| Potassium, dissolved | mg/L | MW-15B | 11/13/2012 | ND | 0.5000 | |
| Sodium, dissolved | mg/L | MW-15B | 04/04/1997 | | 39.6000 | |
| Sodium, dissolved | mg/L | MW-15B | 05/19/1997 | | 39.2000 | |
| Sodium, dissolved | mg/L | MW-15B | 09/11/1997 | | 37.0000 | |
| Sodium, dissolved | mg/L | MW-15B | 12/19/1997 | | 38.8000 | |
| Sodium, dissolved | mg/L | MW-15B | 03/18/1998 | | 35.1000 | |
| Sodium, dissolved | mg/L | MW-15B | 06/11/1998 | | 37.1000 | |
| Sodium, dissolved | mg/L | MW-15B | 08/20/1998 | | 38.2000 | |
| Sodium, dissolved | mg/L | MW-15B | 12/17/1998 | | 38.4000 | |
| Sodium, dissolved | mg/L | MW-15B | 03/26/1999 | | 34.3000 | |
| Sodium, dissolved | mg/L | MW-15B | 06/18/1999 | | 35.3000 | |
| Sodium, dissolved | mg/L | MW-15B | 09/15/1999 | | 39.5000 | |
| Sodium, dissolved | mg/L | MW-15B | 12/13/1999 | | 37.6000 | |
| Sodium, dissolved | mg/L | MW-15B | 02/08/2000 | | 33.4000 | |
| Sodium, dissolved | mg/L | MW-15B | 05/24/2000 | | 40.2000 | |
| Sodium, dissolved | mg/L | MW-15B | 08/22/2000 | | 38.4000 | |
| Sodium, dissolved | mg/L | MW-15B | 11/08/2000 | | 36.8000 | |
| Sodium, dissolved | mg/L | MW-15B | 01/30/2001 | | 38.0000 | |
| Sodium, dissolved | mg/L | MW-15B | 04/24/2001 | | 38.5000 | |
| Sodium, dissolved | mg/L | MW-15B | 08/28/2001 | | 37.4000 | |
| Sodium, dissolved | mg/L | MW-15B | 11/06/2001 | | 41.3000 | |
| Sodium, dissolved | mg/L | MW-15B | 01/31/2002 | | 33.6000 | |
| Sodium, dissolved | mg/L | MW-15B | 04/09/2002 | | 34.7000 | |
| Sodium, dissolved | mg/L | MW-15B | 07/23/2002 | | 38.6000 | |
| Sodium, dissolved | mg/L | MW-15B | 10/10/2002 | | 38.0000 | |
| Sodium, dissolved | mg/L | MW-15B | 02/25/2003 | | 35.0000 | |
| Sodium, dissolved | mg/L | MW-15B | 05/13/2003 | | 35.0000 | |
| Sodium, dissolved | mg/L | MW-15B | 08/20/2003 | | 38.0000 | |
| Sodium, dissolved | mg/L | MW-15B | 11/18/2003 | | 37.0000 | |
| Sodium, dissolved | mg/L | MW-15B | 04/20/2004 | | 35.0000 | |
| Sodium, dissolved | mg/L | MW-15B | 11/09/2004 | | 42.0000 | |
| Sodium, dissolved | mg/L | MW-15B | 06/06/2005 | | 40.0000 | |
| Sodium, dissolved | mg/L | MW-15B | 10/25/2005 | | 38.0000 | |
| Sodium, dissolved | mg/L | MW-15B | 05/09/2006 | | 33.0000 | |
| Sodium, dissolved | mg/L | MW-15B | 10/17/2006 | | 35.0000 | |
| Sodium, dissolved | mg/L | MW-15B | 05/08/2007 | | 35.0000 | |
| Sodium, dissolved | mg/L | MW-15B | 11/07/2007 | | 36.0000 | |
| Sodium, dissolved | mg/L | MW-15B | 05/20/2008 | | 38.0000 | |
| Sodium, dissolved | mg/L | MW-15B | 11/11/2008 | | 36.0000 | |
| Sodium, dissolved | mg/L | MW-15B | 05/05/2009 | | 36.0000 | |

* - Outlier for that well and constituent.
ND = Not detected, result = detection limit.

# Table 1

## Upgradient Data

| Constituent | Units | Well | Date | | Result | |
|---|---|---|---|---|---|---|
| Sodium, dissolved | mg/L | MW-15B | 11/17/2009 | | 37.0000 | |
| Sodium, dissolved | mg/L | MW-15B | 04/20/2010 | | 38.0000 | |
| Sodium, dissolved | mg/L | MW-15B | 10/05/2010 | | 38.0000 | |
| Sodium, dissolved | mg/L | MW-15B | 04/14/2011 | | 39.0000 | |
| Sodium, dissolved | mg/L | MW-15B | 11/02/2011 | | 35.0000 | |
| Sodium, dissolved | mg/L | MW-15B | 05/02/2012 | | 35.0000 | |
| Sodium, dissolved | mg/L | MW-15B | 11/13/2012 | | 37.0000 | |
| Sulfate | mg/L | MW-15B | 04/04/1997 | | 7.1000 | |
| Sulfate | mg/L | MW-15B | 05/19/1997 | | 3.9000 | |
| Sulfate | mg/L | MW-15B | 09/11/1997 | | 2.8000 | |
| Sulfate | mg/L | MW-15B | 12/19/1997 | | 3.9000 | |
| Sulfate | mg/L | MW-15B | 03/18/1998 | | 9.1000 | |
| Sulfate | mg/L | MW-15B | 06/11/1998 | | 8.7000 | |
| Sulfate | mg/L | MW-15B | 08/20/1998 | | 3.8000 | |
| Sulfate | mg/L | MW-15B | 12/17/1998 | | 2.3000 | |
| Sulfate | mg/L | MW-15B | 03/26/1999 | | 10.7000 | |
| Sulfate | mg/L | MW-15B | 06/18/1999 | | 5.8000 | |
| Sulfate | mg/L | MW-15B | 12/13/1999 | | 2.2000 | |
| Sulfate | mg/L | MW-15B | 02/08/2000 | | 9.2000 | |
| Sulfate | mg/L | MW-15B | 05/24/2000 | | 10.9000 | |
| Sulfate | mg/L | MW-15B | 08/22/2000 | | 1.8000 | |
| Sulfate | mg/L | MW-15B | 11/08/2000 | | 2.2000 | |
| Sulfate | mg/L | MW-15B | 01/30/2001 | | 2.8000 | |
| Sulfate | mg/L | MW-15B | 04/24/2001 | | 2.0000 | |
| Sulfate | mg/L | MW-15B | 08/28/2001 | | 1.6000 | |
| Sulfate | mg/L | MW-15B | 11/06/2001 | | 1.2000 | |
| Sulfate | mg/L | MW-15B | 01/31/2002 | | 3.6000 | |
| Sulfate | mg/L | MW-15B | 04/09/2002 | | 2.8000 | |
| Sulfate | mg/L | MW-15B | 07/23/2002 | | 1.9000 | |
| Sulfate | mg/L | MW-15B | 10/10/2002 | | 1.9000 | |
| Sulfate | mg/L | MW-15B | 02/25/2003 | | 3.4000 | |
| Sulfate | mg/L | MW-15B | 05/13/2003 | | 2.6000 | |
| Sulfate | mg/L | MW-15B | 08/20/2003 | | 2.0000 | |
| Sulfate | mg/L | MW-15B | 11/18/2003 | | 2.3000 | |
| Sulfate | mg/L | MW-15B | 04/20/2004 | | 2.0000 | |
| Sulfate | mg/L | MW-15B | 11/09/2004 | | 1.3000 | |
| Sulfate | mg/L | MW-15B | 05/24/2005 | ND | 1.0000 | |
| Sulfate | mg/L | MW-15B | 10/25/2005 | | 2.2000 | |
| Sulfate | mg/L | MW-15B | 05/09/2006 | | 1.8000 | |
| Sulfate | mg/L | MW-15B | 10/17/2006 | ND | 1.0000 | |
| Sulfate | mg/L | MW-15B | 05/08/2007 | | 1.8000 | |
| Sulfate | mg/L | MW-15B | 11/07/2007 | | 1.4000 | |
| Sulfate | mg/L | MW-15B | 05/20/2008 | | 2.0000 | |
| Sulfate | mg/L | MW-15B | 11/11/2008 | | 2.0000 | |

* - Outlier for that well and constituent.
ND = Not detected, result = detection limit.

# Table 1

## Upgradient Data

| Constituent | Units | Well | Date | | Result | |
|---|---|---|---|---|---|---|
| Sulfate | mg/L | MW-15B | 05/05/2009 | | 1.9000 | |
| Sulfate | mg/L | MW-15B | 11/17/2009 | | 2.2000 | |
| Sulfate | mg/L | MW-15B | 04/20/2010 | | 2.2000 | |
| Sulfate | mg/L | MW-15B | 10/05/2010 | | 1.4000 | |
| Sulfate | mg/L | MW-15B | 04/14/2011 | | 2.5000 | |
| Sulfate | mg/L | MW-15B | 11/02/2011 | | 1.7000 | |
| Sulfate | mg/L | MW-15B | 05/02/2012 | | 2.1000 | |
| Sulfate | mg/L | MW-15B | 11/13/2012 | | 1.7000 | |
| Total dissolved solids (tds) | mg/L | MW-15B | 04/04/1997 | | 454.0000 | |
| Total dissolved solids (tds) | mg/L | MW-15B | 05/19/1997 | | 454.0000 | |
| Total dissolved solids (tds) | mg/L | MW-15B | 09/11/1997 | | 456.0000 | |
| Total dissolved solids (tds) | mg/L | MW-15B | 12/19/1997 | | 457.0000 | |
| Total dissolved solids (tds) | mg/L | MW-15B | 03/18/1998 | | 380.0000 | |
| Total dissolved solids (tds) | mg/L | MW-15B | 06/11/1998 | | 462.0000 | |
| Total dissolved solids (tds) | mg/L | MW-15B | 08/20/1998 | | 412.0000 | |
| Total dissolved solids (tds) | mg/L | MW-15B | 12/17/1998 | | 426.0000 | |
| Total dissolved solids (tds) | mg/L | MW-15B | 03/26/1999 | | 369.0000 | |
| Total dissolved solids (tds) | mg/L | MW-15B | 06/18/1999 | | 8.0000 | * |
| Total dissolved solids (tds) | mg/L | MW-15B | 12/13/1999 | | 401.0000 | |
| Total dissolved solids (tds) | mg/L | MW-15B | 02/08/2000 | | 302.0000 | |
| Total dissolved solids (tds) | mg/L | MW-15B | 05/24/2000 | | 412.0000 | |
| Total dissolved solids (tds) | mg/L | MW-15B | 08/22/2000 | | 490.0000 | |
| Total dissolved solids (tds) | mg/L | MW-15B | 11/08/2000 | | 400.0000 | |
| Total dissolved solids (tds) | mg/L | MW-15B | 01/30/2001 | | 403.0000 | |
| Total dissolved solids (tds) | mg/L | MW-15B | 04/24/2001 | | 534.0000 | |
| Total dissolved solids (tds) | mg/L | MW-15B | 08/08/2001 | | 413.0000 | |
| Total dissolved solids (tds) | mg/L | MW-15B | 08/28/2001 | | 380.0000 | |
| Total dissolved solids (tds) | mg/L | MW-15B | 11/06/2001 | | 512.0000 | |
| Total dissolved solids (tds) | mg/L | MW-15B | 01/31/2002 | | 299.0000 | |
| Total dissolved solids (tds) | mg/L | MW-15B | 04/09/2002 | | 477.0000 | |
| Total dissolved solids (tds) | mg/L | MW-15B | 07/23/2002 | | 581.0000 | |
| Total dissolved solids (tds) | mg/L | MW-15B | 10/10/2002 | | 430.0000 | |
| Total dissolved solids (tds) | mg/L | MW-15B | 02/25/2003 | | 340.0000 | |
| Total dissolved solids (tds) | mg/L | MW-15B | 05/13/2003 | | 430.0000 | |
| Total dissolved solids (tds) | mg/L | MW-15B | 08/20/2003 | | 420.0000 | |
| Total dissolved solids (tds) | mg/L | MW-15B | 11/18/2003 | | 440.0000 | |
| Total dissolved solids (tds) | mg/L | MW-15B | 04/20/2004 | | 380.0000 | |
| Total dissolved solids (tds) | mg/L | MW-15B | 11/09/2004 | | 410.0000 | |
| Total dissolved solids (tds) | mg/L | MW-15B | 05/24/2005 | | 420.0000 | |
| Total dissolved solids (tds) | mg/L | MW-15B | 10/25/2005 | | 420.0000 | |
| Total dissolved solids (tds) | mg/L | MW-15B | 05/09/2006 | | 400.0000 | |
| Total dissolved solids (tds) | mg/L | MW-15B | 10/17/2006 | | 410.0000 | |
| Total dissolved solids (tds) | mg/L | MW-15B | 05/08/2007 | | 400.0000 | |
| Total dissolved solids (tds) | mg/L | MW-15B | 11/07/2007 | | 420.0000 | |

* - Outlier for that well and constituent.
ND = Not detected, result = detection limit.

# Table 1

## Upgradient Data

| Constituent | Units | Well | Date | | Result | |
|---|---|---|---|---|---|---|
| Total dissolved solids (tds) | mg/L | MW-15B | 05/20/2008 | | 410.0000 | |
| Total dissolved solids (tds) | mg/L | MW-15B | 11/11/2008 | | 400.0000 | |
| Total dissolved solids (tds) | mg/L | MW-15B | 05/05/2009 | | 390.0000 | |
| Total dissolved solids (tds) | mg/L | MW-15B | 11/17/2009 | | 340.0000 | |
| Total dissolved solids (tds) | mg/L | MW-15B | 04/20/2010 | | 360.0000 | |
| Total dissolved solids (tds) | mg/L | MW-15B | 10/05/2010 | | 400.0000 | |
| Total dissolved solids (tds) | mg/L | MW-15B | 04/14/2011 | | 370.0000 | |
| Total dissolved solids (tds) | mg/L | MW-15B | 11/02/2011 | | 380.0000 | |
| Total dissolved solids (tds) | mg/L | MW-15B | 05/02/2012 | | 380.0000 | |
| Total dissolved solids (tds) | mg/L | MW-15B | 11/13/2012 | | 400.0000 | |
| Total organic carbon (toc) | mg/L | MW-15B | 04/04/1997 | | 1.8000 | |
| Total organic carbon (toc) | mg/L | MW-15B | 05/19/1997 | | 1.3000 | |
| Total organic carbon (toc) | mg/L | MW-15B | 09/11/1997 | ND | 1.0000 | |
| Total organic carbon (toc) | mg/L | MW-15B | 12/19/1997 | ND | 1.0000 | |
| Total organic carbon (toc) | mg/L | MW-15B | 03/18/1998 | | 1.1000 | |
| Total organic carbon (toc) | mg/L | MW-15B | 06/11/1998 | ND | 1.0000 | |
| Total organic carbon (toc) | mg/L | MW-15B | 08/20/1998 | ND | 1.0000 | |
| Total organic carbon (toc) | mg/L | MW-15B | 12/17/1998 | | 0.6000 | |
| Total organic carbon (toc) | mg/L | MW-15B | 03/26/1999 | ND | 1.0000 | |
| Total organic carbon (toc) | mg/L | MW-15B | 06/18/1999 | | 1.0000 | |
| Total organic carbon (toc) | mg/L | MW-15B | 12/13/1999 | | 1.0000 | |
| Total organic carbon (toc) | mg/L | MW-15B | 02/08/2000 | ND | 1.0000 | |
| Total organic carbon (toc) | mg/L | MW-15B | 05/24/2000 | ND | 1.0000 | |
| Total organic carbon (toc) | mg/L | MW-15B | 08/22/2000 | ND | 1.0000 | |
| Total organic carbon (toc) | mg/L | MW-15B | 11/08/2000 | | 1.2000 | |
| Total organic carbon (toc) | mg/L | MW-15B | 01/30/2001 | | 2.1000 | |
| Total organic carbon (toc) | mg/L | MW-15B | 04/24/2001 | | 1.0000 | |
| Total organic carbon (toc) | mg/L | MW-15B | 08/28/2001 | ND | 1.0000 | |
| Total organic carbon (toc) | mg/L | MW-15B | 11/06/2001 | | 1.5000 | |
| Total organic carbon (toc) | mg/L | MW-15B | 01/31/2002 | | 1.5000 | |
| Total organic carbon (toc) | mg/L | MW-15B | 04/09/2002 | | 1.0000 | |
| Total organic carbon (toc) | mg/L | MW-15B | 07/23/2002 | | 1.9000 | |
| Total organic carbon (toc) | mg/L | MW-15B | 10/10/2002 | | 1.2250 | |
| Total organic carbon (toc) | mg/L | MW-15B | 02/25/2003 | ND | 1.0000 | |
| Total organic carbon (toc) | mg/L | MW-15B | 05/13/2003 | ND | 1.0000 | |
| Total organic carbon (toc) | mg/L | MW-15B | 08/20/2003 | ND | 1.0000 | |
| Total organic carbon (toc) | mg/L | MW-15B | 11/18/2003 | ND | 1.0000 | |
| Total organic carbon (toc) | mg/L | MW-15B | 04/20/2004 | | 1.9000 | |
| Total organic carbon (toc) | mg/L | MW-15B | 11/09/2004 | | 2.1000 | |
| Total organic carbon (toc) | mg/L | MW-15B | 05/24/2005 | ND | 1.0000 | |
| Total organic carbon (toc) | mg/L | MW-15B | 10/25/2005 | ND | 1.0000 | |
| Total organic carbon (toc) | mg/L | MW-15B | 05/09/2006 | | 1.4000 | |
| Total organic carbon (toc) | mg/L | MW-15B | 10/17/2006 | ND | 1.0000 | |
| Total organic carbon (toc) | mg/L | MW-15B | 05/08/2007 | ND | 1.0000 | |

* - Outlier for that well and constituent.
ND = Not detected, result = detection limit.

# Table 1

## Upgradient Data

| Constituent | Units | Well | Date | | Result | |
|---|---|---|---|---|---|---|
| Total organic carbon (toc) | mg/L | MW-15B | 11/07/2007 | ND | 1.0000 | |
| Total organic carbon (toc) | mg/L | MW-15B | 05/20/2008 | ND | 1.0000 | |
| Total organic carbon (toc) | mg/L | MW-15B | 11/11/2008 | ND | 1.0000 | |
| Total organic carbon (toc) | mg/L | MW-15B | 05/05/2009 | ND | 1.0000 | |
| Total organic carbon (toc) | mg/L | MW-15B | 11/17/2009 | ND | 1.0000 | |
| Total organic carbon (toc) | mg/L | MW-15B | 04/20/2010 | ND | 1.0000 | |
| Total organic carbon (toc) | mg/L | MW-15B | 10/05/2010 | ND | 1.0000 | |
| Total organic carbon (toc) | mg/L | MW-15B | 04/14/2011 | ND | 1.0000 | |
| Total organic carbon (toc) | mg/L | MW-15B | 11/02/2011 | ND | 1.0000 | |
| Total organic carbon (toc) | mg/L | MW-15B | 05/02/2012 | ND | 1.0000 | |
| Total organic carbon (toc) | mg/L | MW-15B | 11/13/2012 | ND | 1.0000 | |

* - Outlier for that well and constituent.
ND = Not detected, result = detection limit.

# Table 2

## Shapiro Wilk Test of Normality for Multiple Groups

| Constituent | N (Detects) | Detect Freq | G raw | G log | Critical Value | Limit Type |
|---|---|---|---|---|---|---|
| Alkalinity, bicarbonate (as caco3) | 45 | 1.000 | 1.174 | 1.732 | 2.326 | normal |
| Magnesium, dissolved | 46 | 1.000 | 0.839 | 1.458 | 2.326 | normal |
| Potassium, dissolved | 15 | 0.333 | 0.892 | 0.311 | 2.326 | nonpar |
| Sodium, dissolved | 46 | 1.000 | 0.443 | 0.500 | 2.326 | normal |
| Sulfate | 43 | 0.956 | 6.184 | 4.625 | 2.326 | nonpar |
| Total dissolved solids (tds) | 45 | 1.000 | 1.487 | 0.833 | 2.326 | normal |
| Total organic carbon (toc) | 17 | 0.378 | 0.579 | 0.332 | 2.326 | nonpar |

Fit to distribution is confirmed if G < critical value.
If detection frequency is < 50% nonparametric or Poisson limit is used

# Table 3

## Summary Statistics and Prediction Limits

| Constituent | Units | Model Type | N | Detect | Mean | SD | Pred Limit | Conf* |
|---|---|---|---|---|---|---|---|---|
| Alkalinity, bicarbonate (as caco3) | mg/L | normal | 45 | 45 | 324.8444 | 19.4539 | 372.3260 | |
| Magnesium, dissolved | mg/L | normal | 46 | 46 | 30.8326 | 2.2512 | 36.3214 | |
| Potassium, dissolved | mg/L | nonpar | 45 | 15 | | | 0.6800 | 0.99 |
| Sodium, dissolved | mg/L | normal | 46 | 46 | 37.1087 | 2.0850 | 42.1921 | |
| Sulfate | mg/L | nonpar | 45 | 43 | | | 10.7000 | 0.99 |
| Total dissolved solids (tds) | mg/L | normal | 45 | 45 | 413.8667 | 53.0238 | 543.2835 | |
| Total organic carbon (toc) | mg/L | nonpar | 45 | 17 | | | 2.1000 | 0.99 |

* - Confidence level for passing initial test or one verification resample at all downgradient wells for a single constituent (nonparametric test only).
Model Type refers to type of prediction limit.
For lognormal limit, mean and sd in natural log units and prediction limit in original units.
All sample sizes and statistics are based on outlier free data.
For nonparametric limits, median reporting limits are substituted for extreme reporting limit values.

## Worksheet 1

## Alkalinity, bicarbonate (as caco3) (mg/L)

## Normal Prediction Limit

| Step | Equation | Description |
|---|---|---|
| 1 | $\overline{X}$ = **sum[X]** / **N**<br>= **14618.0** / **45**<br>= **324.844** | Compute upgradient mean. |
| 2 | S = ( (**sum[X$^2$]** - **sum[X]**$^2$/**N**) / (**N**-1) )$^{½}$<br>= ( (**4.77**x**10$^6$** - **2.14**x**10$^8$**/**45**) / (**45**-1) )$^{½}$<br>= **19.454** | Compute upgradient sd. |
| 3 | alpha = min[ (1-.95$^{1/K}$)$^{½}$ or .01 ]<br>= min[ (1-.95$^{1/7}$)$^{½}$ or .01 ]<br>= **0.01** | Adjusted per comparison false positive rate. Pass initial or 1 resample. |
| 4 | PL = $\overline{X}$ + **tS**(1+1/**N**)$^{½}$<br>= **324.844** + (**2.414***19.454)(1+1/**45**)$^{½}$<br>= **372.326** | One-sided normal prediction limit (t is Student's t on N-1 degrees of freedom and 1-alpha confidence level). |

## Worksheet 2

## Magnesium, dissolved (mg/L)

## Normal Prediction Limit

| Step | Equation | Description |
|---|---|---|
| 1 | $\overline{X}$ = **sum[X] / N**<br>= **1418.3 / 46**<br>= **30.833** | Compute upgradient mean. |
| 2 | S = ( (**sum[X$^2$] - sum[X]$^2$/N**) / (**N**-1) )$^{½}$<br>= ( (**43957.95 - 2.01**x**10$^6$/46**) / (**46**-1) )$^{½}$<br>= **2.251** | Compute upgradient sd. |
| 3 | alpha = min[ (1-.95$^{1/K}$)$^{½}$ or .01 ]<br>= min[ (1-.95$^{1/7}$)$^{½}$ or .01 ]<br>= **0.01** | Adjusted per comparison false positive rate. Pass initial or 1 resample. |
| 4 | PL = $\overline{X}$ + **tS**(1+1/**N**)$^{½}$<br>= **30.833** + (**2.412***2.251)(1+1/**46**)$^{½}$<br>= **36.321** | One-sided normal prediction limit (t is Student's t on N-1 degrees of freedom and 1-alpha confidence level). |

## Worksheet 3

## Potassium, dissolved (mg/L)

## Nonparametric Prediction Limit

| Step | Equation | Description |
|---|---|---|
| 1 | PL = 2nd max(X)<br>= **0.68** | Compute nonparametric prediction limit as 2nd largest background det value. |
| 2 | Confidence = **0.99** | Confidence level is based on N, K and resampling strategy (see Gibbons 1994). |

## Worksheet 4

## Sodium, dissolved (mg/L)

## Normal Prediction Limit

| Step | Equation | Description |
|---|---|---|
| 1 | $\overline{X}$ = **sum[X] / N**<br>= **1707.0 / 46**<br>= **37.109** | Compute upgradient mean. |
| 2 | S = ( (**sum[X$^2$] - sum[X]$^2$/N**) / (**N**-1) )$^{½}$<br>= ( (**63540.16 - 2.91**x**10$^6$/46**) / (**46**-1) )$^{½}$<br>= **2.085** | Compute upgradient sd. |
| 3 | alpha = min[ (1-.95$^{1/K}$)$^{½}$ or .01 ]<br>= min[ (1-.95$^{1/7}$)$^{½}$ or .01 ]<br>= **0.01** | Adjusted per comparison false positive rate. Pass initial or 1 resample. |
| 4 | PL = $\overline{X}$ + **tS**(1+1/**N**)$^{½}$<br>= **37.109** + (**2.412***2.085)(1+1/**46**)$^{½}$<br>= **42.192** | One-sided normal prediction limit (t is Student's t on N-1 degrees of freedom and 1-alpha confidence level). |

## Worksheet 5

## Sulfate (mg/L)

## Nonparametric Prediction Limit

| Step | Equation | Description |
|---|---|---|
| 1 | PL = 2nd max(X)<br>= **10.7** | Compute nonparametric prediction limit as 2nd largest background det value. |
| 2 | Confidence = **0.99** | Confidence level is based on N, K and resampling strategy (see Gibbons 1994). |

## Worksheet 6

## Total dissolved solids (tds) (mg/L)

## Normal Prediction Limit

| Step | Equation | Description |
|---|---|---|
| 1 | $\overline{X}$ = **sum[X] / N**<br>= **18624.0 / 45**<br>= **413.867** | Compute upgradient mean. |
| 2 | S = ( (**sum[$X^2$] - sum[X]$^2$/N**) / (**N**-1) )$^{½}$<br>= ( (**7.83**x**10$^6$ - 3.47**x**10$^8$/45**) / (**45**-1) )$^{½}$<br>= **53.024** | Compute upgradient sd. |
| 3 | alpha = min[ (1-.95$^{1/K}$)$^{½}$ or .01 ]<br>= min[ (1-.95$^{1/7}$)$^{½}$ or .01 ]<br>= **0.01** | Adjusted per comparison false positive rate. Pass initial or 1 resample. |
| 4 | PL = $\overline{X}$ + **tS**(1+1/**N**)$^{½}$<br>= **413.867** + (**2.414***53.024)(1+1/**45**)$^{½}$<br>= **543.284** | One-sided normal prediction limit (t is Student's t on N-1 degrees of freedom and 1-alpha confidence level). |

## Worksheet 7

## Total organic carbon (toc) (mg/L)

## Nonparametric Prediction Limit

| Step | Equation | Description |
|---|---|---|
| 1 | PL = 2nd max(X)<br>= **2.1** | Compute nonparametric prediction limit as 2nd largest background det value. |
| 2 | Confidence = **0.99** | Confidence level is based on N, K and resampling strategy (see Gibbons 1994). |

**MW-16B**

# Table 1

## Upgradient Data

| Constituent | Units | Well | Date | | Result | |
|---|---|---|---|---|---|---|
| Alkalinity, bicarbonate (as caco3) | mg/L | MW-16B | 04/01/1997 | | 329.0000 | |
| Alkalinity, bicarbonate (as caco3) | mg/L | MW-16B | 05/19/1997 | | 338.0000 | |
| Alkalinity, bicarbonate (as caco3) | mg/L | MW-16B | 09/12/1997 | | 341.0000 | |
| Alkalinity, bicarbonate (as caco3) | mg/L | MW-16B | 12/22/1997 | | 352.0000 | |
| Alkalinity, bicarbonate (as caco3) | mg/L | MW-16B | 03/18/1998 | | 360.0000 | |
| Alkalinity, bicarbonate (as caco3) | mg/L | MW-16B | 06/11/1998 | | 352.0000 | |
| Alkalinity, bicarbonate (as caco3) | mg/L | MW-16B | 08/21/1998 | | 365.0000 | |
| Alkalinity, bicarbonate (as caco3) | mg/L | MW-16B | 12/17/1998 | | 342.0000 | |
| Alkalinity, bicarbonate (as caco3) | mg/L | MW-16B | 03/26/1999 | | 341.0000 | |
| Alkalinity, bicarbonate (as caco3) | mg/L | MW-16B | 06/17/1999 | | 338.0000 | |
| Alkalinity, bicarbonate (as caco3) | mg/L | MW-16B | 12/13/1999 | | 357.0000 | |
| Alkalinity, bicarbonate (as caco3) | mg/L | MW-16B | 02/09/2000 | | 362.0000 | |
| Alkalinity, bicarbonate (as caco3) | mg/L | MW-16B | 05/25/2000 | | 323.0000 | |
| Alkalinity, bicarbonate (as caco3) | mg/L | MW-16B | 08/22/2000 | | 335.0000 | |
| Alkalinity, bicarbonate (as caco3) | mg/L | MW-16B | 11/08/2000 | | 345.0000 | |
| Alkalinity, bicarbonate (as caco3) | mg/L | MW-16B | 01/30/2001 | | 358.0000 | |
| Alkalinity, bicarbonate (as caco3) | mg/L | MW-16B | 04/24/2001 | | 348.0000 | |
| Alkalinity, bicarbonate (as caco3) | mg/L | MW-16B | 08/28/2001 | | 332.0000 | |
| Alkalinity, bicarbonate (as caco3) | mg/L | MW-16B | 11/06/2001 | | 325.0000 | |
| Alkalinity, bicarbonate (as caco3) | mg/L | MW-16B | 01/31/2002 | | 314.0000 | |
| Alkalinity, bicarbonate (as caco3) | mg/L | MW-16B | 04/09/2002 | | 356.0000 | |
| Alkalinity, bicarbonate (as caco3) | mg/L | MW-16B | 07/23/2002 | | 302.0000 | |
| Alkalinity, bicarbonate (as caco3) | mg/L | MW-16B | 10/09/2002 | | 340.0000 | |
| Alkalinity, bicarbonate (as caco3) | mg/L | MW-16B | 02/25/2003 | | 330.0000 | |
| Alkalinity, bicarbonate (as caco3) | mg/L | MW-16B | 05/13/2003 | | 350.0000 | |
| Alkalinity, bicarbonate (as caco3) | mg/L | MW-16B | 08/19/2003 | | 220.0000 | * |
| Alkalinity, bicarbonate (as caco3) | mg/L | MW-16B | 11/18/2003 | | 330.0000 | |
| Alkalinity, bicarbonate (as caco3) | mg/L | MW-16B | 04/20/2004 | | 360.0000 | |
| Alkalinity, bicarbonate (as caco3) | mg/L | MW-16B | 11/09/2004 | | 340.0000 | |
| Alkalinity, bicarbonate (as caco3) | mg/L | MW-16B | 05/24/2005 | | 360.0000 | |
| Alkalinity, bicarbonate (as caco3) | mg/L | MW-16B | 10/25/2005 | | 330.0000 | |
| Alkalinity, bicarbonate (as caco3) | mg/L | MW-16B | 05/09/2006 | | 340.0000 | |
| Alkalinity, bicarbonate (as caco3) | mg/L | MW-16B | 10/17/2006 | | 340.0000 | |
| Alkalinity, bicarbonate (as caco3) | mg/L | MW-16B | 05/08/2007 | | 350.0000 | |
| Alkalinity, bicarbonate (as caco3) | mg/L | MW-16B | 11/07/2007 | | 320.0000 | |
| Alkalinity, bicarbonate (as caco3) | mg/L | MW-16B | 05/20/2008 | | 370.0000 | |
| Alkalinity, bicarbonate (as caco3) | mg/L | MW-16B | 11/11/2008 | | 340.0000 | |
| Alkalinity, bicarbonate (as caco3) | mg/L | MW-16B | 05/05/2009 | | 370.0000 | |
| Alkalinity, bicarbonate (as caco3) | mg/L | MW-16B | 11/17/2009 | | 360.0000 | |
| Alkalinity, bicarbonate (as caco3) | mg/L | MW-16B | 04/20/2010 | | 360.0000 | |
| Alkalinity, bicarbonate (as caco3) | mg/L | MW-16B | 10/05/2010 | | 350.0000 | |
| Alkalinity, bicarbonate (as caco3) | mg/L | MW-16B | 04/14/2011 | | 370.0000 | |
| Alkalinity, bicarbonate (as caco3) | mg/L | MW-16B | 11/02/2011 | | 390.0000 | |
| Alkalinity, bicarbonate (as caco3) | mg/L | MW-16B | 05/02/2012 | | 340.0000 | |

* - Outlier for that well and constituent.
ND = Not detected, result = detection limit.

# Table 1

## Upgradient Data

| Constituent | Units | Well | Date | | Result | |
|---|---|---|---|---|---|---|
| Alkalinity, bicarbonate (as caco3) | mg/L | MW-16B | 11/13/2012 | | 370.0000 | |
| Magnesium, dissolved | mg/L | MW-16B | 04/01/1997 | | 32.6000 | |
| Magnesium, dissolved | mg/L | MW-16B | 05/19/1997 | | 34.0000 | |
| Magnesium, dissolved | mg/L | MW-16B | 09/12/1997 | | 36.0000 | |
| Magnesium, dissolved | mg/L | MW-16B | 12/22/1997 | | 36.2000 | |
| Magnesium, dissolved | mg/L | MW-16B | 03/18/1998 | | 34.0000 | |
| Magnesium, dissolved | mg/L | MW-16B | 06/11/1998 | | 34.4000 | |
| Magnesium, dissolved | mg/L | MW-16B | 08/21/1998 | | 38.1000 | |
| Magnesium, dissolved | mg/L | MW-16B | 12/17/1998 | | 38.1000 | |
| Magnesium, dissolved | mg/L | MW-16B | 03/26/1999 | | 36.0000 | |
| Magnesium, dissolved | mg/L | MW-16B | 06/17/1999 | | 39.2000 | |
| Magnesium, dissolved | mg/L | MW-16B | 09/15/1999 | | 39.3000 | |
| Magnesium, dissolved | mg/L | MW-16B | 12/13/1999 | | 39.9000 | |
| Magnesium, dissolved | mg/L | MW-16B | 02/09/2000 | | 36.7000 | |
| Magnesium, dissolved | mg/L | MW-16B | 05/25/2000 | | 38.7000 | |
| Magnesium, dissolved | mg/L | MW-16B | 08/22/2000 | | 34.5000 | |
| Magnesium, dissolved | mg/L | MW-16B | 11/08/2000 | | 37.0000 | |
| Magnesium, dissolved | mg/L | MW-16B | 01/30/2001 | | 38.1000 | |
| Magnesium, dissolved | mg/L | MW-16B | 04/24/2001 | | 38.4000 | |
| Magnesium, dissolved | mg/L | MW-16B | 08/28/2001 | | 38.1000 | |
| Magnesium, dissolved | mg/L | MW-16B | 11/06/2001 | | 41.3000 | |
| Magnesium, dissolved | mg/L | MW-16B | 01/31/2002 | | 39.7000 | |
| Magnesium, dissolved | mg/L | MW-16B | 04/09/2002 | | 39.6000 | |
| Magnesium, dissolved | mg/L | MW-16B | 07/23/2002 | | 40.4000 | |
| Magnesium, dissolved | mg/L | MW-16B | 10/09/2002 | | 40.0000 | |
| Magnesium, dissolved | mg/L | MW-16B | 02/25/2003 | | 42.0000 | |
| Magnesium, dissolved | mg/L | MW-16B | 05/13/2003 | | 42.0000 | |
| Magnesium, dissolved | mg/L | MW-16B | 08/19/2003 | | 41.0000 | |
| Magnesium, dissolved | mg/L | MW-16B | 11/18/2003 | | 41.0000 | |
| Magnesium, dissolved | mg/L | MW-16B | 04/20/2004 | | 41.0000 | |
| Magnesium, dissolved | mg/L | MW-16B | 11/09/2004 | | 41.0000 | |
| Magnesium, dissolved | mg/L | MW-16B | 05/24/2005 | | 42.0000 | |
| Magnesium, dissolved | mg/L | MW-16B | 10/25/2005 | | 40.0000 | |
| Magnesium, dissolved | mg/L | MW-16B | 05/09/2006 | | 38.0000 | |
| Magnesium, dissolved | mg/L | MW-16B | 10/17/2006 | | 39.0000 | |
| Magnesium, dissolved | mg/L | MW-16B | 05/08/2007 | | 35.0000 | |
| Magnesium, dissolved | mg/L | MW-16B | 11/07/2007 | | 34.0000 | |
| Magnesium, dissolved | mg/L | MW-16B | 05/20/2008 | | 38.0000 | |
| Magnesium, dissolved | mg/L | MW-16B | 11/11/2008 | | 35.0000 | |
| Magnesium, dissolved | mg/L | MW-16B | 05/05/2009 | | 37.0000 | |
| Magnesium, dissolved | mg/L | MW-16B | 11/17/2009 | | 36.0000 | |
| Magnesium, dissolved | mg/L | MW-16B | 04/20/2010 | | 38.0000 | |
| Magnesium, dissolved | mg/L | MW-16B | 10/05/2010 | | 35.0000 | |
| Magnesium, dissolved | mg/L | MW-16B | 04/14/2011 | | 37.0000 | |

* - Outlier for that well and constituent.
ND = Not detected, result = detection limit.

# Table 1

## Upgradient Data

| Constituent | Units | Well | Date | | Result | |
|---|---|---|---|---|---|---|
| Magnesium, dissolved | mg/L | MW-16B | 11/02/2011 | | 33.0000 | |
| Magnesium, dissolved | mg/L | MW-16B | 05/02/2012 | | 33.0000 | |
| Magnesium, dissolved | mg/L | MW-16B | 11/13/2012 | | 37.0000 | |
| Potassium, dissolved | mg/L | MW-16B | 04/01/1997 | | 0.9200 | |
| Potassium, dissolved | mg/L | MW-16B | 05/19/1997 | | 0.5300 | |
| Potassium, dissolved | mg/L | MW-16B | 09/12/1997 | | 0.7000 | |
| Potassium, dissolved | mg/L | MW-16B | 12/22/1997 | | 0.7900 | |
| Potassium, dissolved | mg/L | MW-16B | 03/18/1998 | | 0.6200 | |
| Potassium, dissolved | mg/L | MW-16B | 06/11/1998 | | 0.6200 | |
| Potassium, dissolved | mg/L | MW-16B | 08/21/1998 | | 0.6900 | |
| Potassium, dissolved | mg/L | MW-16B | 12/17/1998 | ND | 2.0000 | * |
| Potassium, dissolved | mg/L | MW-16B | 03/26/1999 | | 0.7500 | |
| Potassium, dissolved | mg/L | MW-16B | 06/17/1999 | | 0.6100 | |
| Potassium, dissolved | mg/L | MW-16B | 09/15/1999 | | 0.5900 | |
| Potassium, dissolved | mg/L | MW-16B | 12/13/1999 | | 0.7800 | |
| Potassium, dissolved | mg/L | MW-16B | 02/09/2000 | | 0.7100 | |
| Potassium, dissolved | mg/L | MW-16B | 05/25/2000 | | 0.6800 | |
| Potassium, dissolved | mg/L | MW-16B | 08/22/2000 | | 0.6500 | |
| Potassium, dissolved | mg/L | MW-16B | 11/08/2000 | | 1.2000 | |
| Potassium, dissolved | mg/L | MW-16B | 01/30/2001 | | 0.5800 | |
| Potassium, dissolved | mg/L | MW-16B | 04/24/2001 | | 0.5700 | |
| Potassium, dissolved | mg/L | MW-16B | 08/28/2001 | | 0.6200 | |
| Potassium, dissolved | mg/L | MW-16B | 11/06/2001 | | 0.6400 | |
| Potassium, dissolved | mg/L | MW-16B | 01/31/2002 | | 0.6200 | |
| Potassium, dissolved | mg/L | MW-16B | 04/09/2002 | ND | 0.5000 | |
| Potassium, dissolved | mg/L | MW-16B | 07/23/2002 | | 0.5900 | |
| Potassium, dissolved | mg/L | MW-16B | 10/09/2002 | ND | 0.5000 | |
| Potassium, dissolved | mg/L | MW-16B | 02/25/2003 | | 0.9300 | |
| Potassium, dissolved | mg/L | MW-16B | 05/13/2003 | ND | 0.5000 | |
| Potassium, dissolved | mg/L | MW-16B | 08/19/2003 | ND | 0.5000 | |
| Potassium, dissolved | mg/L | MW-16B | 11/18/2003 | ND | 0.5000 | |
| Potassium, dissolved | mg/L | MW-16B | 04/20/2004 | ND | 0.5000 | |
| Potassium, dissolved | mg/L | MW-16B | 11/09/2004 | | 0.5700 | |
| Potassium, dissolved | mg/L | MW-16B | 05/24/2005 | ND | 0.5000 | |
| Potassium, dissolved | mg/L | MW-16B | 10/25/2005 | ND | 0.5000 | |
| Potassium, dissolved | mg/L | MW-16B | 05/09/2006 | | 0.5300 | |
| Potassium, dissolved | mg/L | MW-16B | 10/17/2006 | | 0.7100 | |
| Potassium, dissolved | mg/L | MW-16B | 05/08/2007 | | 0.5800 | |
| Potassium, dissolved | mg/L | MW-16B | 11/07/2007 | ND | 0.5000 | |
| Potassium, dissolved | mg/L | MW-16B | 05/20/2008 | | 0.6400 | |
| Potassium, dissolved | mg/L | MW-16B | 11/11/2008 | | 0.7400 | |
| Potassium, dissolved | mg/L | MW-16B | 05/05/2009 | | 0.5600 | |
| Potassium, dissolved | mg/L | MW-16B | 11/17/2009 | | 0.5500 | |
| Potassium, dissolved | mg/L | MW-16B | 04/20/2010 | | 0.5300 | |

* - Outlier for that well and constituent.
ND = Not detected, result = detection limit.

# Table 1

## Upgradient Data

| Constituent | Units | Well | Date | | Result | |
|---|---|---|---|---|---|---|
| Potassium, dissolved | mg/L | MW-16B | 10/05/2010 | | 0.6600 | |
| Potassium, dissolved | mg/L | MW-16B | 04/14/2011 | | 0.7800 | |
| Potassium, dissolved | mg/L | MW-16B | 11/02/2011 | | 0.5300 | |
| Potassium, dissolved | mg/L | MW-16B | 05/02/2012 | | 0.5300 | |
| Potassium, dissolved | mg/L | MW-16B | 11/13/2012 | | 0.5400 | |
| Sodium, dissolved | mg/L | MW-16B | 04/01/1997 | | 74.1000 | |
| Sodium, dissolved | mg/L | MW-16B | 05/19/1997 | | 66.2000 | |
| Sodium, dissolved | mg/L | MW-16B | 09/12/1997 | | 70.5000 | |
| Sodium, dissolved | mg/L | MW-16B | 12/22/1997 | | 68.3000 | |
| Sodium, dissolved | mg/L | MW-16B | 03/18/1998 | | 73.4000 | |
| Sodium, dissolved | mg/L | MW-16B | 06/11/1998 | | 70.6000 | |
| Sodium, dissolved | mg/L | MW-16B | 08/21/1998 | | 73.2000 | |
| Sodium, dissolved | mg/L | MW-16B | 12/17/1998 | | 70.1000 | |
| Sodium, dissolved | mg/L | MW-16B | 03/26/1999 | | 77.1000 | |
| Sodium, dissolved | mg/L | MW-16B | 06/17/1999 | | 69.6000 | |
| Sodium, dissolved | mg/L | MW-16B | 09/15/1999 | | 75.5000 | |
| Sodium, dissolved | mg/L | MW-16B | 12/13/1999 | | 75.1000 | |
| Sodium, dissolved | mg/L | MW-16B | 02/09/2000 | | 74.8000 | |
| Sodium, dissolved | mg/L | MW-16B | 05/25/2000 | | 80.1000 | |
| Sodium, dissolved | mg/L | MW-16B | 08/22/2000 | | 69.4000 | |
| Sodium, dissolved | mg/L | MW-16B | 11/08/2000 | | 68.7000 | |
| Sodium, dissolved | mg/L | MW-16B | 01/30/2001 | | 71.9000 | |
| Sodium, dissolved | mg/L | MW-16B | 04/24/2001 | | 72.4000 | |
| Sodium, dissolved | mg/L | MW-16B | 08/28/2001 | | 71.0000 | |
| Sodium, dissolved | mg/L | MW-16B | 11/06/2001 | | 76.4000 | |
| Sodium, dissolved | mg/L | MW-16B | 01/31/2002 | | 69.8000 | |
| Sodium, dissolved | mg/L | MW-16B | 04/09/2002 | | 68.1000 | |
| Sodium, dissolved | mg/L | MW-16B | 07/23/2002 | | 74.1000 | |
| Sodium, dissolved | mg/L | MW-16B | 10/09/2002 | | 72.0000 | |
| Sodium, dissolved | mg/L | MW-16B | 02/25/2003 | | 74.0000 | |
| Sodium, dissolved | mg/L | MW-16B | 05/13/2003 | | 69.0000 | |
| Sodium, dissolved | mg/L | MW-16B | 08/19/2003 | | 69.0000 | |
| Sodium, dissolved | mg/L | MW-16B | 11/18/2003 | | 72.0000 | |
| Sodium, dissolved | mg/L | MW-16B | 04/20/2004 | | 68.0000 | |
| Sodium, dissolved | mg/L | MW-16B | 11/09/2004 | | 80.0000 | |
| Sodium, dissolved | mg/L | MW-16B | 05/24/2005 | | 77.0000 | |
| Sodium, dissolved | mg/L | MW-16B | 10/25/2005 | | 72.0000 | |
| Sodium, dissolved | mg/L | MW-16B | 05/09/2006 | | 68.0000 | |
| Sodium, dissolved | mg/L | MW-16B | 10/17/2006 | | 70.0000 | |
| Sodium, dissolved | mg/L | MW-16B | 05/08/2007 | | 64.0000 | |
| Sodium, dissolved | mg/L | MW-16B | 11/07/2007 | | 60.0000 | |
| Sodium, dissolved | mg/L | MW-16B | 05/20/2008 | | 72.0000 | |
| Sodium, dissolved | mg/L | MW-16B | 11/11/2008 | | 68.0000 | |
| Sodium, dissolved | mg/L | MW-16B | 05/05/2009 | | 69.0000 | |

* - Outlier for that well and constituent.
ND = Not detected, result = detection limit.

# Table 1

## Upgradient Data

| Constituent | Units | Well | Date | | Result | |
|---|---|---|---|---|---|---|
| Sodium, dissolved | mg/L | MW-16B | 11/17/2009 | | 75.0000 | |
| Sodium, dissolved | mg/L | MW-16B | 04/20/2010 | | 75.0000 | |
| Sodium, dissolved | mg/L | MW-16B | 10/05/2010 | | 69.0000 | |
| Sodium, dissolved | mg/L | MW-16B | 04/14/2011 | | 80.0000 | |
| Sodium, dissolved | mg/L | MW-16B | 11/02/2011 | | 68.0000 | |
| Sodium, dissolved | mg/L | MW-16B | 05/02/2012 | | 65.0000 | |
| Sodium, dissolved | mg/L | MW-16B | 11/13/2012 | | 69.0000 | |
| Sulfate | mg/L | MW-16B | 04/01/1997 | | 1.7000 | |
| Sulfate | mg/L | MW-16B | 05/19/1997 | | 5.8000 | |
| Sulfate | mg/L | MW-16B | 09/12/1997 | | 6.4000 | |
| Sulfate | mg/L | MW-16B | 12/22/1997 | | 5.2000 | |
| Sulfate | mg/L | MW-16B | 03/18/1998 | | 3.8000 | |
| Sulfate | mg/L | MW-16B | 06/11/1998 | | 3.4000 | |
| Sulfate | mg/L | MW-16B | 08/21/1998 | | 6.2000 | |
| Sulfate | mg/L | MW-16B | 12/17/1998 | | 4.0000 | |
| Sulfate | mg/L | MW-16B | 03/26/1999 | | 5.4000 | |
| Sulfate | mg/L | MW-16B | 06/17/1999 | | 5.9000 | |
| Sulfate | mg/L | MW-16B | 12/13/1999 | | 5.0000 | |
| Sulfate | mg/L | MW-16B | 02/09/2000 | | 7.6000 | |
| Sulfate | mg/L | MW-16B | 05/25/2000 | | 10.6000 | |
| Sulfate | mg/L | MW-16B | 08/22/2000 | | 3.8000 | |
| Sulfate | mg/L | MW-16B | 11/08/2000 | | 4.4000 | |
| Sulfate | mg/L | MW-16B | 01/30/2001 | | 4.9000 | |
| Sulfate | mg/L | MW-16B | 04/24/2001 | | 4.6000 | |
| Sulfate | mg/L | MW-16B | 08/28/2001 | | 4.8000 | |
| Sulfate | mg/L | MW-16B | 11/06/2001 | | 4.7000 | |
| Sulfate | mg/L | MW-16B | 01/31/2002 | | 4.7000 | |
| Sulfate | mg/L | MW-16B | 04/09/2002 | | 5.0000 | |
| Sulfate | mg/L | MW-16B | 07/23/2002 | | 4.9000 | |
| Sulfate | mg/L | MW-16B | 10/09/2002 | | 4.7000 | |
| Sulfate | mg/L | MW-16B | 02/25/2003 | | 4.4000 | |
| Sulfate | mg/L | MW-16B | 05/13/2003 | | 4.2000 | |
| Sulfate | mg/L | MW-16B | 08/19/2003 | | 4.4000 | |
| Sulfate | mg/L | MW-16B | 11/18/2003 | | 5.0000 | |
| Sulfate | mg/L | MW-16B | 04/20/2004 | | 3.4000 | |
| Sulfate | mg/L | MW-16B | 11/09/2004 | | 5.4000 | |
| Sulfate | mg/L | MW-16B | 05/24/2005 | | 3.5000 | |
| Sulfate | mg/L | MW-16B | 10/25/2005 | | 4.4000 | |
| Sulfate | mg/L | MW-16B | 05/09/2006 | | 3.3000 | |
| Sulfate | mg/L | MW-16B | 10/17/2006 | | 4.1000 | |
| Sulfate | mg/L | MW-16B | 05/08/2007 | | 3.3000 | |
| Sulfate | mg/L | MW-16B | 11/07/2007 | | 4.1000 | |
| Sulfate | mg/L | MW-16B | 05/20/2008 | | 3.8000 | |
| Sulfate | mg/L | MW-16B | 11/11/2008 | | 4.4000 | |

* - Outlier for that well and constituent.
ND = Not detected, result = detection limit.

# Table 1

## Upgradient Data

| Constituent | Units | Well | Date | | Result | |
|---|---|---|---|---|---|---|
| Sulfate | mg/L | MW-16B | 05/05/2009 | | 3.5000 | |
| Sulfate | mg/L | MW-16B | 11/17/2009 | | 4.0000 | |
| Sulfate | mg/L | MW-16B | 04/20/2010 | | 3.4000 | |
| Sulfate | mg/L | MW-16B | 10/05/2010 | | 3.7000 | |
| Sulfate | mg/L | MW-16B | 04/14/2011 | | 3.5000 | |
| Sulfate | mg/L | MW-16B | 11/02/2011 | | 3.8000 | |
| Sulfate | mg/L | MW-16B | 05/02/2012 | | 3.3000 | |
| Sulfate | mg/L | MW-16B | 11/13/2012 | | 3.8000 | |
| Total dissolved solids (tds) | mg/L | MW-16B | 04/01/1997 | | 587.0000 | |
| Total dissolved solids (tds) | mg/L | MW-16B | 05/19/1997 | | 583.0000 | |
| Total dissolved solids (tds) | mg/L | MW-16B | 09/12/1997 | | 626.0000 | |
| Total dissolved solids (tds) | mg/L | MW-16B | 12/22/1997 | | 603.0000 | |
| Total dissolved solids (tds) | mg/L | MW-16B | 03/18/1998 | | 659.0000 | |
| Total dissolved solids (tds) | mg/L | MW-16B | 06/11/1998 | | 621.0000 | |
| Total dissolved solids (tds) | mg/L | MW-16B | 08/21/1998 | | 141.0000 | * |
| Total dissolved solids (tds) | mg/L | MW-16B | 12/17/1998 | | 616.0000 | |
| Total dissolved solids (tds) | mg/L | MW-16B | 03/26/1999 | | 589.0000 | |
| Total dissolved solids (tds) | mg/L | MW-16B | 06/17/1999 | | 716.0000 | |
| Total dissolved solids (tds) | mg/L | MW-16B | 12/13/1999 | | 642.0000 | |
| Total dissolved solids (tds) | mg/L | MW-16B | 02/09/2000 | | 658.0000 | |
| Total dissolved solids (tds) | mg/L | MW-16B | 05/25/2000 | | 604.0000 | |
| Total dissolved solids (tds) | mg/L | MW-16B | 08/22/2000 | | 517.0000 | |
| Total dissolved solids (tds) | mg/L | MW-16B | 11/08/2000 | | 618.0000 | |
| Total dissolved solids (tds) | mg/L | MW-16B | 01/30/2001 | | 618.0000 | |
| Total dissolved solids (tds) | mg/L | MW-16B | 04/24/2001 | | 790.0000 | |
| Total dissolved solids (tds) | mg/L | MW-16B | 08/28/2001 | | 732.0000 | |
| Total dissolved solids (tds) | mg/L | MW-16B | 11/06/2001 | | 610.0000 | |
| Total dissolved solids (tds) | mg/L | MW-16B | 01/31/2002 | | 633.0000 | |
| Total dissolved solids (tds) | mg/L | MW-16B | 04/09/2002 | | 769.0000 | |
| Total dissolved solids (tds) | mg/L | MW-16B | 07/23/2002 | | 720.0000 | |
| Total dissolved solids (tds) | mg/L | MW-16B | 10/09/2002 | | 640.0000 | |
| Total dissolved solids (tds) | mg/L | MW-16B | 02/25/2003 | | 640.0000 | |
| Total dissolved solids (tds) | mg/L | MW-16B | 05/13/2003 | | 700.0000 | |
| Total dissolved solids (tds) | mg/L | MW-16B | 08/19/2003 | | 720.0000 | |
| Total dissolved solids (tds) | mg/L | MW-16B | 11/18/2003 | | 660.0000 | |
| Total dissolved solids (tds) | mg/L | MW-16B | 04/20/2004 | | 610.0000 | |
| Total dissolved solids (tds) | mg/L | MW-16B | 11/09/2004 | | 670.0000 | |
| Total dissolved solids (tds) | mg/L | MW-16B | 05/24/2005 | | 630.0000 | |
| Total dissolved solids (tds) | mg/L | MW-16B | 10/25/2005 | | 650.0000 | |
| Total dissolved solids (tds) | mg/L | MW-16B | 05/09/2006 | | 650.0000 | |
| Total dissolved solids (tds) | mg/L | MW-16B | 10/17/2006 | | 660.0000 | |
| Total dissolved solids (tds) | mg/L | MW-16B | 05/08/2007 | | 600.0000 | |
| Total dissolved solids (tds) | mg/L | MW-16B | 11/07/2007 | | 620.0000 | |
| Total dissolved solids (tds) | mg/L | MW-16B | 05/20/2008 | | 630.0000 | |

* - Outlier for that well and constituent.
ND = Not detected, result = detection limit.

# Table 1

## Upgradient Data

| Constituent | Units | Well | Date | | Result | |
|---|---|---|---|---|---|---|
| Total dissolved solids (tds) | mg/L | MW-16B | 11/11/2008 | | 610.0000 | |
| Total dissolved solids (tds) | mg/L | MW-16B | 05/05/2009 | | 590.0000 | |
| Total dissolved solids (tds) | mg/L | MW-16B | 11/17/2009 | | 590.0000 | |
| Total dissolved solids (tds) | mg/L | MW-16B | 04/20/2010 | | 610.0000 | |
| Total dissolved solids (tds) | mg/L | MW-16B | 10/05/2010 | | 560.0000 | |
| Total dissolved solids (tds) | mg/L | MW-16B | 04/14/2011 | | 610.0000 | |
| Total dissolved solids (tds) | mg/L | MW-16B | 11/02/2011 | | 560.0000 | |
| Total dissolved solids (tds) | mg/L | MW-16B | 05/02/2012 | | 530.0000 | |
| Total dissolved solids (tds) | mg/L | MW-16B | 11/13/2012 | | 580.0000 | |
| Total organic carbon (toc) | mg/L | MW-16B | 04/01/1997 | | 1.5000 | |
| Total organic carbon (toc) | mg/L | MW-16B | 05/19/1997 | | 2.5000 | |
| Total organic carbon (toc) | mg/L | MW-16B | 09/12/1997 | | 1.6000 | |
| Total organic carbon (toc) | mg/L | MW-16B | 12/22/1997 | | 1.3000 | |
| Total organic carbon (toc) | mg/L | MW-16B | 03/18/1998 | | 1.5000 | |
| Total organic carbon (toc) | mg/L | MW-16B | 06/11/1998 | ND | 1.0000 | |
| Total organic carbon (toc) | mg/L | MW-16B | 08/21/1998 | | 1.2000 | |
| Total organic carbon (toc) | mg/L | MW-16B | 12/17/1998 | | 0.9000 | |
| Total organic carbon (toc) | mg/L | MW-16B | 03/26/1999 | ND | 1.0000 | |
| Total organic carbon (toc) | mg/L | MW-16B | 06/17/1999 | | 3.4000 | |
| Total organic carbon (toc) | mg/L | MW-16B | 12/13/1999 | | 1.3000 | |
| Total organic carbon (toc) | mg/L | MW-16B | 02/09/2000 | | 1.3000 | |
| Total organic carbon (toc) | mg/L | MW-16B | 05/25/2000 | | 1.5000 | |
| Total organic carbon (toc) | mg/L | MW-16B | 08/22/2000 | | 1.1000 | |
| Total organic carbon (toc) | mg/L | MW-16B | 11/08/2000 | | 1.7000 | |
| Total organic carbon (toc) | mg/L | MW-16B | 01/30/2001 | | 2.6000 | |
| Total organic carbon (toc) | mg/L | MW-16B | 04/24/2001 | | 2.2000 | |
| Total organic carbon (toc) | mg/L | MW-16B | 08/28/2001 | | 1.1000 | |
| Total organic carbon (toc) | mg/L | MW-16B | 11/06/2001 | | 1.8000 | |
| Total organic carbon (toc) | mg/L | MW-16B | 01/31/2002 | | 1.7000 | |
| Total organic carbon (toc) | mg/L | MW-16B | 04/09/2002 | | 2.0000 | |
| Total organic carbon (toc) | mg/L | MW-16B | 07/23/2002 | | 2.3000 | |
| Total organic carbon (toc) | mg/L | MW-16B | 10/09/2002 | | 1.1000 | |
| Total organic carbon (toc) | mg/L | MW-16B | 02/25/2003 | | 1.1000 | |
| Total organic carbon (toc) | mg/L | MW-16B | 05/13/2003 | ND | 1.0000 | |
| Total organic carbon (toc) | mg/L | MW-16B | 08/19/2003 | | 1.2000 | |
| Total organic carbon (toc) | mg/L | MW-16B | 11/18/2003 | ND | 1.0000 | |
| Total organic carbon (toc) | mg/L | MW-16B | 04/20/2004 | | 2.8000 | |
| Total organic carbon (toc) | mg/L | MW-16B | 11/09/2004 | | 2.5000 | |
| Total organic carbon (toc) | mg/L | MW-16B | 05/24/2005 | | 1.1000 | |
| Total organic carbon (toc) | mg/L | MW-16B | 10/25/2005 | ND | 1.0000 | |
| Total organic carbon (toc) | mg/L | MW-16B | 05/09/2006 | | 2.1000 | |
| Total organic carbon (toc) | mg/L | MW-16B | 10/17/2006 | ND | 1.0000 | |
| Total organic carbon (toc) | mg/L | MW-16B | 05/08/2007 | ND | 1.0000 | |
| Total organic carbon (toc) | mg/L | MW-16B | 11/07/2007 | ND | 1.0000 | |

* - Outlier for that well and constituent.
ND = Not detected, result = detection limit.

# Table 1

## Upgradient Data

| Constituent | Units | Well | Date | | Result | |
|---|---|---|---|---|---|---|
| Total organic carbon (toc) | mg/L | MW-16B | 05/20/2008 | | 1.2000 | |
| Total organic carbon (toc) | mg/L | MW-16B | 11/11/2008 | | 1.3000 | |
| Total organic carbon (toc) | mg/L | MW-16B | 05/05/2009 | | 1.2000 | |
| Total organic carbon (toc) | mg/L | MW-16B | 11/17/2009 | | 1.1000 | |
| Total organic carbon (toc) | mg/L | MW-16B | 04/20/2010 | | 1.2000 | |
| Total organic carbon (toc) | mg/L | MW-16B | 10/05/2010 | | 1.0000 | |
| Total organic carbon (toc) | mg/L | MW-16B | 04/14/2011 | | 1.0000 | |
| Total organic carbon (toc) | mg/L | MW-16B | 11/02/2011 | | 1.2000 | |
| Total organic carbon (toc) | mg/L | MW-16B | 05/02/2012 | | 1.2000 | |
| Total organic carbon (toc) | mg/L | MW-16B | 11/13/2012 | | 1.2000 | |

* - Outlier for that well and constituent.
ND = Not detected, result = detection limit.

# Table 2

## Shapiro Wilk Test of Normality for Multiple Groups

| Constituent | N (Detects) | Detect Freq | G raw | G log | Critical Value | Limit Type |
|---|---|---|---|---|---|---|
| Alkalinity, bicarbonate (as caco3) | 44 | 1.000 | 1.484 | 1.205 | 2.326 | normal |
| Magnesium, dissolved | 46 | 1.000 | 1.440 | 1.590 | 2.326 | normal |
| Potassium, dissolved | 36 | 0.800 | 4.139 | 3.580 | 2.326 | nonpar |
| Sodium, dissolved | 46 | 1.000 | 0.221 | 0.283 | 2.326 | normal |
| Sulfate | 45 | 1.000 | 4.182 | 1.965 | 2.326 | lognor |
| Total dissolved solids (tds) | 44 | 1.000 | 1.564 | 0.729 | 2.326 | normal |
| Total organic carbon (toc) | 37 | 0.822 | 3.907 | 3.177 | 2.326 | nonpar |

Fit to distribution is confirmed if G < critical value.
If detection frequency is < 50% nonparametric or Poisson limit is used

# Table 3

## Summary Statistics and Prediction Limits

| Constituent | Units | Model Type | N | Detect | Mean | SD | Pred Limit | Conf* |
|---|---|---|---|---|---|---|---|---|
| Alkalinity, bicarbonate (as caco3) | mg/L | normal | 44 | 44 | 346.0227 | 17.1972 | 388.0435 | |
| Magnesium, dissolved | mg/L | normal | 46 | 46 | 37.7239 | 2.6638 | 44.2187 | |
| Potassium, dissolved | mg/L | nonpar | 45 | 36 | | | 0.9300 | 0.99 |
| Sodium, dissolved | mg/L | normal | 46 | 46 | 71.4217 | 4.1695 | 81.5874 | |
| Sulfate | mg/L | lognor | 45 | 45 | 1.4740 | 0.2769 | 8.5833 | |
| Total dissolved solids (tds) | mg/L | normal | 44 | 44 | 632.5227 | 56.7969 | 771.3039 | |
| Total organic carbon (toc) | mg/L | nonpar | 45 | 37 | | | 2.8000 | 0.99 |

* - Confidence level for passing initial test or one verification resample at all downgradient wells for a single constituent (nonparametric test only).
Model Type refers to type of prediction limit.
For lognormal limit, mean and sd in natural log units and prediction limit in original units.
All sample sizes and statistics are based on outlier free data.
For nonparametric limits, median reporting limits are substituted for extreme reporting limit values.

## Worksheet 1

## Alkalinity, bicarbonate (as caco3) (mg/L)

## Normal Prediction Limit

| Step | Equation | Description |
|---|---|---|
| 1 | $\overline{X}$ = **sum[X]** / **N**<br>= **15225.0** / **44**<br>= **346.023** | Compute upgradient mean. |
| 2 | S = ( (**sum[X$^2$]** - **sum[X]**$^2$/**N**) / (**N**-1) )$^{½}$<br>= ( (**5.28**x**10$^6$** - **2.32**x**10$^8$**/**44**) / (**44**-1) )$^{½}$<br>= **17.197** | Compute upgradient sd. |
| 3 | alpha = min[ (1-.95$^{1/K}$)$^{½}$ or .01 ]<br>= min[ (1-.95$^{1/7}$)$^{½}$ or .01 ]<br>= **0.01** | Adjusted per comparison false positive rate. Pass initial or 1 resample. |
| 4 | PL = $\overline{X}$ + **tS**(1+1/**N**)$^{½}$<br>= **346.023** + (**2.416***17.197)(1+1/**44**)$^{½}$<br>= **388.044** | One-sided normal prediction limit (t is Student's t on N-1 degrees of freedom and 1-alpha confidence level). |

## Worksheet 2

## Magnesium, dissolved (mg/L)

## Normal Prediction Limit

| Step | Equation | Description |
|---|---|---|
| 1 | $\overline{X}$ = **sum[X] / N**<br>= **1735.3 / 46**<br>= **37.724** | Compute upgradient mean. |
| 2 | S = ( (**sum[X$^2$] - sum[X]$^2$/N**) / (**N**-1) )$^{½}$<br>= ( (**65781.63 - 3.01**x**10$^6$/46**) / (**46**-1) )$^{½}$<br>= **2.664** | Compute upgradient sd. |
| 3 | alpha = min[ (1-.95$^{1/K}$)$^{½}$ or .01 ]<br>= min[ (1-.95$^{1/7}$)$^{½}$ or .01 ]<br>= **0.01** | Adjusted per comparison false positive rate. Pass initial or 1 resample. |
| 4 | PL = $\overline{\mathbf{X}}$ + **tS**(1+1/**N**)$^{½}$<br>= **37.724** + (**2.412***2.664)(1+1/**46**)$^{½}$<br>= **44.219** | One-sided normal prediction limit (t is Student's t on N-1 degrees of freedom and 1-alpha confidence level). |

## Worksheet 3

## Potassium, dissolved (mg/L)

## Nonparametric Prediction Limit

| Step | Equation | Description |
|---|---|---|
| 1 | PL = 2nd max(X)<br>= 0.93 | Compute nonparametric prediction limit as 2nd largest background det value. |
| 2 | Confidence = **0.99** | Confidence level is based on N, K and resampling strategy (see Gibbons 1994). |

## Worksheet 4

## Sodium, dissolved (mg/L)

## Normal Prediction Limit

| Step | Equation | Description |
|---|---|---|
| 1 | $\overline{X}$ = **sum[X] / N**<br>= **3285.4 / 46**<br>= **71.422** | Compute upgradient mean. |
| 2 | S = ( (**sum[X$^2$]** - **sum[X]**$^2$/**N**) / (**N**-1) )$^{½}$<br>= ( (**235431.28** - **1.08**x**10$^7$/46**) / (**46**-1) )$^{½}$<br>= **4.169** | Compute upgradient sd. |
| 3 | alpha = min[ (1-.95$^{1/K}$)$^{½}$ or .01 ]<br>= min[ (1-.95$^{1/7}$)$^{½}$ or .01 ]<br>= **0.01** | Adjusted per comparison false positive rate. Pass initial or 1 resample. |
| 4 | PL = $\overline{X}$ + **tS**(1+1/**N**)$^{½}$<br>= **71.422** + (**2.412***4.169)(1+1/**46**)$^{½}$<br>= **81.587** | One-sided normal prediction limit (t is Student's t on N-1 degrees of freedom and 1-alpha confidence level). |

## Worksheet 5

## Sulfate (mg/L)

## Lognormal Prediction Limit

| Step | Equation | Description |
|---|---|---|
| 1 | $Y = \log_e(X)$ | Transform to natural logarithmic scale. |
| 2 | $\overline{Y}$ = **sum[Y]** / **N**<br>= **66.331** / **45**<br>= **1.474** | Compute mean on a natural log scale. |
| 3 | $S_Y = ( (\mathbf{sum[Y^2]} - \mathbf{sum[Y]}^2/\mathbf{N}) / (\mathbf{N}-1) )^{1/2}$<br>$= ( (\mathbf{101.147} - \mathbf{4399.839}/\mathbf{45}) / (\mathbf{45}-1) )^{1/2}$<br>= **0.277** | Compute sd on a natural log scale. |
| 4 | alpha = min[ $(1-.95^{1/\mathbf{K}})^{1/2}$ or .01 ]<br>= min[ $(1-.95^{1/\mathbf{7}})^{1/2}$ or .01 ]<br>= **0.01** | Adjusted per comparison false positive rate. Pass initial or 1 resample. |
| 5 | PL = $\exp[\overline{\mathbf{Y}} + \mathbf{tS_Y}(1+1/\mathbf{N})^{1/2}]$<br>$= \exp[\mathbf{1.474} + (\mathbf{2.414}*\mathbf{0.277})(1+1/\mathbf{45})^{1/2}]$<br>= **8.583** | One-sided lognormal prediction limit (t is Student's t on N-1 degrees of freedom and 1-alpha confidence level). |

## Worksheet 6

## Total dissolved solids (tds) (mg/L)

## Normal Prediction Limit

| Step | Equation | Description |
|---|---|---|
| 1 | $\overline{X}$ = **sum[X] / N**<br>= **27831.0** / **44**<br>= **632.523** | Compute upgradient mean. |
| 2 | S = ( (**sum[X$^2$]** - **sum[X]**$^2$/**N**) / (**N**-1) )$^{½}$<br>= ( (**1.77**x**10$^7$** - **7.75**x**10$^8$**/**44**) / (**44**-1) )$^{½}$<br>= **56.797** | Compute upgradient sd. |
| 3 | alpha = min[ (1-.95$^{1/K}$)$^{½}$ or .01 ]<br>= min[ (1-.95$^{1/7}$)$^{½}$ or .01 ]<br>= **0.01** | Adjusted per comparison false positive rate. Pass initial or 1 resample. |
| 4 | PL = $\overline{X}$ + **tS**(1+1/**N**)$^{½}$<br>= **632.523** + (**2.416***56.797)(1+1/**44**)$^{½}$<br>= **771.304** | One-sided normal prediction limit (t is Student's t on N-1 degrees of freedom and 1-alpha confidence level). |

## Worksheet 7

## Total organic carbon (toc) (mg/L)

## Nonparametric Prediction Limit

| Step | Equation | Description |
|---|---|---|
| 1 | PL = 2nd max(X)<br>= 2**.8** | Compute nonparametric prediction limit as 2nd largest background det value. |
| 2 | Confidence = **0.99** | Confidence level is based on N, K and resampling strategy (see Gibbons 1994). |

**MW-21B**

# Table 1

## Upgradient Data

| Constituent | Units | Well | Date | | Result | |
|---|---|---|---|---|---|---|
| Alkalinity, bicarbonate (as caco3) | mg/L | MW-21B | 01/31/2001 | | 304.0000 | |
| Alkalinity, bicarbonate (as caco3) | mg/L | MW-21B | 04/25/2001 | | 299.0000 | |
| Alkalinity, bicarbonate (as caco3) | mg/L | MW-21B | 08/28/2001 | | 340.0000 | |
| Alkalinity, bicarbonate (as caco3) | mg/L | MW-21B | 11/06/2001 | | 214.0000 | |
| Alkalinity, bicarbonate (as caco3) | mg/L | MW-21B | 01/30/2002 | | 64.9000 | * |
| Alkalinity, bicarbonate (as caco3) | mg/L | MW-21B | 04/10/2002 | | 247.0000 | |
| Alkalinity, bicarbonate (as caco3) | mg/L | MW-21B | 07/24/2002 | | 258.0000 | |
| Alkalinity, bicarbonate (as caco3) | mg/L | MW-21B | 10/08/2002 | | 230.0000 | |
| Alkalinity, bicarbonate (as caco3) | mg/L | MW-21B | 02/26/2003 | | 240.0000 | |
| Alkalinity, bicarbonate (as caco3) | mg/L | MW-21B | 05/14/2003 | | 240.0000 | |
| Alkalinity, bicarbonate (as caco3) | mg/L | MW-21B | 08/20/2003 | | 240.0000 | |
| Alkalinity, bicarbonate (as caco3) | mg/L | MW-21B | 11/19/2003 | | 280.0000 | |
| Alkalinity, bicarbonate (as caco3) | mg/L | MW-21B | 04/21/2004 | | 240.0000 | |
| Alkalinity, bicarbonate (as caco3) | mg/L | MW-21B | 11/10/2004 | | 270.0000 | |
| Alkalinity, bicarbonate (as caco3) | mg/L | MW-21B | 05/25/2005 | | 240.0000 | |
| Alkalinity, bicarbonate (as caco3) | mg/L | MW-21B | 10/26/2005 | | 270.0000 | |
| Alkalinity, bicarbonate (as caco3) | mg/L | MW-21B | 05/10/2006 | | 250.0000 | |
| Alkalinity, bicarbonate (as caco3) | mg/L | MW-21B | 10/18/2006 | | 270.0000 | |
| Alkalinity, bicarbonate (as caco3) | mg/L | MW-21B | 05/09/2007 | | 240.0000 | |
| Alkalinity, bicarbonate (as caco3) | mg/L | MW-21B | 11/08/2007 | | 230.0000 | |
| Alkalinity, bicarbonate (as caco3) | mg/L | MW-21B | 05/21/2008 | | 260.0000 | |
| Alkalinity, bicarbonate (as caco3) | mg/L | MW-21B | 11/12/2008 | | 280.0000 | |
| Alkalinity, bicarbonate (as caco3) | mg/L | MW-21B | 05/06/2009 | | 240.0000 | |
| Alkalinity, bicarbonate (as caco3) | mg/L | MW-21B | 11/18/2009 | | 260.0000 | |
| Alkalinity, bicarbonate (as caco3) | mg/L | MW-21B | 04/21/2010 | | 240.0000 | |
| Alkalinity, bicarbonate (as caco3) | mg/L | MW-21B | 10/06/2010 | | 260.0000 | |
| Alkalinity, bicarbonate (as caco3) | mg/L | MW-21B | 04/15/2011 | | 250.0000 | |
| Alkalinity, bicarbonate (as caco3) | mg/L | MW-21B | 11/01/2011 | | 260.0000 | |
| Alkalinity, bicarbonate (as caco3) | mg/L | MW-21B | 05/01/2012 | | 260.0000 | |
| Alkalinity, bicarbonate (as caco3) | mg/L | MW-21B | 11/14/2012 | | 260.0000 | |
| Magnesium, dissolved | mg/L | MW-21B | 01/31/2001 | | 22.5000 | |
| Magnesium, dissolved | mg/L | MW-21B | 04/25/2001 | | 24.1000 | |
| Magnesium, dissolved | mg/L | MW-21B | 08/28/2001 | | 26.0000 | |
| Magnesium, dissolved | mg/L | MW-21B | 11/06/2001 | | 20.8000 | |
| Magnesium, dissolved | mg/L | MW-21B | 01/30/2002 | | 6.1000 | * |
| Magnesium, dissolved | mg/L | MW-21B | 04/10/2002 | | 21.1000 | |
| Magnesium, dissolved | mg/L | MW-21B | 07/24/2002 | | 18.6000 | |
| Magnesium, dissolved | mg/L | MW-21B | 10/08/2002 | | 20.0000 | |
| Magnesium, dissolved | mg/L | MW-21B | 02/26/2003 | | 21.0000 | |
| Magnesium, dissolved | mg/L | MW-21B | 05/14/2003 | | 23.0000 | |
| Magnesium, dissolved | mg/L | MW-21B | 08/20/2003 | | 20.0000 | |
| Magnesium, dissolved | mg/L | MW-21B | 11/19/2003 | | 22.0000 | |
| Magnesium, dissolved | mg/L | MW-21B | 04/21/2004 | | 23.0000 | |
| Magnesium, dissolved | mg/L | MW-21B | 11/10/2004 | | 24.0000 | |

* - Outlier for that well and constituent.
ND = Not detected, result = detection limit.

# Table 1

## Upgradient Data

| Constituent | Units | Well | Date | | Result | |
|---|---|---|---|---|---|---|
| Magnesium, dissolved | mg/L | MW-21B | 05/25/2005 | | 20.0000 | |
| Magnesium, dissolved | mg/L | MW-21B | 10/26/2005 | | 22.0000 | |
| Magnesium, dissolved | mg/L | MW-21B | 05/10/2006 | | 21.0000 | |
| Magnesium, dissolved | mg/L | MW-21B | 10/18/2006 | | 22.0000 | |
| Magnesium, dissolved | mg/L | MW-21B | 05/09/2007 | | 20.0000 | |
| Magnesium, dissolved | mg/L | MW-21B | 11/08/2007 | | 19.0000 | |
| Magnesium, dissolved | mg/L | MW-21B | 05/21/2008 | | 23.0000 | |
| Magnesium, dissolved | mg/L | MW-21B | 11/12/2008 | | 21.0000 | |
| Magnesium, dissolved | mg/L | MW-21B | 05/06/2009 | | 18.0000 | |
| Magnesium, dissolved | mg/L | MW-21B | 11/18/2009 | | 17.0000 | |
| Magnesium, dissolved | mg/L | MW-21B | 04/21/2010 | | 18.0000 | |
| Magnesium, dissolved | mg/L | MW-21B | 10/06/2010 | | 19.0000 | |
| Magnesium, dissolved | mg/L | MW-21B | 04/15/2011 | | 19.0000 | |
| Magnesium, dissolved | mg/L | MW-21B | 11/01/2011 | | 16.0000 | |
| Magnesium, dissolved | mg/L | MW-21B | 05/01/2012 | | 21.0000 | |
| Magnesium, dissolved | mg/L | MW-21B | 11/14/2012 | | 19.0000 | |
| Potassium, dissolved | mg/L | MW-21B | 01/31/2001 | | 0.5600 | |
| Potassium, dissolved | mg/L | MW-21B | 04/25/2001 | | 0.6200 | |
| Potassium, dissolved | mg/L | MW-21B | 08/28/2001 | | 0.5800 | |
| Potassium, dissolved | mg/L | MW-21B | 11/06/2001 | ND | 0.5000 | |
| Potassium, dissolved | mg/L | MW-21B | 01/30/2002 | ND | 0.5000 | |
| Potassium, dissolved | mg/L | MW-21B | 04/10/2002 | ND | 0.5000 | |
| Potassium, dissolved | mg/L | MW-21B | 07/24/2002 | | 1.0000 | |
| Potassium, dissolved | mg/L | MW-21B | 10/08/2002 | ND | 0.5000 | |
| Potassium, dissolved | mg/L | MW-21B | 02/26/2003 | | 1.0000 | |
| Potassium, dissolved | mg/L | MW-21B | 05/14/2003 | | 0.5500 | |
| Potassium, dissolved | mg/L | MW-21B | 08/20/2003 | ND | 0.5000 | |
| Potassium, dissolved | mg/L | MW-21B | 11/19/2003 | ND | 0.5000 | |
| Potassium, dissolved | mg/L | MW-21B | 04/21/2004 | ND | 0.5000 | |
| Potassium, dissolved | mg/L | MW-21B | 11/10/2004 | | 0.6700 | |
| Potassium, dissolved | mg/L | MW-21B | 05/25/2005 | ND | 0.5000 | |
| Potassium, dissolved | mg/L | MW-21B | 10/26/2005 | | 0.6600 | |
| Potassium, dissolved | mg/L | MW-21B | 05/10/2006 | | 0.6100 | |
| Potassium, dissolved | mg/L | MW-21B | 10/18/2006 | | 0.6500 | |
| Potassium, dissolved | mg/L | MW-21B | 05/09/2007 | ND | 0.5000 | |
| Potassium, dissolved | mg/L | MW-21B | 11/08/2007 | ND | 0.5000 | |
| Potassium, dissolved | mg/L | MW-21B | 05/21/2008 | | 0.7400 | |
| Potassium, dissolved | mg/L | MW-21B | 11/12/2008 | | 0.5500 | |
| Potassium, dissolved | mg/L | MW-21B | 05/06/2009 | | 0.9800 | |
| Potassium, dissolved | mg/L | MW-21B | 11/18/2009 | | 0.9200 | |
| Potassium, dissolved | mg/L | MW-21B | 04/21/2010 | | 0.7600 | |
| Potassium, dissolved | mg/L | MW-21B | 10/06/2010 | | 0.7800 | |
| Potassium, dissolved | mg/L | MW-21B | 04/15/2011 | | 0.8200 | |
| Potassium, dissolved | mg/L | MW-21B | 11/01/2011 | | 0.6800 | |

* - Outlier for that well and constituent.
ND = Not detected, result = detection limit.

# Table 1

## Upgradient Data

| Constituent | Units | Well | Date | | Result | |
|---|---|---|---|---|---|---|
| Potassium, dissolved | mg/L | MW-21B | 05/01/2012 | | 0.5700 | |
| Potassium, dissolved | mg/L | MW-21B | 11/14/2012 | | 0.7000 | |
| Sodium, dissolved | mg/L | MW-21B | 01/31/2001 | | 37.1000 | |
| Sodium, dissolved | mg/L | MW-21B | 04/25/2001 | | 35.1000 | |
| Sodium, dissolved | mg/L | MW-21B | 08/28/2001 | | 31.7000 | |
| Sodium, dissolved | mg/L | MW-21B | 11/06/2001 | | 16.8000 | |
| Sodium, dissolved | mg/L | MW-21B | 01/30/2002 | | 10.3000 | * |
| Sodium, dissolved | mg/L | MW-21B | 04/10/2002 | | 26.4000 | |
| Sodium, dissolved | mg/L | MW-21B | 07/24/2002 | | 30.8000 | |
| Sodium, dissolved | mg/L | MW-21B | 10/08/2002 | | 26.0000 | |
| Sodium, dissolved | mg/L | MW-21B | 02/26/2003 | | 27.0000 | |
| Sodium, dissolved | mg/L | MW-21B | 05/14/2003 | | 25.0000 | |
| Sodium, dissolved | mg/L | MW-21B | 08/20/2003 | | 28.0000 | |
| Sodium, dissolved | mg/L | MW-21B | 11/19/2003 | | 32.0000 | |
| Sodium, dissolved | mg/L | MW-21B | 04/21/2004 | | 29.0000 | |
| Sodium, dissolved | mg/L | MW-21B | 11/10/2004 | | 37.0000 | |
| Sodium, dissolved | mg/L | MW-21B | 05/25/2005 | | 36.0000 | |
| Sodium, dissolved | mg/L | MW-21B | 10/26/2005 | | 37.0000 | |
| Sodium, dissolved | mg/L | MW-21B | 05/10/2006 | | 31.0000 | |
| Sodium, dissolved | mg/L | MW-21B | 10/18/2006 | | 25.0000 | |
| Sodium, dissolved | mg/L | MW-21B | 05/09/2007 | | 31.0000 | |
| Sodium, dissolved | mg/L | MW-21B | 11/08/2007 | | 35.0000 | |
| Sodium, dissolved | mg/L | MW-21B | 05/21/2008 | | 31.0000 | |
| Sodium, dissolved | mg/L | MW-21B | 11/12/2008 | | 35.0000 | |
| Sodium, dissolved | mg/L | MW-21B | 05/06/2009 | | 32.0000 | |
| Sodium, dissolved | mg/L | MW-21B | 11/18/2009 | | 42.0000 | |
| Sodium, dissolved | mg/L | MW-21B | 04/21/2010 | | 28.0000 | |
| Sodium, dissolved | mg/L | MW-21B | 10/06/2010 | | 41.0000 | |
| Sodium, dissolved | mg/L | MW-21B | 04/15/2011 | | 35.0000 | |
| Sodium, dissolved | mg/L | MW-21B | 11/01/2011 | | 40.0000 | |
| Sodium, dissolved | mg/L | MW-21B | 05/01/2012 | | 33.0000 | |
| Sodium, dissolved | mg/L | MW-21B | 11/14/2012 | | 41.0000 | |
| Sulfate | mg/L | MW-21B | 01/31/2001 | | 13.6000 | |
| Sulfate | mg/L | MW-21B | 04/25/2001 | | 12.3000 | |
| Sulfate | mg/L | MW-21B | 08/28/2001 | | 1.8000 | |
| Sulfate | mg/L | MW-21B | 11/06/2001 | | 15.3000 | |
| Sulfate | mg/L | MW-21B | 01/30/2002 | | 4.7000 | |
| Sulfate | mg/L | MW-21B | 04/10/2002 | | 10.3000 | |
| Sulfate | mg/L | MW-21B | 07/24/2002 | | 9.5000 | |
| Sulfate | mg/L | MW-21B | 10/08/2002 | | 25.0000 | |
| Sulfate | mg/L | MW-21B | 02/26/2003 | | 1.2000 | |
| Sulfate | mg/L | MW-21B | 05/14/2003 | | 12.0000 | |
| Sulfate | mg/L | MW-21B | 08/20/2003 | | 6.5000 | |
| Sulfate | mg/L | MW-21B | 11/19/2003 | | 3.3000 | |

* - Outlier for that well and constituent.
ND = Not detected, result = detection limit.

# Table 1

## Upgradient Data

| Constituent | Units | Well | Date | | Result | |
|---|---|---|---|---|---|---|
| Sulfate | mg/L | MW-21B | 04/21/2004 | | 15.0000 | |
| Sulfate | mg/L | MW-21B | 11/10/2004 | | 1.9000 | |
| Sulfate | mg/L | MW-21B | 05/25/2005 | | 8.6000 | |
| Sulfate | mg/L | MW-21B | 10/26/2005 | | 1.5000 | |
| Sulfate | mg/L | MW-21B | 05/10/2006 | | 11.0000 | |
| Sulfate | mg/L | MW-21B | 10/18/2006 | | 7.1000 | |
| Sulfate | mg/L | MW-21B | 05/09/2007 | | 7.0000 | |
| Sulfate | mg/L | MW-21B | 11/08/2007 | | 2.2000 | |
| Sulfate | mg/L | MW-21B | 05/21/2008 | | 12.0000 | |
| Sulfate | mg/L | MW-21B | 11/12/2008 | ND | 1.0000 | |
| Sulfate | mg/L | MW-21B | 05/06/2009 | | 5.1000 | |
| Sulfate | mg/L | MW-21B | 11/18/2009 | | 1.1000 | |
| Sulfate | mg/L | MW-21B | 04/21/2010 | ND | 1.0000 | |
| Sulfate | mg/L | MW-21B | 10/06/2010 | | 4.7000 | |
| Sulfate | mg/L | MW-21B | 04/15/2011 | | 5.2000 | |
| Sulfate | mg/L | MW-21B | 11/01/2011 | | 2.1000 | |
| Sulfate | mg/L | MW-21B | 05/01/2012 | ND | 1.0000 | |
| Sulfate | mg/L | MW-21B | 11/14/2012 | ND | 1.0000 | |
| Total dissolved solids (tds) | mg/L | MW-21B | 01/31/2001 | | 351.0000 | |
| Total dissolved solids (tds) | mg/L | MW-21B | 04/25/2001 | | 424.0000 | |
| Total dissolved solids (tds) | mg/L | MW-21B | 08/28/2001 | | 372.0000 | |
| Total dissolved solids (tds) | mg/L | MW-21B | 11/06/2001 | | 223.0000 | |
| Total dissolved solids (tds) | mg/L | MW-21B | 01/30/2002 | | 146.0000 | |
| Total dissolved solids (tds) | mg/L | MW-21B | 04/10/2002 | | 356.0000 | |
| Total dissolved solids (tds) | mg/L | MW-21B | 07/24/2002 | | 288.0000 | |
| Total dissolved solids (tds) | mg/L | MW-21B | 10/08/2002 | | 290.0000 | |
| Total dissolved solids (tds) | mg/L | MW-21B | 02/26/2003 | | 280.0000 | |
| Total dissolved solids (tds) | mg/L | MW-21B | 05/14/2003 | | 320.0000 | |
| Total dissolved solids (tds) | mg/L | MW-21B | 08/20/2003 | | 290.0000 | |
| Total dissolved solids (tds) | mg/L | MW-21B | 11/19/2003 | | 330.0000 | |
| Total dissolved solids (tds) | mg/L | MW-21B | 04/21/2004 | | 300.0000 | |
| Total dissolved solids (tds) | mg/L | MW-21B | 11/10/2004 | | 330.0000 | |
| Total dissolved solids (tds) | mg/L | MW-21B | 05/25/2005 | | 290.0000 | |
| Total dissolved solids (tds) | mg/L | MW-21B | 10/26/2005 | | 300.0000 | |
| Total dissolved solids (tds) | mg/L | MW-21B | 05/10/2006 | | 320.0000 | |
| Total dissolved solids (tds) | mg/L | MW-21B | 10/18/2006 | | 330.0000 | |
| Total dissolved solids (tds) | mg/L | MW-21B | 05/09/2007 | | 300.0000 | |
| Total dissolved solids (tds) | mg/L | MW-21B | 11/08/2007 | | 290.0000 | |
| Total dissolved solids (tds) | mg/L | MW-21B | 05/21/2008 | | 330.0000 | |
| Total dissolved solids (tds) | mg/L | MW-21B | 11/12/2008 | | 320.0000 | |
| Total dissolved solids (tds) | mg/L | MW-21B | 05/06/2009 | | 290.0000 | |
| Total dissolved solids (tds) | mg/L | MW-21B | 11/18/2009 | | 280.0000 | |
| Total dissolved solids (tds) | mg/L | MW-21B | 04/21/2010 | | 270.0000 | |
| Total dissolved solids (tds) | mg/L | MW-21B | 10/06/2010 | | 310.0000 | |

* - Outlier for that well and constituent.
ND = Not detected, result = detection limit.

# Table 1

## Upgradient Data

| Constituent | Units | Well | Date | | Result | |
|---|---|---|---|---|---|---|
| Total dissolved solids (tds) | mg/L | MW-21B | 04/15/2011 | | 280.0000 | |
| Total dissolved solids (tds) | mg/L | MW-21B | 11/01/2011 | | 270.0000 | |
| Total dissolved solids (tds) | mg/L | MW-21B | 05/01/2012 | | 290.0000 | |
| Total dissolved solids (tds) | mg/L | MW-21B | 11/14/2012 | | 290.0000 | |
| Total organic carbon (toc) | mg/L | MW-21B | 01/31/2001 | | 3.3000 | |
| Total organic carbon (toc) | mg/L | MW-21B | 04/25/2001 | | 3.6000 | |
| Total organic carbon (toc) | mg/L | MW-21B | 08/28/2001 | | 3.0000 | |
| Total organic carbon (toc) | mg/L | MW-21B | 11/06/2001 | | 6.0000 | |
| Total organic carbon (toc) | mg/L | MW-21B | 01/30/2002 | | 1.4000 | |
| Total organic carbon (toc) | mg/L | MW-21B | 04/10/2002 | | 4.0000 | |
| Total organic carbon (toc) | mg/L | MW-21B | 07/24/2002 | | 3.6000 | |
| Total organic carbon (toc) | mg/L | MW-21B | 10/08/2002 | | 5.0750 | |
| Total organic carbon (toc) | mg/L | MW-21B | 02/26/2003 | | 2.9000 | |
| Total organic carbon (toc) | mg/L | MW-21B | 05/14/2003 | | 3.7000 | |
| Total organic carbon (toc) | mg/L | MW-21B | 08/20/2003 | | 3.2000 | |
| Total organic carbon (toc) | mg/L | MW-21B | 11/19/2003 | | 2.4000 | |
| Total organic carbon (toc) | mg/L | MW-21B | 04/21/2004 | | 4.7000 | |
| Total organic carbon (toc) | mg/L | MW-21B | 11/10/2004 | | 3.1000 | |
| Total organic carbon (toc) | mg/L | MW-21B | 05/25/2005 | | 3.1000 | |
| Total organic carbon (toc) | mg/L | MW-21B | 10/26/2005 | | 1.8000 | |
| Total organic carbon (toc) | mg/L | MW-21B | 05/10/2006 | | 4.8000 | |
| Total organic carbon (toc) | mg/L | MW-21B | 10/18/2006 | | 4.1000 | |
| Total organic carbon (toc) | mg/L | MW-21B | 05/09/2007 | | 3.2000 | |
| Total organic carbon (toc) | mg/L | MW-21B | 11/08/2007 | | 1.6000 | |
| Total organic carbon (toc) | mg/L | MW-21B | 05/21/2008 | | 3.3000 | |
| Total organic carbon (toc) | mg/L | MW-21B | 11/12/2008 | | 2.4000 | |
| Total organic carbon (toc) | mg/L | MW-21B | 05/06/2009 | | 4.6000 | |
| Total organic carbon (toc) | mg/L | MW-21B | 11/18/2009 | | 2.2000 | |
| Total organic carbon (toc) | mg/L | MW-21B | 04/21/2010 | | 2.5000 | |
| Total organic carbon (toc) | mg/L | MW-21B | 10/06/2010 | | 2.8000 | |
| Total organic carbon (toc) | mg/L | MW-21B | 04/15/2011 | | 3.1000 | |
| Total organic carbon (toc) | mg/L | MW-21B | 11/01/2011 | | 2.4000 | |
| Total organic carbon (toc) | mg/L | MW-21B | 05/01/2012 | | 3.2000 | |
| Total organic carbon (toc) | mg/L | MW-21B | 11/14/2012 | | 2.0000 | |

* - Outlier for that well and constituent.
ND = Not detected, result = detection limit.

# Table 2

## Shapiro Wilk Test of Normality for Multiple Groups

| Constituent | N (Detects) | Detect Freq | G raw | G log | Critical Value | Limit Type |
|---|---|---|---|---|---|---|
| Alkalinity, bicarbonate (as caco3) | 29 | 1.000 | 2.375 | 1.575 | 2.326 | lognor |
| Magnesium, dissolved | 29 | 1.000 | 1.969 | 1.868 | 2.326 | normal |
| Potassium, dissolved | 20 | 0.667 | 2.022 | 1.752 | 2.326 | normal |
| Sodium, dissolved | 29 | 1.000 | 0.143 | 1.654 | 2.326 | normal |
| Sulfate | 26 | 0.867 | 2.072 | 0.846 | 2.326 | normal |
| Total dissolved solids (tds) | 30 | 1.000 | 2.468 | 3.968 | 2.326 | nonpar |
| Total organic carbon (toc) | 30 | 1.000 | 0.057 | 1.374 | 2.326 | normal |

Fit to distribution is confirmed if G < critical value.
If detection frequency is < 50% nonparametric or Poisson limit is used

# Table 3

## Summary Statistics and Prediction Limits

| Constituent | Units | Model Type | N | Detect | Mean | SD | Pred Limit | Conf* |
|---|---|---|---|---|---|---|---|---|
| Alkalinity, bicarbonate (as caco3) | mg/L | lognor | 29 | 29 | 5.5472 | 0.0947 | 325.2751 | |
| Magnesium, dissolved | mg/L | normal | 29 | 29 | 20.7276 | 2.2640 | 26.4079 | |
| Potassium, dissolved | mg/L | normal | 30 | 20 | 0.4800 | 0.3669 | 1.3982 | |
| Sodium, dissolved | mg/L | normal | 29 | 29 | 32.2379 | 5.7349 | 46.6269 | |
| Sulfate | mg/L | normal | 30 | 26 | 6.6667 | 5.9929 | 21.6634 | |
| Total dissolved solids (tds) | mg/L | nonpar | 30 | 30 | | | 372.0000 | 0.99 |
| Total organic carbon (toc) | mg/L | normal | 30 | 30 | 3.2358 | 1.0677 | 5.9076 | |

* - Confidence level for passing initial test or one verification resample at all downgradient wells for a single constituent (nonparametric test only).
Model Type refers to type of prediction limit.
For lognormal limit, mean and sd in natural log units and prediction limit in original units.
All sample sizes and statistics are based on outlier free data.
For nonparametric limits, median reporting limits are substituted for extreme reporting limit values.

## Worksheet 1

## Alkalinity, bicarbonate (as caco3) (mg/L)

## Lognormal Prediction Limit

| Step | Equation | Description |
|---|---|---|
| 1 | $Y = \log_e(X)$ | Transform to natural logarithmic scale. |
| 2 | $\overline{Y}$ = **sum[Y]** / **N**<br>= **160.868** / **29**<br>= **5.547** | Compute mean on a natural log scale. |
| 3 | $S_Y = ( (\textbf{sum[Y}^2\textbf{]} - \textbf{sum[Y]}^2/\textbf{N}) / (\textbf{N}-1) )^{½}$<br>$= ( (\textbf{892.612} - \textbf{25878.471}/\textbf{29}) / (\textbf{29}-1) )^{½}$<br>= **0.095** | Compute sd on a natural log scale. |
| 4 | alpha = min[ $(1-.95^{1/\textbf{K}})^{½}$ or .01 ]<br>= min[ $(1-.95^{1/\textbf{7}})^{½}$ or .01 ]<br>= **0.01** | Adjusted per comparison false positive rate. Pass initial or 1 resample. |
| 5 | $PL = \exp[\overline{\textbf{Y}} + \textbf{tS}_{\textbf{Y}}(1+1/\textbf{N})^{½}]$<br>$= \exp[\textbf{5.547} + (\textbf{2.467}*\textbf{0.095})(1+1/\textbf{29})^{½}]$<br>= **325.275** | One-sided lognormal prediction limit (t is Student's t on N-1 degrees of freedom and 1-alpha confidence level). |

## Worksheet 2

## Magnesium, dissolved (mg/L)

## Normal Prediction Limit

| Step | Equation | Description |
|---|---|---|
| 1 | $\overline{X}$ = **sum[X] / N**<br>= **601.1 / 29**<br>= **20.728** | Compute upgradient mean. |
| 2 | S = ( (**sum[X$^2$]** - **sum[X]**$^2$/**N**) / (**N**-1) )$^{½}$<br>= ( (**12602.87** - **361321.21/29**) / (**29**-1) )$^{½}$<br>= **2.264** | Compute upgradient sd. |
| 3 | alpha = min[ (1-.95$^{1/K}$)$^{½}$ or .01 ]<br>= min[ (1-.95$^{1/7}$)$^{½}$ or .01 ]<br>= **0.01** | Adjusted per comparison false positive rate. Pass initial or 1 resample. |
| 4 | PL = $\overline{X}$ + **tS**(1+1/**N**)$^{½}$<br>= **20.728** + (**2.467*****2.264**)(1+1/**29**)$^{½}$<br>= **26.408** | One-sided normal prediction limit (t is Student's t on N-1 degrees of freedom and 1-alpha confidence level). |

## Worksheet 3

## Potassium, dissolved (mg/L)

## Normal Prediction Limit

| Step | Equation | Description |
|---|---|---|
| 1 | $\overline{X}_1 = \mathbf{sum[X_1]} / \mathbf{N_1}$<br>$= \mathbf{14.4} / \mathbf{20}$<br>$= \mathbf{0.72}$ | Compute mean of $N_1$ detected measurements. |
| 2 | $S_1 = ( (\mathbf{sum[X_1^2]} - \mathbf{sum[X_1]}^2/\mathbf{N_1}) / (\mathbf{N_1}-1) )^{½}$<br>$= ( (\mathbf{10.809} - \mathbf{207.36}/\mathbf{20}) / (\mathbf{20}-1) )^{½}$<br>$= \mathbf{0.152}$ | Compute sd of $N_1$ detected measurements. |
| 3 | $\overline{X} = (1 - \mathbf{N_0}/\mathbf{N})\ \overline{\mathbf{X}}_\mathbf{1}$<br>$= (1 - \mathbf{10}/\mathbf{30})\ \mathbf{0.72}$<br>$= \mathbf{0.48}$ | Compute adjusted mean. |
| 4 | $S = [ (1 - \mathbf{N_0}/\mathbf{N}) * \mathbf{S_1}^2 + (\mathbf{N_0}/\mathbf{N}) ( 1 - (\mathbf{N_0}-1)/(\mathbf{N}-1) ) \overline{\mathbf{X}}_\mathbf{1}^2 ]^{½}$<br>$= [ (1 - \mathbf{10}/\mathbf{30}) * \mathbf{0.152}^2 + (\mathbf{10}/\mathbf{30}) ( 1 - (\mathbf{10}-1)/(\mathbf{30}-1) ) \mathbf{0.72}^2 ]^{½}$<br>$= \mathbf{0.367}$ | Compute adjusted sd. |
| 5 | $\text{alpha} = \min[ (1-.95^{1/\mathbf{K}})^{½} \text{ or } .01 ]$<br>$= \min[ (1-.95^{1/\mathbf{7}})^{½} \text{ or } .01 ]$<br>$= \mathbf{0.01}$ | Adjusted per comparison false positive rate. Pass initial or 1 resample. |
| 6 | $PL = \overline{\mathbf{X}} + \mathbf{tS}(1+1/\mathbf{N})^{½}$<br>$= \mathbf{0.48} + (\mathbf{2.462}*\mathbf{0.367})(1+1/\mathbf{30})^{½}$<br>$= \mathbf{1.398}$ | One-sided normal prediction limit (t is Student's t on N-1 degrees of freedom and 1-alpha confidence level). |

## Worksheet 4

## Sodium, dissolved (mg/L)

## Normal Prediction Limit

| Step | Equation | Description |
|---|---|---|
| 1 | $\overline{X}$ = **sum[X] / N**<br>= **934.9 / 29**<br>= **32.238** | Compute upgradient mean. |
| 2 | S = ( (**sum[X$^2$] - sum[X]$^2$/N**) / (**N**-1) )$^{½}$<br>= ( (**31060.15 - 874038.01/29**) / (**29**-1) )$^{½}$<br>= **5.735** | Compute upgradient sd. |
| 3 | alpha = min[ (1-.95$^{1/K}$)$^{½}$ or .01 ]<br>= min[ (1-.95$^{1/7}$)$^{½}$ or .01 ]<br>= **0.01** | Adjusted per comparison false positive rate. Pass initial or 1 resample. |
| 4 | PL = $\overline{\mathbf{X}}$ + **tS**(1+1/**N**)$^{½}$<br>= **32.238** + (**2.467*****5.735**)(1+1/**29**)$^{½}$<br>= **46.627** | One-sided normal prediction limit (t is Student's t on N-1 degrees of freedom and 1-alpha confidence level). |

## Worksheet 5

## Sulfate (mg/L)

## Normal Prediction Limit

| Step | Equation | Description |
|---|---|---|
| 1 | $\overline{X}_1 = \mathbf{sum[X_1]} / \mathbf{N_1}$<br>$= \mathbf{200.0} / \mathbf{26}$<br>$= \mathbf{7.692}$ | Compute mean of $N_1$ detected measurements. |
| 2 | $S_1 = ( (\mathbf{sum[X_1^2]} - \mathbf{sum[X_1]}^2/\mathbf{N_1}) / (\mathbf{N_1}-1) )^{½}$<br>$= ( (\mathbf{2370.42} - \mathbf{40000.0}/\mathbf{26}) / (\mathbf{26}-1) )^{½}$<br>$= \mathbf{5.769}$ | Compute sd of $N_1$ detected measurements. |
| 3 | $\overline{X} = (1 - \mathbf{N_0}/\mathbf{N}) \overline{\mathbf{X}}_\mathbf{1}$<br>$= (1 - \mathbf{4}/\mathbf{30}) \mathbf{7.692}$<br>$= \mathbf{6.667}$ | Compute adjusted mean. |
| 4 | $S = [ (1 - \mathbf{N_0}/\mathbf{N}) * \mathbf{S_1}^2 + (\mathbf{N_0}/\mathbf{N}) ( 1 - (\mathbf{N_0}-1)/(\mathbf{N}-1) ) \overline{\mathbf{X}}_\mathbf{1}^2 ]^{½}$<br>$= [ (1 - \mathbf{4}/\mathbf{30}) * \mathbf{5.769}^2 + (\mathbf{4}/\mathbf{30}) ( 1 - (\mathbf{4}-1)/(\mathbf{30}-1) ) \mathbf{7.692}^2 ]^{½}$<br>$= \mathbf{5.993}$ | Compute adjusted sd. |
| 5 | $\text{alpha} = \min[ (1-.95^{1/\mathbf{K}})^{½} \text{ or } .01 ]$<br>$= \min[ (1-.95^{1/\mathbf{7}})^{½} \text{ or } .01 ]$<br>$= \mathbf{0.01}$ | Adjusted per comparison false positive rate. Pass initial or 1 resample. |
| 6 | $PL = \overline{\mathbf{X}} + \mathbf{tS}(1+1/\mathbf{N})^{½}$<br>$= \mathbf{6.667} + (\mathbf{2.462}*\mathbf{5.993})(1+1/\mathbf{30})^{½}$<br>$= \mathbf{21.663}$ | One-sided normal prediction limit (t is Student's t on N-1 degrees of freedom and 1-alpha confidence level). |

## Worksheet 6

## Total dissolved solids (tds) (mg/L)

## Nonparametric Prediction Limit

| Step | Equation | Description |
|---|---|---|
| 1 | PL = 2nd max(X)<br>= 372**.0** | Compute nonparametric prediction limit as 2nd largest background det value. |
| 2 | Confidence = **0.99** | Confidence level is based on N, K and resampling strategy (see Gibbons 1994). |

## Worksheet 7

## Total organic carbon (toc) (mg/L)

## Normal Prediction Limit

| Step | Equation | Description |
|---|---|---|
| 1 | $\overline{X}$ = **sum[X]** / **N**<br>= **97.075** / **30**<br>= **3.236** | Compute upgradient mean. |
| 2 | S = ( (**sum[X$^2$]** - **sum[X]**$^2$/**N**) / (**N**-1) )$^{½}$<br>= ( (**347.176** - **9423.556**/**30**) / (**30**-1) )$^{½}$<br>= **1.068** | Compute upgradient sd. |
| 3 | alpha = min[ (1-.95$^{1/K}$)$^{½}$ or .01 ]<br>= min[ (1-.95$^{1/7}$)$^{½}$ or .01 ]<br>= **0.01** | Adjusted per comparison false positive rate. Pass initial or 1 resample. |
| 4 | PL = $\overline{X}$ + **tS**(1+1/**N**)$^{½}$<br>= **3.236** + (**2.462*****1.068**)(1+1/**30**)$^{½}$<br>= **5.908** | One-sided normal prediction limit (t is Student's t on N-1 degrees of freedom and 1-alpha confidence level). |

# Time-Concentration Plots for Iron and Ammonia in Site Compliance Well Groundwater

# Time Series

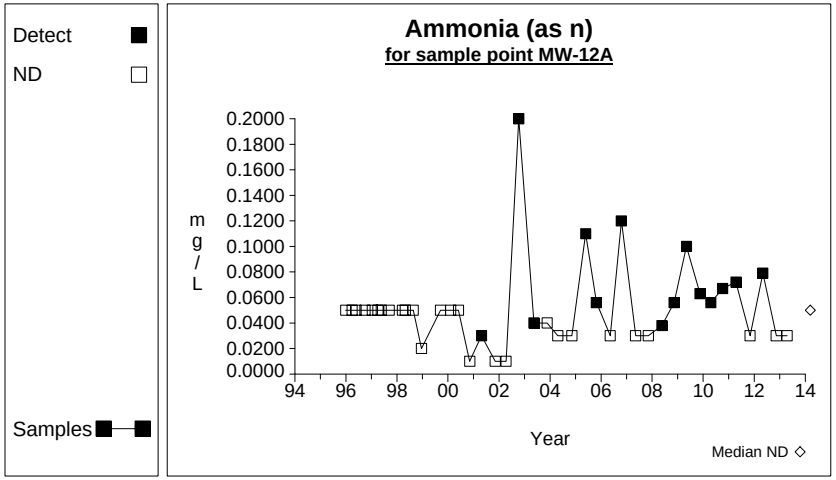


**Graph 1**

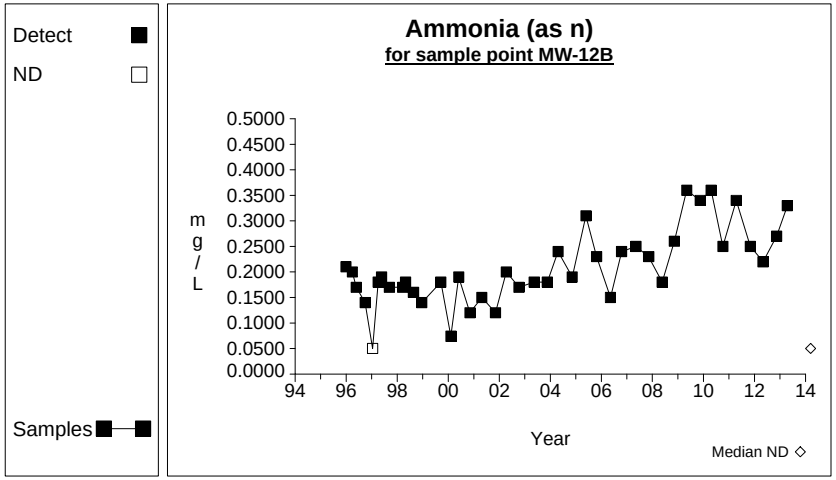


**Graph 2**

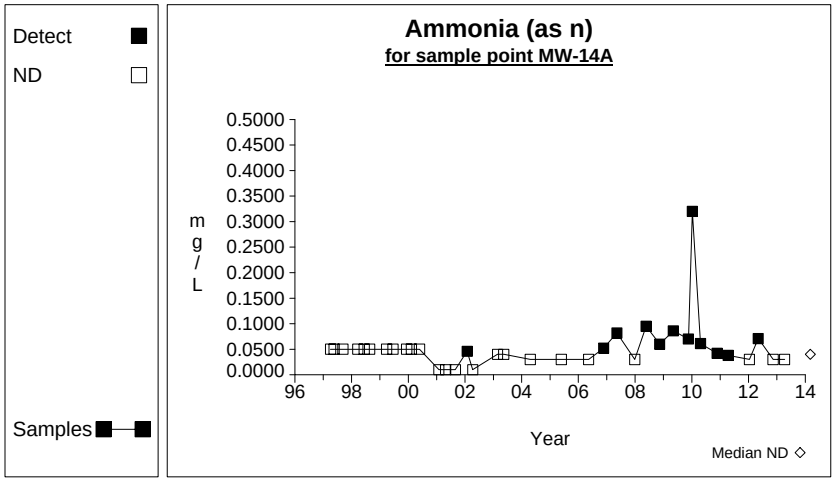


**Graph 3**

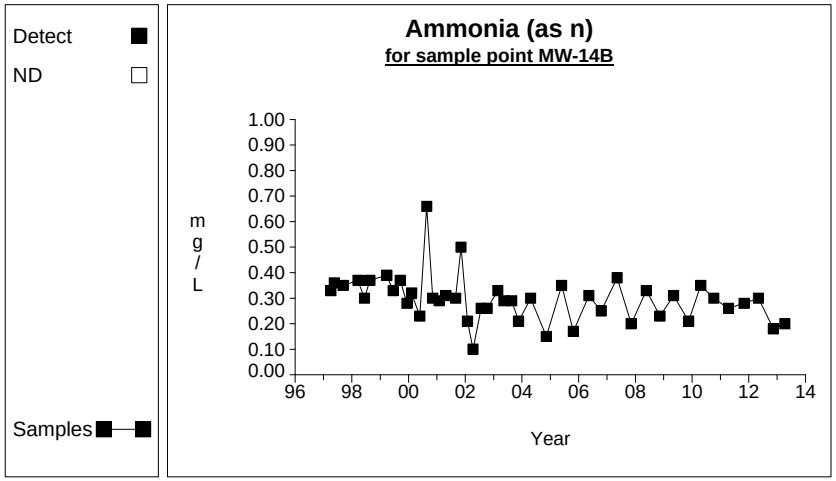


**Graph 4**

# Time Series

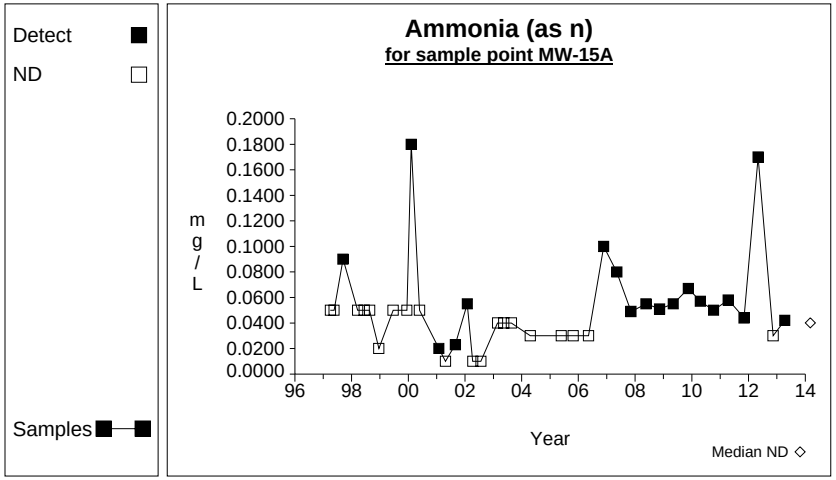


**Graph 5**

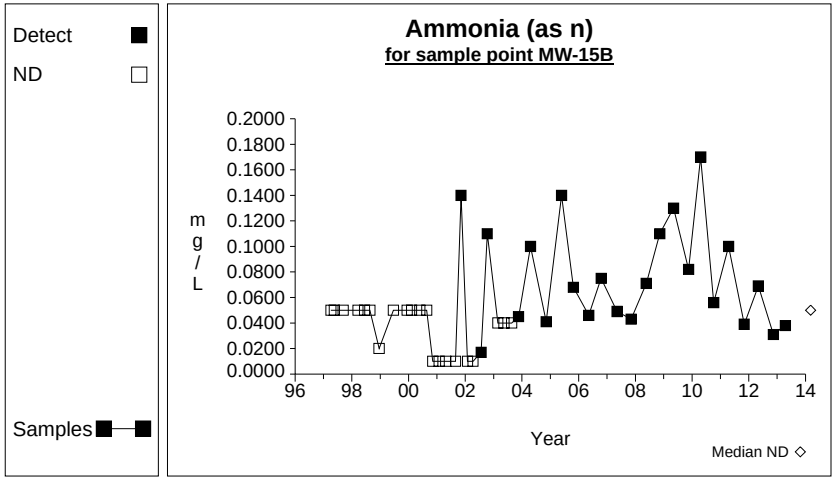


**Graph 6**

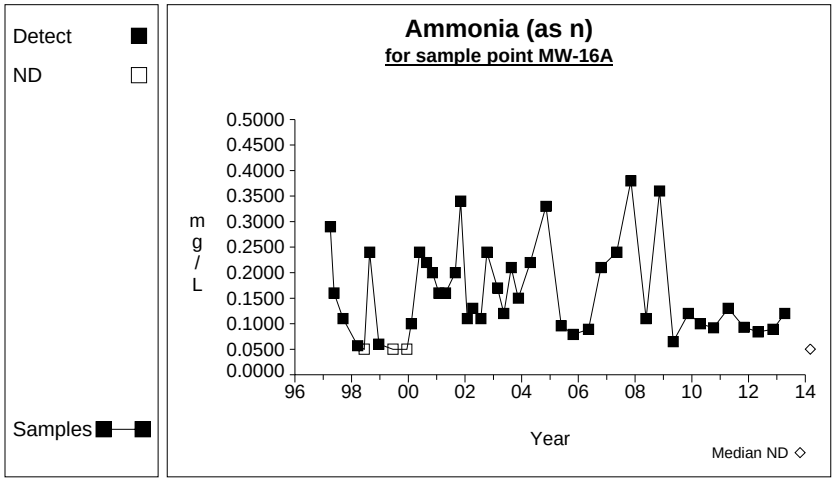


**Graph 7**

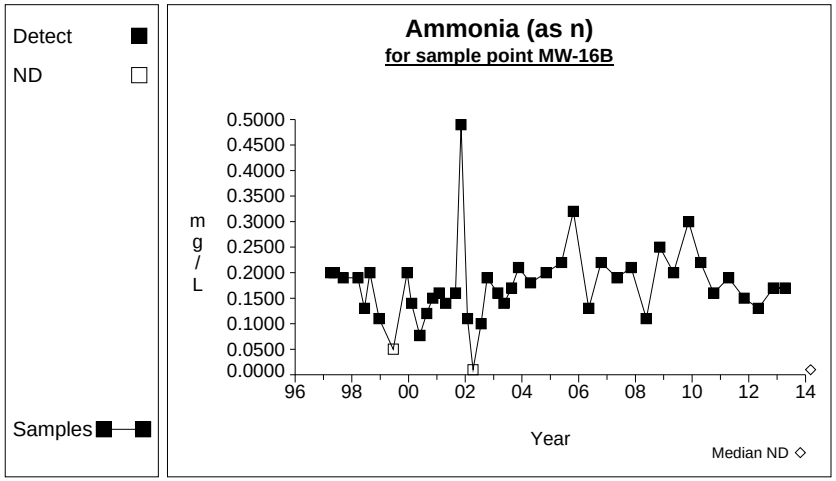


**Graph 8**

# Time Series

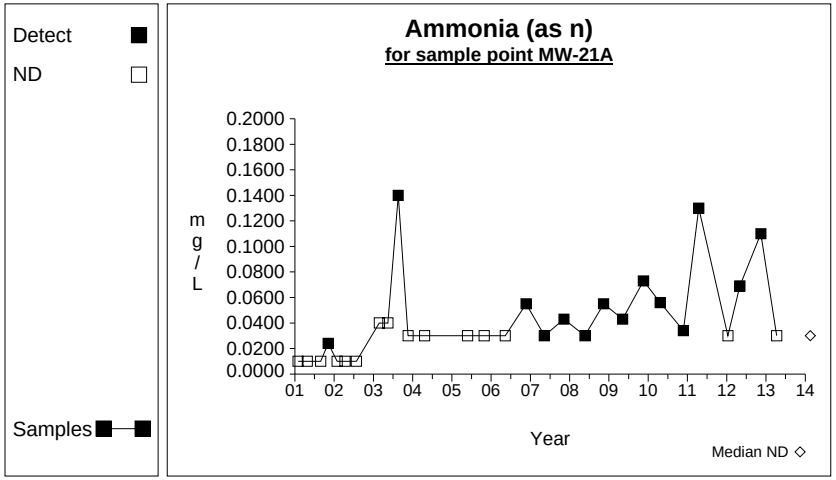


**Graph 9**

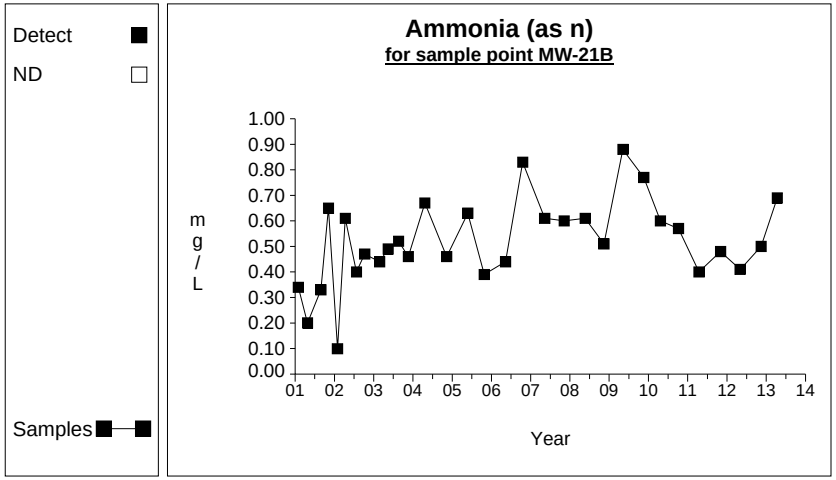


**Graph 10**

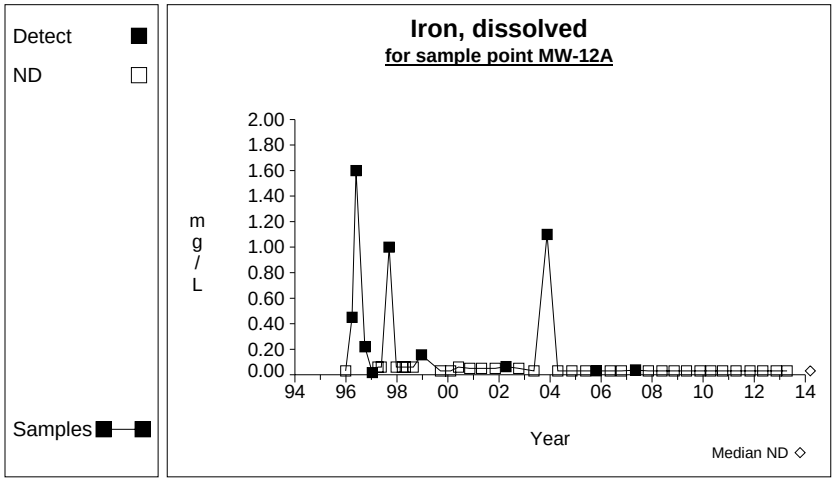


**Graph 11**

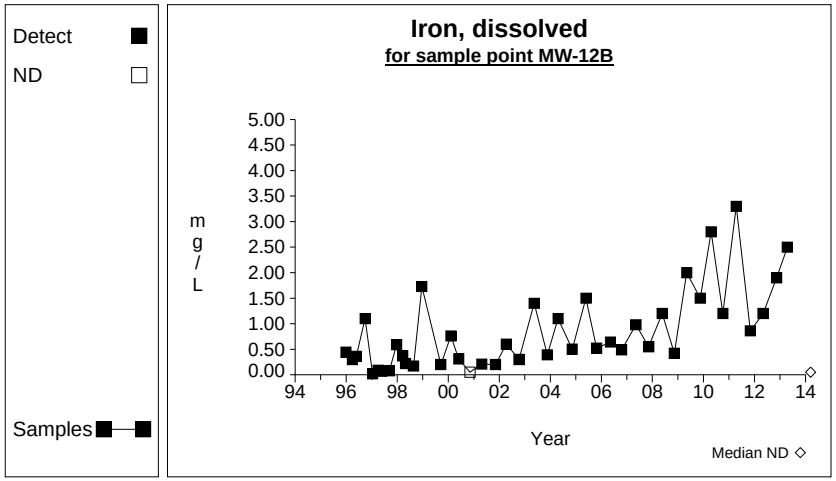


**Graph 12**

# Time Series

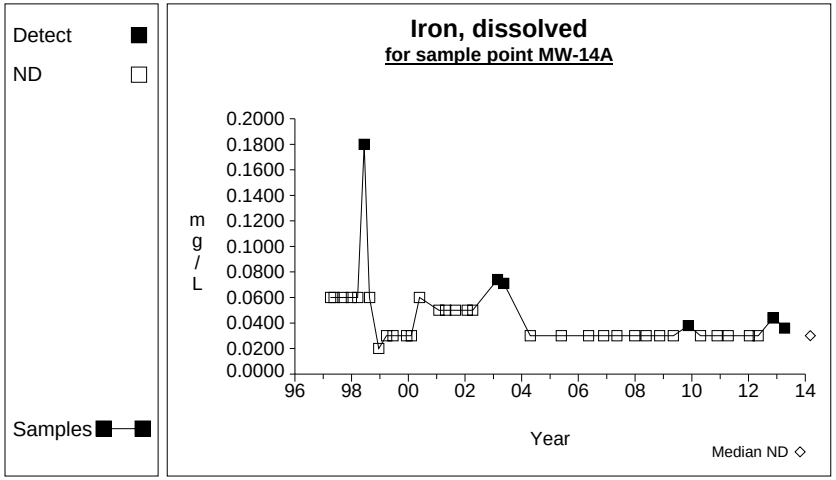


**Graph 13**

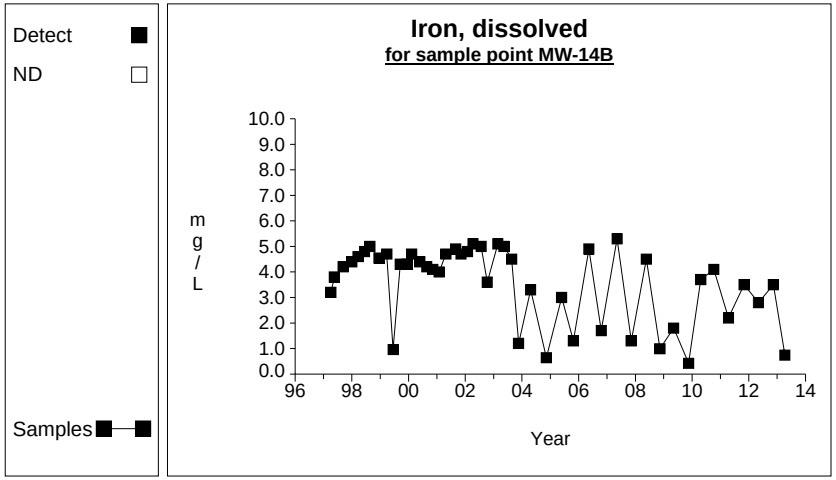


**Graph 14**

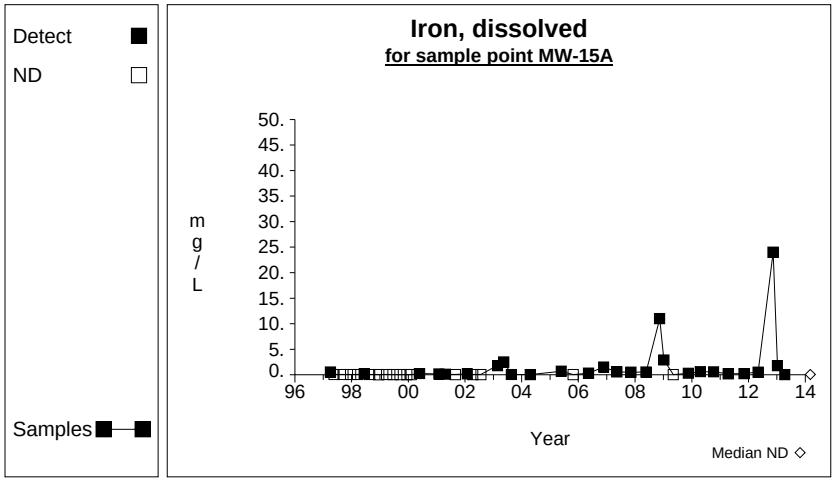


**Graph 15**

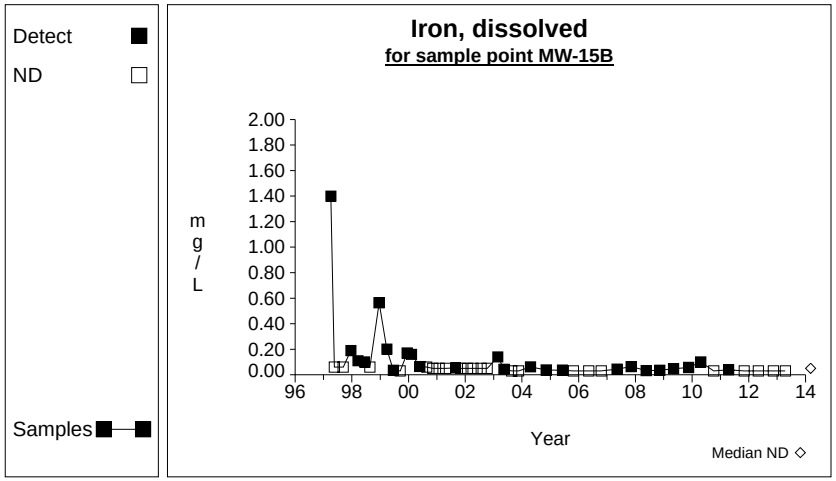


**Graph 16**

# Time Series

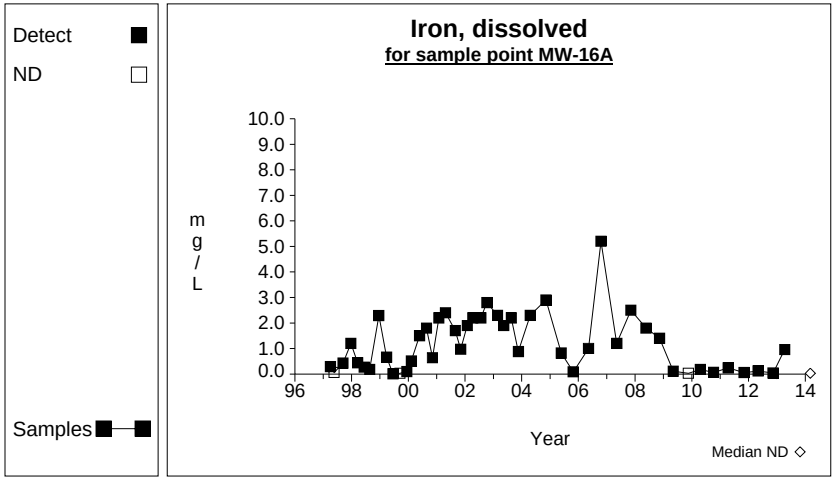


**Graph 17**

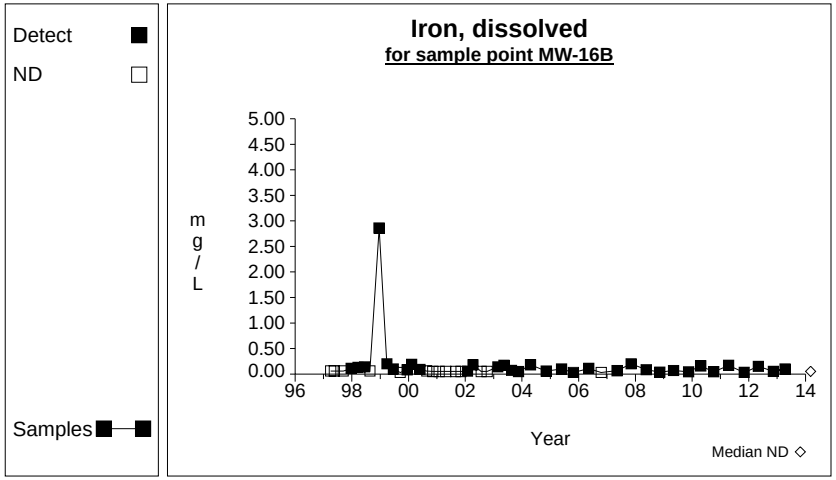


**Graph 18**

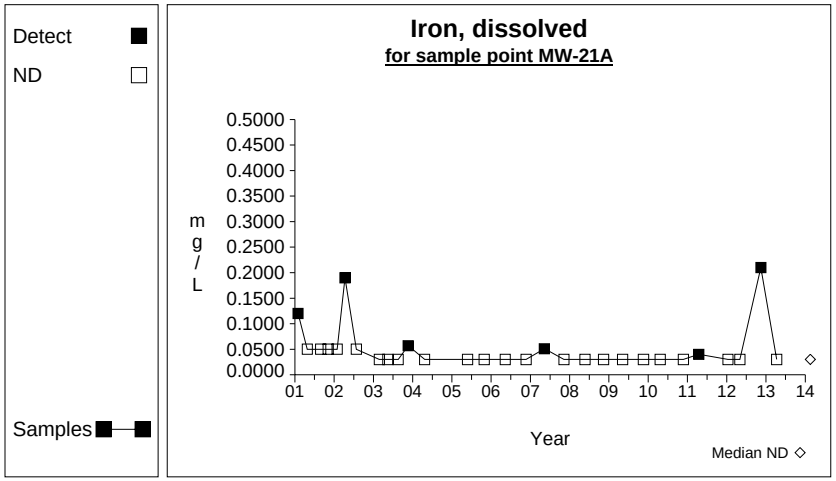


**Graph 19**

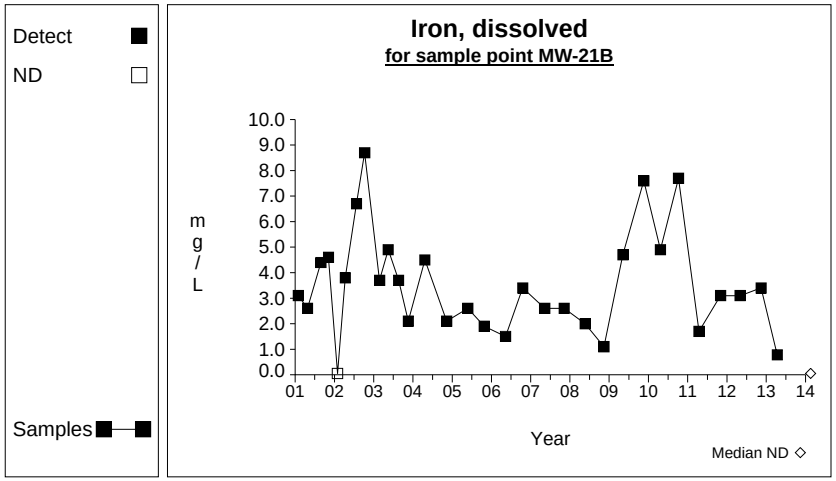


**Graph 20**